REVISIONS					
REV	ECO	DESCRIPTION	DATE	BY	APPR
A1	-	RELEASED DRAWING	Nov-9-17	Rookie	Tommy
A2	-	ADD THE G5 PART NUMBER	Jan-28-19	Blink	Tommy
A3	-	CHANGE HAND CRIMPER	Nov-8-19	Flan	Tommy

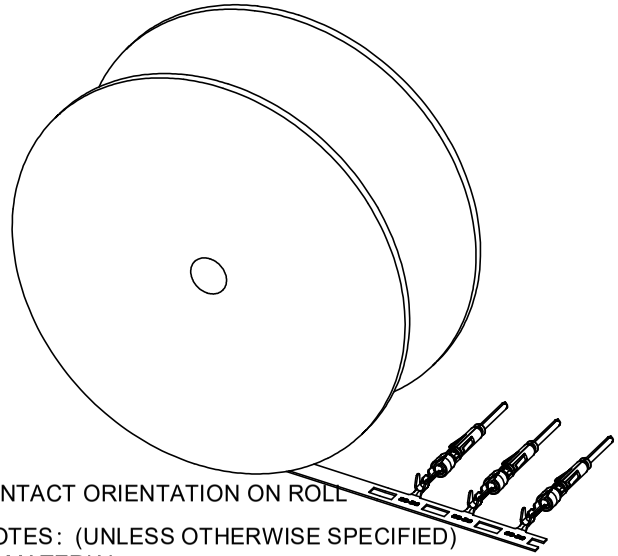

CONTACT ORIENTATION ON ROLL

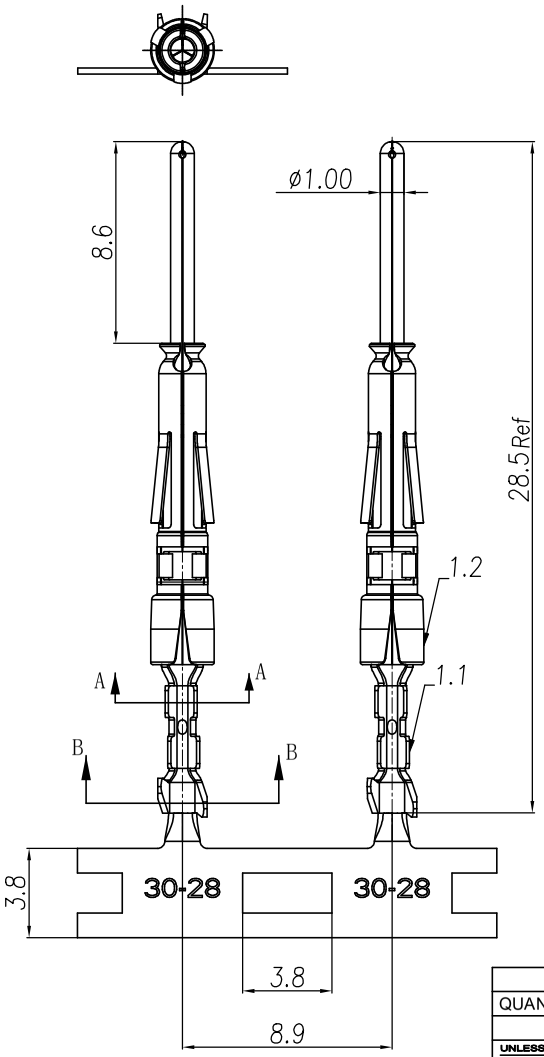

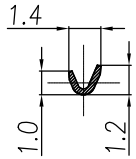

SECTION A-A

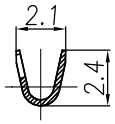

SECTION B-B

NOTES: (UNLESS OTHERWISE SPECIFIED)

1. MATERIAL:
   1.1. CONTACT BODY: COPPER ALLOY.
   1.2. OUTER SPRING: STAINLESS STEEL.
2. SPECIFICATIONS:
   2.1 CURRENT RATING: 5A MAX.
   2.2 TERMINATION TYPE: CRIMPING.
   2.3 WIRE RANGE: 30~28AWG.
   2.4 WIRE INSULATION DIA(MAX): Ø1.8mm.
3. RoHS COMPLIANT.
4. ALL DIMENSIONS ARE FOR REFERENCE USE ONLY.
5. AVAILABLE TOOLS:
   5.1 HAND CRIMPER: MFX-3958. (A3)
   5.2 CRIMP APPLICATOR: MFX-3957.
   5.3 EXTRACTION TOOL: QXRT20.

P/N	CONTACT PLATING(MATING AREA)
SP28W2T	TIN PLATING OVER NICKEL.
SP28W2N	NICKEL PLATING OVER COPPERIZE.
SP28W2F	GOLD FLASH PLATING OVER NICKEL.
(A2) SP28W2G5	5μ"GOLD PLATING OVER NICKEL.
SP28W2G10	10μ"GOLD PLATING OVER NICKEL.
SP28W2G15	15μ"GOLD PLATING OVER NICKEL.
SP28W2G30	30μ"GOLD PLATING OVER NICKEL.

QUANTITY	PART NUMBER	DESCRIPTION	ITEM

MATERIALS LIST

UNLESS OTHERWISE SPECIFIED
1) All dimensions are in metric(mm).
2) Tolerances are as follows:
1 PL DEC ±0.30 | Fractions ±1/64
2 PL DEC ±0.15 | Angles ±1°
3 PL DEC ±0.08
3) Note reference = (X)

MATERIAL SPECIFICATIONS:

PROCESS SPECIFICATIONS:

NEXT ASS'Y:

SIGNATURES		DATE
DRAWN:	Flan	Nov-8-19
CHECKED:	Marlin	Nov-8-19
ENGINEER:		
APPROVAL:	Tommy	Nov-8-19
CUSTOMER:		

THIS DRAWING IS SUPPLIED FOR INFORMATION ONLY. DESIGN FEATURES, SPECIFICATIONS AND PERFORMANCE DATA SHOWN HEREON ARE THE PROPERTY OF THE AMPHENOL CORPORATION. NO RIGHTS OF REPRODUCTION ARE IMPLIED. ALL DIMENSIONS ARE SUBJECT TO NORMAL MANUFACTURING VARIATIONS.

Amphenol
Sine Systems - www.amphenol-sine.com
44724 Morley Drive
Clinton Township, MI 48036

ECO-MATE,PIN CONTACT, STAMPED, 28-30AWG, SIZE 20

SIZE B | TYPE C- | DWG NO: SP28W2XX | REVISION A3

SCALE: NONE | SHEET 1 OF 1

TITLE: ECO-MATE,PIN CONTACT, STAMPED,30-28AWG, SIZE 20
DWG NO: SP28W2XX
REV: A3
SH: 1
OF: 1