Copying of this document and giving it to others and the use or communication of the contents thereof, are forbidden without express authority. Offenders are liable to the payment of damages. All rights are reserved in the event of the grant of a patent or the registration of the utility model or design

Weitergabe sowie Vervielfältigung dieser Unterlage, Verwertung und Mitteilung ihres Inhalts nicht gestattet, soweit nicht ausdrücklich zugestanden. Zuwiderhandlungen verpflichten zu Schadenersatz. Alle Rechte für den Fall der Patenterteilung oder Gebrauchsmuster-Eintragung vorbehalten.

INDUSTRIAL@AMPHENOL
TRUSTED GLOBALLY

Amphenol Global ID	Product Group	Product Type	Function	Additional Information	Color
2CMA102102R1000	Tough&Safe	ABB563B6	Inlet	3P+N+E	Red

Rated Current	Rated Voltage	Clock position	Frequency	Degree of Protection	Housing Material
60A | 63A	200/346 - 240/415 V	6 h	50 Hz | 60 Hz	IP44	Thermoplastic (PBT)

Cable Cross Section	Wire Size	ConnectionType	Mounting Holes	Plug Angle	Product Weight
4 - 16 mm²	12 - 6 AWG	Screw	61x61	Straight	0.53 Kg

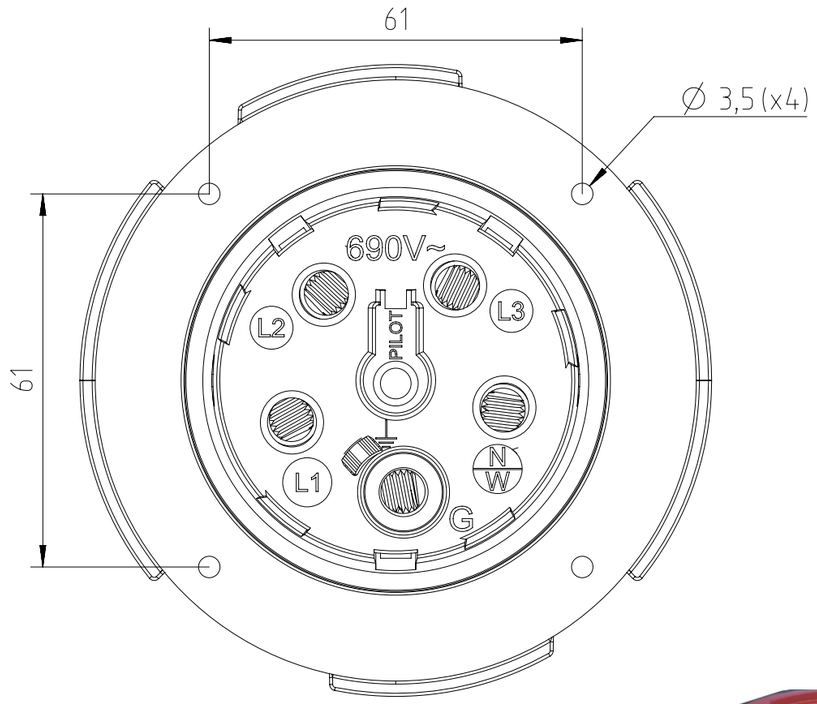

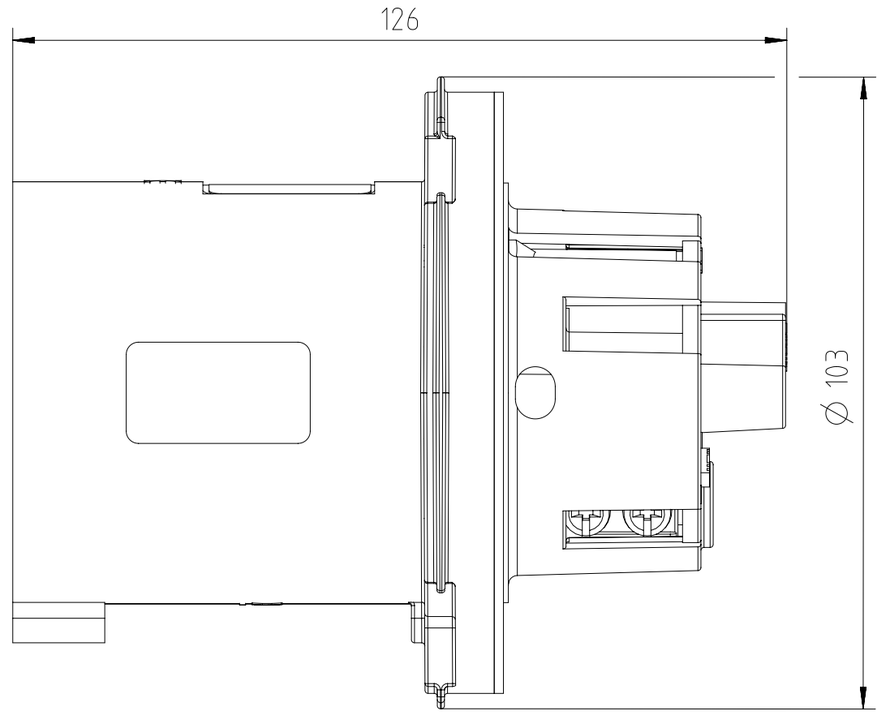

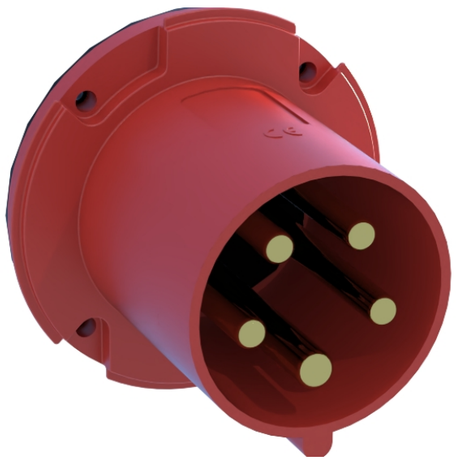

All dimensions are in mm.

IEC 60309

Index	Änderung/ Description	Datum/ Date	Name
01	202400052	19.09.2025	WBEN

Gewicht (errechnet) / Calc WT : 530 g
Prüfmaß / Testdimension
Teileindex / Partindexnumber:
minor change:

Zul. Abw./ Tolerances : ISO 2768-m
DIN / ISO 13715

Gez. Drawn	29.08.2024 WBENHASSINE
Status	Released
Gepr. Checked	08.11.2024 MBERTSCH

Amphenol Tuchel Industrial GmbH

Maßstab / Scale : 1:1 | A3

CUSTOMER DRAWING

ABB563B6

Panel mounted inlet

M 2CMA102102R1000

Blatt/ Sheet 1 | 1 Bl.

Ers. f. / Replacement for :

FAI2024-004003

NXM-V01