REVISIONS					
REV	ECO	DESCRIPTION	DATE	BY	APPR
A1	--	RELEASED DRAWING	Jun-21-2018	Blink	Tommy

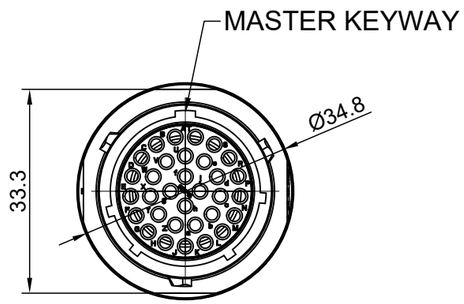

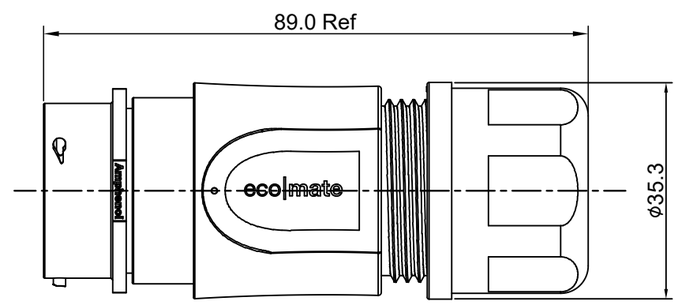

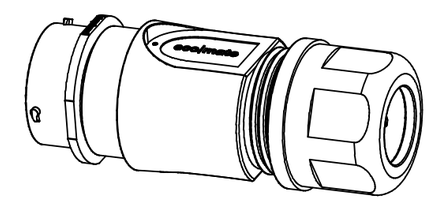

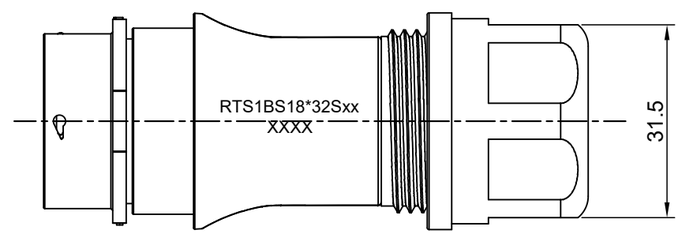

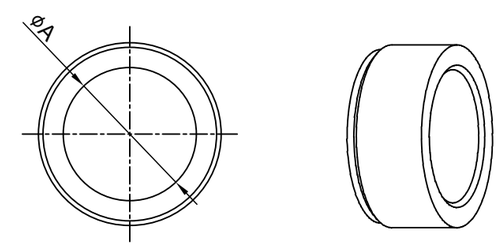

NOTES: (UNLESS OTHERWISE SPECIFIED)

1. MATERIAL:
   - SHELL: THERMOPLASTIC, UL94 V-0.
   - INSERT: THERMOPLASTIC, UL94 V-0.
   - O-RING: NBR/SILICONE RUBBER.
   - BACK SHELL: THERMOPLASTIC, UL94 V-0.
   - CLAMP NUT: THERMOPLASTIC, UL94 V-0.
   - CLAMP RING: THERMOPLASTIC, UL94 V-0.
   - CABLE SEAL: EPDM.
2. SPECIFICATIONS:
   - 2.1 RATED CURRENT:
     - 2.1.1 STAMPED CONTACT 5A (MAX).
     - 2.1.2 MACHINED CONTACT 7.5A (MAX).
   - 2.2 RATED VOLTAGE: 250V(AC/DC).
   - 2.3 OPERATING TEMPERATURE: SEE TABLE .
   - 2.4 DIELECTRIC WITHSTANDING VOLTAGE: LESS THAN 2 MILLIAMPS CURRENT LEAKAGE@1500 VOLTS AC.
   - 2.5 INSULATION RESISTANCE: 5000 MEGOHMS MIN.
   - 2.6 IP--CLASS: IP67 AND IP69K IN THE MATED CONDITION.
   - 2.7 MATING CYCLES DURABILITY: 500 CYCLES MIN.
   - 2.8 RoHS COMPLIANT.
3. SUITABLE CONTACTS : 20# CONTACT.
4. ALL DIMENSIONS ARE FOR REFERENCE USE ONLY.
5. ADD LOCTITE TO RETAIN BACKSHELL DURING UN-MATING AND TO PROVIDE ADDITIONAL PROTECTION AGAINST VIBRATION.

DIMENSION ØA	CABLE OD RANGE
16.5 MM	10.0-16.0 MM
18.5 MM	12.0-18.0 MM

KEY	PART NUMBER	
	-40°C ~ +105°C	-40°C ~ +125°C
N	RTS6BS18N32S	RTS6BS18N32S03

QUANTITY	PART NUMBER	DESCRIPTION	ITEM

MATERIALS LIST

UNLESS OTHERWISE SPECIFIED
1) All dimensions are in metric(mm).
2) Tolerances are as follows:
1 PL DEC ±0.30
2 PL DEC ±0.15
3 PL DEC ±0.08
Fractions ±1/64
Angles ±1°
3) Note reference = X

MATERIAL SPECIFICATIONS:

PROCESS SPECIFICATIONS:

NEXT ASS'Y:

SIGNATURES		DATE
DRAWN:	Blink	Jun-21-2018
CHECKED:	Tod	Jun-21-2018
ENGINEER:		
APPROVAL:	Tommy	Jun-21-2018
CUSTOMER:		

THIS DRAWING IS SUPPLIED FOR INFORMATION ONLY. DESIGN FEATURES, SPECIFICATIONS AND PERFORMANCE DATA SHOWN HEREON ARE THE PROPERTY OF THE AMPHENOL CORPORATION. NO RIGHTS OF REPRODUCTION ARE IMPLIED. ALL DIMENSIONS ARE SUBJECT TO NORMAL MANUFACTURING VARIATIONS.

Amphenol
Sine Systems - www.amphenol-sine.com
44724 Morley Drive
Clinton Township, MI 48036

ECO-MATE,RECPTACLE,BACK SHELL, SIZE 18,32POS,SOCKET.

SIZE	TYPE	DWG NO:	REVISION
B	C-	RTS1BS18*32Sxx	A1

SCALE: NONE SHEET 1 OF 1

TITLE: ECO-MATE,RECPTACLE,BACK SHELL,SIZE 18,32POS,SOCKET.
DWG NO: RTS1BS18*32Sxx
REV: A1
SH: 1
OF: 1