# ex Automotive Family FPGAs

## Specifications

- 3,000 to 12,000 Available System Gates
- Maximum 512 Flip-Flops (Using CC Macros)
- 0.22 µm CMOS Process Technology
- Up to 132 User-Programmable I/O Pins

## Features

- 250 MHz Internal Performance, Low-Power Antifuse FPGA
- Advanced Small-Footprint Packages
- Pin-to-Pin Compatibility with eX Commercial- and Industrial-Grade Devices
- Hot-Swap Compliant I/Os
- Single-Chip Solution
- Nonvolatile
- Live on Power-Up
- No Power-Up/Down Sequence Required for Supply Voltages
- Configurable Weak Resistor Pull-Up or Pull-Down for Tristated Outputs during Power-Up
- Individual Output Slew-Rate Control
- 2.5 V and 3.3 V I/Os
- Software Design Support with Designer and Libero® Integrated Design Environment (IDE) Tools
- Up to 100% Resource Utilization with 100% Pin Locking
- Deterministic Timing
- Unique In-System Diagnostic and Verification Capability with Silicon Explorer II
- Boundary Scan Testing in Compliance with IEEE Standard 1149.1 (JTAG)
- FuseLock™ Secure Programming Technology Designed to Prevent Reverse Engineering and Design Theft

## Product Profile

| **Device** | **eX64** | **eX128** | **eX256** |
|---|---|---|---|
| Capacity<br>System Gates<br>Typical Gates | <br>3,000<br>2,000 | <br>6,000<br>4,000 | <br>12,000<br>8,000 |
| **Register Cells**<br>Dedicated Flip-Flops<br>Maximum Flip-Flops | <br>64<br>128 | <br>128<br>256 | <br>256<br>512 |
| Combinatorial Cells | 128 | 256 | 512 |
| Maximum User I/Os | 84 | 100 | 132 |
| **Global Clocks**<br>Hardwired<br>Routed | <br>1<br>2 | <br>1<br>2 | <br>1<br>2 |
| Speed Grades* | Std. | Std. | Std. |
| Temperature Grades* | A | A | A |
| **Package** (by pin count)<br>TQ<br>CS | <br>64, 100<br>49, 128 | <br>64, 100<br>49, 128 | <br>100<br>128, 180 |

*Note: * The eX family is also offered in commercial and industrial temperature grades with –F, –P, and Std. speed grades. Refer to the eX Family FPGAs datasheet for more details.*


© 2012 Microsemi Corporation

# Ordering Information

eX128 — TQ G 100 A

Application (Ambient Temperature Range)
A = Automotive (-40°C to 125°C)
Blank = Commercial (0°C to 70°C)
I = Industrial (-40°C to 85°C)

Package Lead Count

Lead-Free Packaging
Blank = Standard Packaging
G = RoHS Compliant Packaging

Package Type
TQ = Thin Quad Flat Pack (1.4mm pitch)
CS = Chip-Scale Package (0.8mm pitch)

Speed Grade
Blank= Standard Speed
P= Approximately 30% Faster than Standard
F= Approximately 40% Slower than Standard

Part Number
eX64 = 64 Dedicated Flip-Flops (3,000 System Gates)
eX128 = 128 Dedicated Flip-Flops (6,000 System Gates)
eX256 = 256 Dedicated Flip-Flops (12,000 System Gates)

*Note: Automotive grade parts (A grade) devices are tested at room temperature to specifications that have been guard banded based on characterization across the recommended operating conditions. A-grade parts are not tested at extended temperatures. If testing to ensure guaranteed operation at extended temperatures is required, please contact your local Microsemi SoC Products Group Sales office to discuss testing options available.*

# Plastic Device Resources

| Device | User I/Os (Including Clock Buffers) | | | | |
|---|---|---|---|---|---|
| | **TQ 64** | **TQ100** | **CS49** | **CS128** | **CS180** |
| eX64 | 41 | 56 | 36 | 84 | – |
| eX128 | 46 | 70 | 36 | 100 | – |
| eX256 | – | 81 | – | 100 | 132 |

*Note: **Package Definitions:** TQ = Thin Quad Flat Pack, CS = Chip Scale Package*

# Speed Grade and Temperature Grade Matrix

| | Std. |
|---|---|
| A | ✓ |

*Note: Refer to the eX Family FPGAs datasheet for more details on commercial- and industrial-grade offerings.*

Contact your local Microsemi SoC Products Group representative for device availability.

# Table of Contents

## ex Automotive Family FPGAs

## ex Automotive Family FPGAs

General Description . . . . . 1-1
eX Family Architecture . . . . . 1-1
Other Architectural Features . . . . . 1-5
Design Considerations . . . . . 1-12
Related Documents . . . . . 1-14
Operating Conditions . . . . . 1-15
2.5 V LVCMOS2 Electrical Specifications . . . . . 1-16
3.3 V LVTTL Electrical Specifications . . . . . 1-16
Power Dissipation . . . . . 1-17
CEQ Values for eX Devices . . . . . 1-18
Junction Temperature . . . . . 1-19
Package Thermal Characteristics . . . . . 1-19
eX Timing Model . . . . . 1-20
Timing Characteristics . . . . . 1-24
Temperature and Voltage Derating Factors . . . . . 1-24
eX Family Timing Characteristics . . . . . 1-25
Pin Descriptions . . . . . 1-28

## Package Pin Assignments

TQ64 . . . . . 2-1
TQ100 . . . . . 2-3
CS49 . . . . . 2-6
CS128 . . . . . 2-8
CS180 . . . . . 2-11

## Datasheet Information

List of Changes . . . . . 3-1
Datasheet Categories . . . . . 3-2
Export Administration Regulations (EAR) . . . . . 3-2

# 1 – ex Automotive Family FPGAs

## General Description

Based on a 0.22 µm CMOS process technology, the eX family of FPGAs is a low-cost solution for low-power, high-performance designs. With the automotive temperature grade support (–40ºC to 125ºC), the eX devices can address many in-cabin telematics and automobile interconnect applications. The low-power attributes inherent in antifuse technology make the eX devices ideal for designers who are looking to integrate low-density, power-sensitive automotive applications into a programmable logic solution, enabling quick time-to-market.

## eX Family Architecture

The eX family is implemented on a high-voltage twin-well CMOS process using 0.22 µm design rules. The eX family architecture uses a “sea-of-modules” structure where the entire floor of the device is covered with a grid of logic modules with virtually no chip area lost to interconnect elements or routing. Interconnection among these logic modules is achieved using Microsemi’s patented metal-to-metal programmable antifuse interconnect elements. The antifuse interconnect is made up of a combination of amorphous silicon and dielectric material with barrier metals and has an "on" state resistance of 25 Ω with a capacitance of 1.0 fF for low-signal impedance. The antifuses are normally open circuit and, when programmed, form a permanent low-impedance connection. The eX family provides two types of logic modules, the register cell (R-cell) and the combinatorial cell (C-cell).

The R-cell contains a flip-flop featuring asynchronous clear, asynchronous preset, and clock enable (using the S0 and S1 lines) control signals (Figure 1-1). The R-cell registers feature programmable clock polarity selectable on a register-by-register basis. This provides additional flexibility while allowing mapping of synthesized functions into the eX FPGA. The clock source for the R-cell can be chosen from either the hardwired clock or the routed clock.

The C-cell implements a range of combinatorial functions up to five inputs (Figure 1-2 on page 1-2). Inclusion of the DB input and its associated inverter function enables the implementation of more than 4,000 combinatorial functions in the eX architecture in a single module.

Two C-cells can be combined together to create a flip-flop to imitate an R-cell via the use of the CC macro. This is particularly useful when implementing nontiming-critical paths and when the design engineer is running out of R-cells. For more information about the CC macro, refer to the *Maximizing Logic Utilization in eX, SX and SX-A FPGA Devices Using CC Macros* application note.

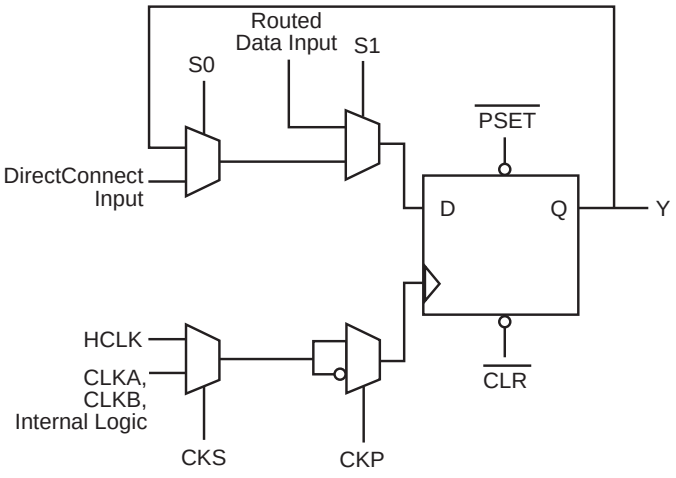


***Figure 1-1 •*** **R-Cell**

## Module Organization

C-cell and R-cell logic modules are arranged into horizontal banks called Clusters, each of which contains two C-cells and one R-cell in a C-R-C configuration.

Clusters are further organized into modules called SuperClusters for improved design efficiency and device performance, as shown in Figure 1-3 on page 1-3. Each SuperCluster is a two-wide grouping of Clusters.

## Routing Resources

Clusters and SuperClusters can be connected through the use of two innovative local routing resources called FastConnect and DirectConnect, which enable extremely fast and predictable interconnection of modules within Clusters and SuperClusters (Figure 1-4 on page 1-3). This routing architecture also dramatically reduces the number of antifuses required to complete a circuit, ensuring the highest possible performance.

DirectConnect is a horizontal routing resource that provides connections from a C-cell to its neighboring R-cell in a given SuperCluster. DirectConnect uses a hardwired signal path requiring no programmable interconnection to achieve its fast signal propagation time of less than 0.1 ns.

FastConnect enables horizontal routing between any two logic modules within a given SuperCluster and vertical routing with the SuperCluster immediately below it. Only one programmable connection is used in a FastConnect path, delivering maximum pin-to-pin propagation of 0.6 ns.

In addition to DirectConnect and FastConnect, the architecture makes use of two globally oriented routing resources, known as segmented routing and high-drive routing. Microsemi's segmented routing structure provides a variety of track lengths for extremely fast routing between SuperClusters. The exact combination of track lengths and antifuses within each path is chosen by the fully automatic place-and-route software to minimize signal propagation delays.

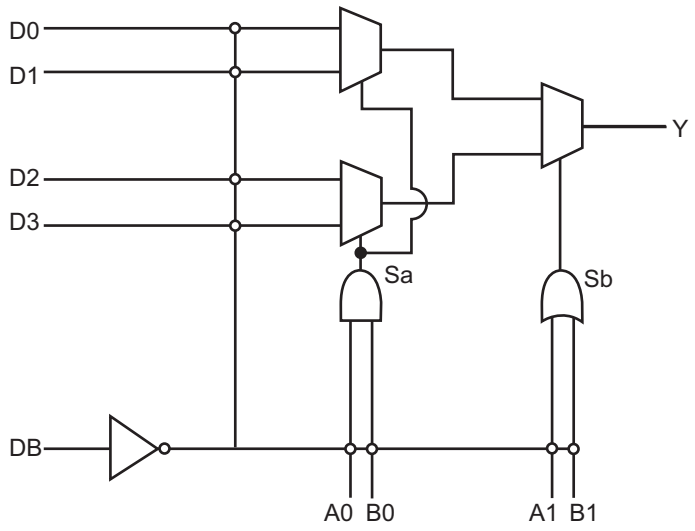


***Figure 1-2 •*** **C-Cell**

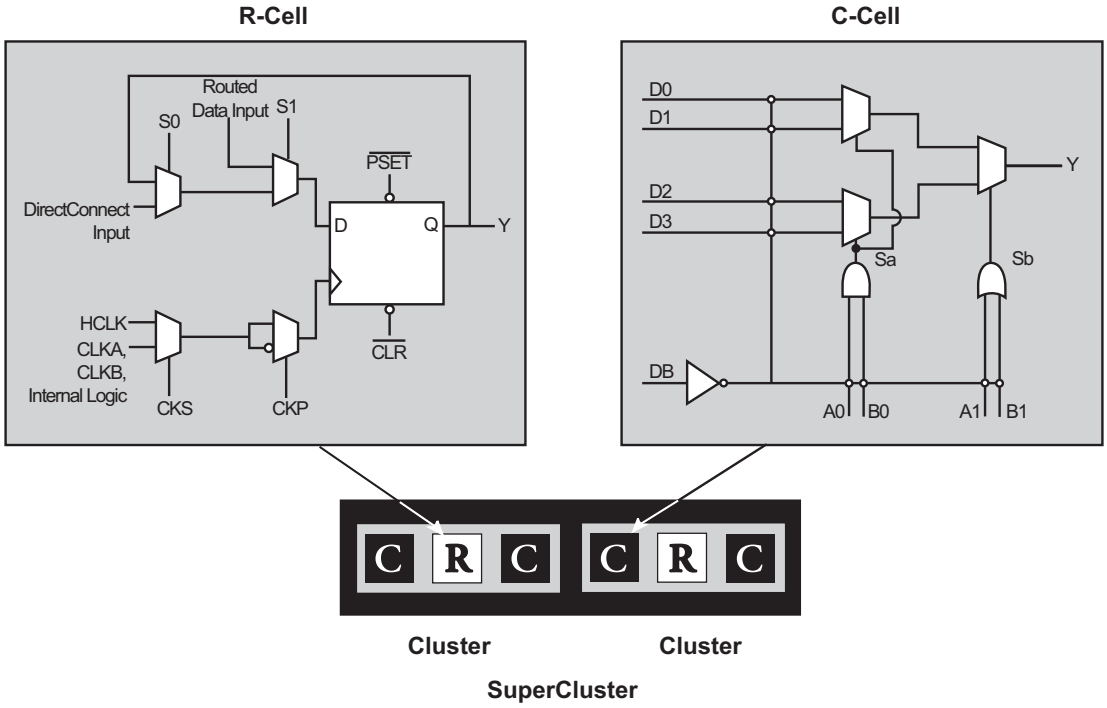


*Figure 1-3 •* **Cluster Organization**

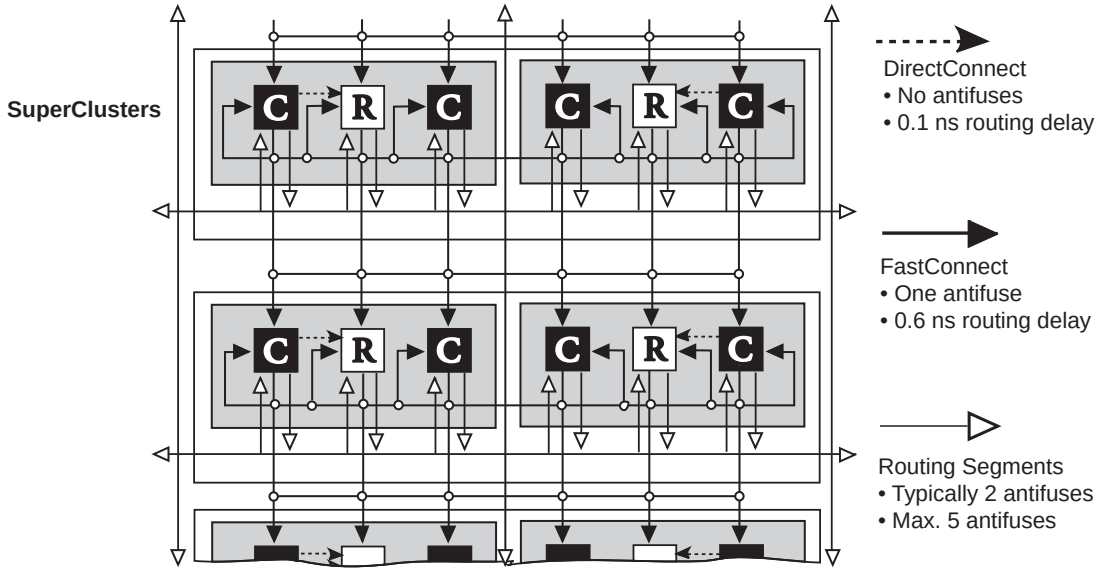


*Figure 1-4 •* **DirectConnect and FastConnect for SuperClusters**

## Clock Resources

eX's high-drive routing structure provides three clock networks. The first clock, called HCLK, is hardwired from the HCLK buffer to the clock select MUX in each R-cell. HCLK cannot be connected to combinational logic. This provides a dedicated propagation path for the clock signal for the automotive-grade eX devices. The hardwired clock is tuned to provide a clock skew of less than 0.1 ns worst case. If not used, the HCLK pin must be tied Low or High and must not be left floating. Figure 1-5 describes the clock circuit used for the constant load HCLK.

HCLK does not function until the fourth clock cycle each time the device is powered up to prevent false output levels due to any possible slow power-on-reset signal and fast start-up clock circuit. To activate HCLK from the first cycle, the TRST pin must be reserved in the Designer software and the pin must be tied to GND on the board. (See the "TRST, I/O Boundary Scan Reset Pin" on page 1-29).

The remaining two clocks (CLKA, CLKB) are global routed clock networks that can be sourced from external pins or from internal logic signals (via the CLKINT routed clock buffer) within the eX device. CLKA and CLKB may be connected to sequential cells or to combinational logic. If CLKA or CLKB is sourced from internal logic signals, the external clock pin cannot be used for any other input and must be tied Low or High and must not float. Figure 1-6 describes the CLKA and CLKB circuit used in eX devices.

Table 1-1 describes the possible connections of the routed clock networks, CLKA and CLKB.

Unused clock pins must not be left floating and must be tied to High or Low.

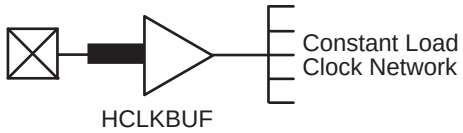


***Figure 1-5 •*** **eX HCLK Clock Pad**

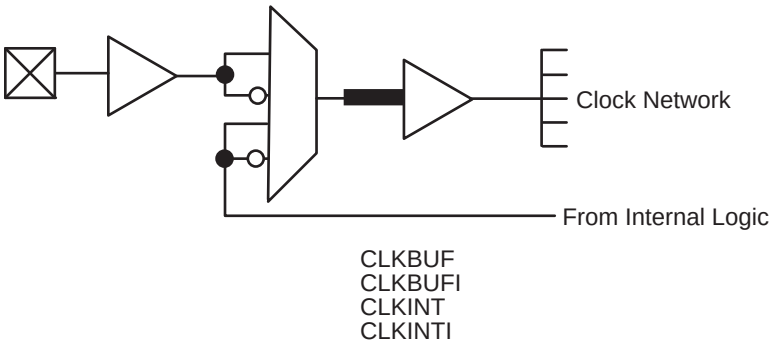


***Figure 1-6 •*** **eX Routed Clock Buffer**

***Table 1-1 •*** **Connections of Routed Clock Networks, CLKA and CLKB**

| Module | Pins |
|---|---|
| C-Cell | A0, A1, B0 and B1 |
| R-Cell | CLKA, CLKB, S0, S1, PSET, and CLR |
| I/O Cell | EN |

# Other Architectural Features

## Performance

The combination of the various architectural features enables automotive-grade eX devices to operate with internal clock frequencies at 250 MHz for fast execution of complex logic functions.

Automotive-grade eX devices are the optimal platforms upon which to integrate in-cabin telematics and automobile interconnect applications previously only contained in ASICs or gate arrays.

eX devices meet the performance goals of gate arrays, and, at the same time, present significant improvements in cost and time to market. Using timing-driven place-and-route tools, designers can achieve highly deterministic device performance.

## User Security

The FuseLock advantage is designed to prevent unauthorized users from being able to read back the contents of a Microsemi antifuse FPGA. In addition to the inherent strengths of the architecture, there is a special Security Fuse inside the eX device that is intended to disable the probing circuitry and prohibit further programming of the device. This Fuse cannot be accessed or bypassed without destroying access to the rest of the device, making Microsemi antifuse FPGAs highly resistant to both invasive and more subtle noninvasive attacks.

Look for this symbol to ensure your valuable IP is protected with industry-standard security.

FuseLock™

***Figure 1-7 •*** **FuseLock**

For more information, refer to the *Implementation of Security in Actel Antifuse FPGAs* application note.

## I/O Modules

Each I/O on an eX device can be configured as an input, an output, a tristate output, or a bidirectional pin. I/O cells in eX devices do not contain embedded latches or flip-flops and can be inferred directly from HDL code. The device can easily interface with any other device in the system, which in turn enables parallel design of system components and reduces overall design time.

All unused I/Os are configured as tristate outputs by Designer software, for maximum flexibility when designing new boards or migrating existing designs. However, it is still recommended to tie all unused I/O pins to GND on the board. Each I/O module has an available pull-up or pull-down resistor of approximately 50 kΩ that can configure the I/O in a known state during power-up. Just shortly before $V_{CCA}$ reaches 2.5 V, the resistors are disabled and the I/Os will be controlled by user logic.

Table 1-2 describes the I/O features of eX devices. For more information on I/Os, refer to the *Microsemi eX, SX-A, and RT54SX-S I/Os* application note.

The automotive eX devices support I/O operation at 2.5 V and 3.3 V.

The detailed description of the I/O pins in eX automotive devices can be found in "Pin Descriptions" on page 1-28.

***Table 1-2 •*** **I/O Features**

| Function | Description |
|---|---|
| Input Buffer Threshold Selection | • 3.3 V LVTTL<br>• 2.5 V LVCMOS2 |
| Nominal Output Drive | • 3.3 V LVTTL<br>• 2.5 V LVCMO 2 |
| Output Buffer | "Hot-Swap" Capability<br>• I/O on an unpowered device does not sink current<br>• Can be used for "cold sparing"<br>• Selectable on an individual I/O basis<br>Individually selectable low-slew option |
| Power-Up | Individually selectable pull-ups and pull-downs during power-up (default is to power-up in tristate)<br>Enables deterministic power-up of device<br>VCCA and VCCI can be powered in any order |

## Hot Swapping

eX I/Os are configured to be hot-swappable. During power-up/down (or partial up/down), all I/Os are tristated, provided VCCA ramps up within a diode drop of VCCI. VCCA and VCCI do not have to be stable during power-up/down, and they do not require a specific power-up or power-down sequence in order to avoid damage to the eX devices. In addition, all outputs can be programmed to have a weak resistor pull-up or pull-down for tristate output at power-up. After the eX device is plugged into an electrically active system, the device will not degrade the reliability of or cause damage to the host system. The device's output pins are driven to a high impedance state until normal chip operating conditions are reached. Please see the application note, *Microsemi SX-A and RT54SX-S Devices in Hot-Swap and Cold-Sparing Applications*, which also applies to eX devices, for more information on hot swapping.

## Power Requirements

Power consumption is extremely low for the automotive-grade eX devices due to the low capacitance of the antifuse interconnects. The antifuse architecture does not require active circuitry to hold a charge (as do SRAM or EPROM), making it the lowest-power FPGA architecture available today.

Figure 1-8 through Figure 1-11 on page 1-8 show some sample power characteristics of eX devices.

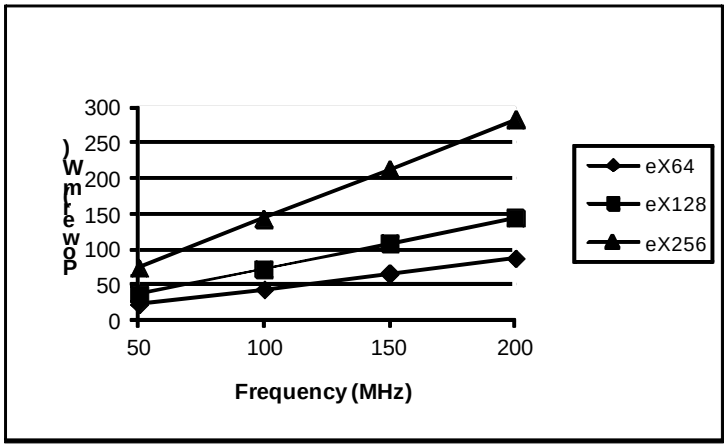


*Notes:*

1. *Device filled with 16-bit counters.*
2. *VCCA, VCCI = 2.7 V, device tested at room temperature.*

***Figure 1-8 •*** **eX Dynamic Power Consumption – High Frequency**

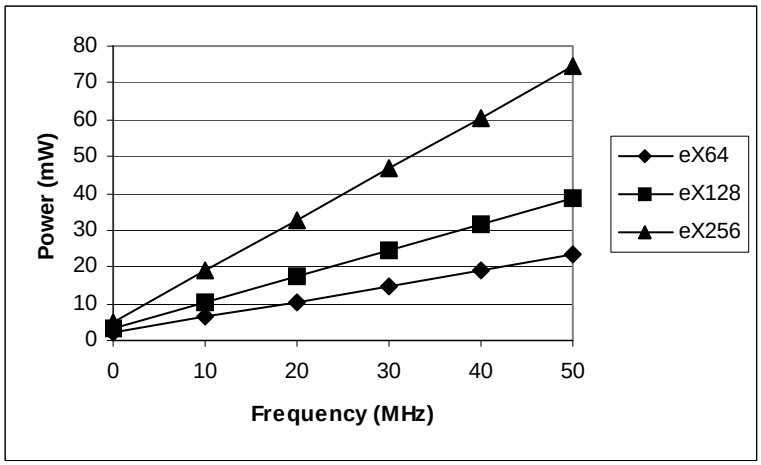


*Notes:*

1. *Device filled with 16-bit counters.*
2. *VCCA, VCCI = 2.7 V, device tested at room temperature.*

***Figure 1-9 •*** **eX Dynamic Power Consumption – Low Frequency**

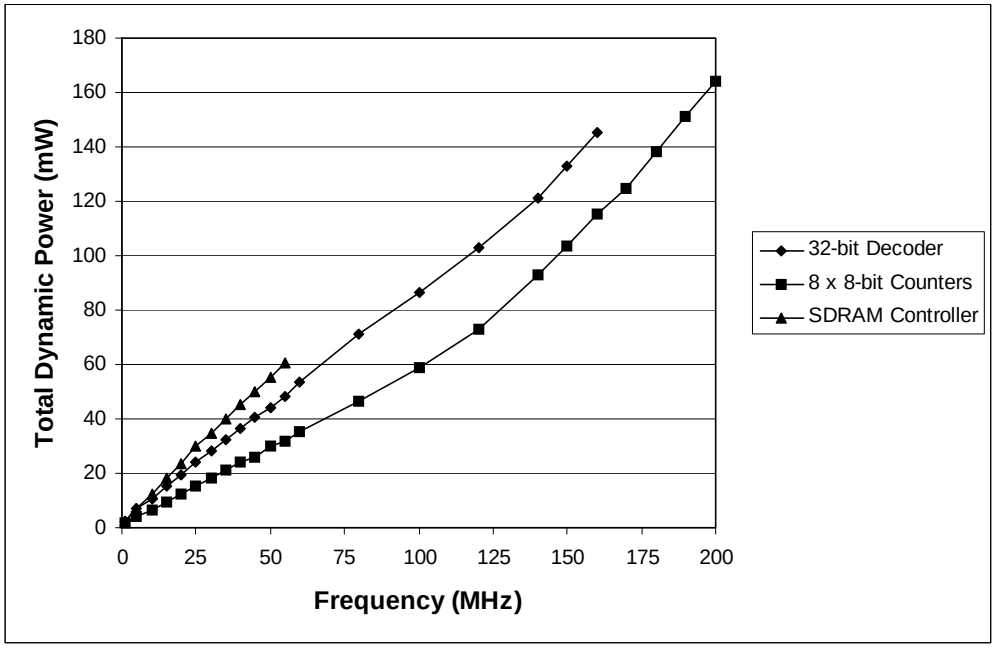


***Figure 1-10*** **• Total Dynamic Power (mW)**

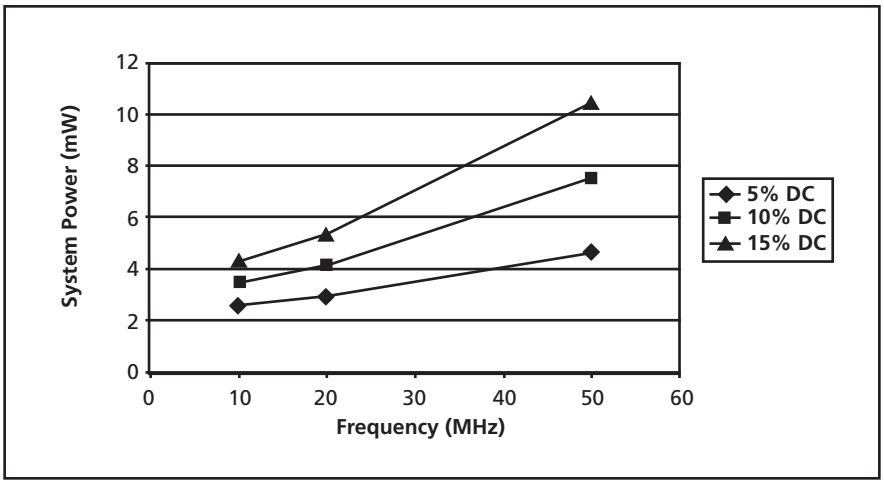


***Figure 1-11*** **• System Power at 5%, 10%, and 15% Duty Cycle**

## Boundary Scan Testing (BST)

All eX devices are IEEE 1149.1 compliant. eX devices offer superior diagnostic and testing capabilities by providing Boundary Scan Testing (BST) and probing capabilities. These functions are controlled through the special test pins (TMS, TDI, TCK, TDO and TRST). The functionality of each pin is defined by two available modes, Dedicated and Flexible, and is described in Table 1-3. In the dedicated test mode, TCK, TDI, and TDO are dedicated pins and cannot be used as regular I/Os. In flexible mode (default mode), TMS should be set High through a pull-up resistor of 10 kΩ. TMS can be pulled Low to initiate the test sequence.

***Table 1-3 •*** **Boundary Scan Pin Functionality**

| Dedicated Test Mode | Flexible Mode |
|---|---|
| TCK, TDI, TDO are dedicated BST pins | TCK, TDI, TDO are flexible and may be used as I/Os |
| No need for pull-up resistor for TMS and TDI | Use a pull-up resistor of 10 kΩ on TMS |

## Dedicated Test Mode

In Dedicated mode, all JTAG pins are reserved for BST; designers cannot use them as regular I/Os. An internal pull-up resistor is automatically enabled on both TMS and TDI pins, and the TMS pin will function as defined in the IEEE 1149.1 (JTAG) specification.

To select Dedicated mode, users need to reserve the JTAG pins in Designer software by checking the "Reserve JTAG" box in "Device Selection Wizard" (Figure 1-12). JTAG pins comply with LVTTL/TTL I/O specification regardless of whether they are used as a user I/O or a JTAG I/O. Refer to the "3.3 V LVTTL Electrical Specifications" on page 1-16 for detailed specifications.

***Figure 1-12 •*** **Device Selection Wizard**

## Flexible Mode

In Flexible mode, TDI, TCK and TDO may be used as either user I/Os or as JTAG input pins. The internal resistors on the TMS and TDI pins are disabled in flexible JTAG mode, and an external 10 kΩ pull-resistor to $V_{CCI}$ is required on the TMS pin.

To select the Flexible mode, users need to uncheck the "Reserve JTAG" box in "Device Selection Wizard" in the Designer software. The functionality of TDI, TCK, and TDO pins is controlled by the BST TAP controller. The TAP controller receives two control inputs; TMS and TCK. Upon power-up, the TAP controller enters the Test-Logic-Reset state. In this state, TDI, TCK, and TDO function as user I/Os. The TDI, TCK, and TDO pins are transformed from user I/Os into BST pins when the TMS pin is Low at the first rising edge of TCK. The TDI, TCK, and TDO pins return to user I/Os when TMS is held High for at least five TCK cycles.

Table 1-4 describes the different configuration requirements of BST pins and their functionality in different modes.

***Table 1-4 •*** **Boundary Scan Pin Configurations and Functions**

| Mode | Designer "Reserve JTAG" Selection | TAP Controller State |
|---|---|---|
| Dedicated (JTAG) | Checked | Any |
| Flexible (User I/O) | Unchecked | Test-Logic-Reset |
| Flexible (JTAG) | Unchecked | Any EXCEPT Test-Logic-Reset |

## TRST Pin

The TRST pin functions as a dedicated Boundary-Scan Reset pin when the "Reserve JTAG Test Reset" option is selected as shown in Figure 1-12. An internal pull-up resistor is permanently enabled on the TRST pin in this mode. It is recommended to connect this pin to GND in normal operation to keep the JTAG state controller in the Test-Logic-Reset state. When JTAG is being used, it can be left floating or be driven High.

When the "Reserve JTAG Test Reset" option is not selected, this pin will function as a regular I/O. If unused as an I/O in the design, it will be configured as a tristated output.

## JTAG Instructions

Table 1-5 lists the supported instructions with the corresponding IR codes for eX devices.

***Table 1-5 •*** **JTAG Instruction Code**

| Instructions (IR4: IR0) | Binary Code |
|---|---|
| EXTEST | 00000 |
| SAMPLE / PRELOAD | 00001 |
| INTEST | 00010 |
| USERCODE | 00011 |
| IDCODE | 00100 |
| HIGHZ | 01110 |
| CLAMP | 01111 |
| Diagnostic | 10000 |
| BYPASS | 11111 |
| Reserved | All others |

Table 1-6 lists the codes returned after executing the IDCODE instruction for eX devices. Note that bit 0 is always "1." Bits 11-1 are always "02F," which is Microsemi's manufacturer code.

***Table 1-6 •*** **IDCODE for eX Devices**

| Device | Revision | Bits 31-28 | Bits 27-12 |
|---|---|---|---|
| eX64 | 0 | 8 | 40B2, 42B2 |
| eX128 | 0 | 9 | 40B0, 42B0 |
| eX256 | 0 | 9 | 40B5, 42B5 |
| eX64 | 1 | A | 40B2, 42B2 |
| eX128 | 1 | B | 40B0, 42B0 |
| eX256 | 1 | B | 40B5, 42B5 |

## Programming

Device programming is supported through Silicon Sculptor series of programmers. In particular, Silicon Sculptor II is a compact, robust, single-site and multi-site device programmer for the PC.

With standalone software, Silicon Sculptor II allows concurrent programming of multiple units from the same PC, ensuring the fastest programming times possible. Each fuse is subsequently verified by Silicon Sculptor II to insure correct programming. In addition, integrity tests ensure that no extra fuses are programmed. Silicon Sculptor II also provides extensive hardware self-testing capability.

The procedure for programming an eX device using Silicon Sculptor II is as follows:

1. Load the *.AFM file
2. Select the device to be programmed
3. Begin programming

When the design is ready to go to production, Microsemi offers device volume-programming services either through distribution partners or via in-house programming from the factory.

For more details on programming eX Automotive devices, please refer to the *Programming Antifuse Devices* and the *Silicon Sculptor II User's Guides*.

## Probing Capabilities

Automotive-grade eX devices provide internal probing capability that is accessed with the JTAG pins. The Silicon Explorer II Diagnostic hardware is used to control the TDI, TCK, TMS, and TDO pins to select the desired nets for debugging. The user assigns the selected internal nets in the Silicon Explorer II software to the PRA/PRB output pins for observation. Probing functionality is activated when the BST pins are in JTAG mode and the TRST pin is driven High or left floating. If the TRST pin is held Low, the TAP controller will remain in the Test-Logic-Reset state, so no probing can be performed. The Silicon Explorer II automatically places the device into JTAG mode, but the user must drive the TRST pin High or allow the internal pull-up resistor to pull TRST High.

When you select the "Reserve Probe" box, as shown in Figure 1-12 on page 1-9, the Designer software reserves the PRA and PRB pins as dedicated outputs for probing. This "reserve" option is merely a guideline. If the Designer software requires that the PRA and PRB pins be user I/Os to achieve successful layout, the tool will use these pins for user I/Os. If you assign user I/Os to the PRA and PRB pins and select the "Reserve Probe" option, Designer Layout will override the option and place user I/Os on those pins.

To allow for probing capabilities, the security fuse must not be programmed. Programming the security fuse will disable the probe circuitry. Table 1-7 on page 1-12 summarizes the possible device configurations for probing once the device leaves the "Test-Logic-Reset" JTAG state.

## Silicon Explorer II Probe

Silicon Explorer II is an integrated hardware and software solution that, in conjunction with Designer software tools, allows users to examine any of the internal nets of the device while it is operating in a prototype or a production system. The user can probe into an eX device via the PRA and PRB pins without changing the placement and routing of the design and without using any additional resources. Silicon Explorer II's noninvasive method does not alter timing or loading effects, thus shortening the debug cycle.

Silicon Explorer II does not require relayout or additional MUXes to bring signals out to an external pin, which is necessary when using programmable logic devices from other suppliers.

Silicon Explorer II samples data at 100 MHz (asynchronous) or 66 MHz (synchronous). Silicon Explorer II attaches to a PC's standard COM port, turning the PC into a fully functional 18-channel logic analyzer. Silicon Explorer II allows designers to complete the design verification process at their desks and reduces verification time from several hours per cycle to a few seconds.

The Silicon Explorer II tool uses the boundary scan ports (TDI, TCK, TMS and TDO) to select the desired nets for verification. The selected internal nets are assigned to the PRA/PRB pins for observation. Figure 1-13 illustrates the interconnection between Silicon Explorer II and the automotive-grade eX device to perform in-circuit verification.

# Design Considerations

The TDI, TCK, TDO, PRA, and PRB pins should not be used as input or bidirectional ports. Since these pins are active during probing, critical signals input through these pins are not available while probing. In addition, the Security Fuse should not be programmed because doing so disables the probe circuitry. It is recommended to use a 70Ω series termination resistor on every probe connector (TDI, TCK, TMS, TDO, PRA, PRB). The 70 Ω series termination is used to prevent data transmission corruption during probing and reading back the checksum.

***Table 1-7 •*** **Device Configuration Options for Probe Capability (TRST pin reserved)**

| JTAG Mode | TRST[1] | Security Fuse Programmed | PRA, PRB[2] | TDI, TCK, TDO[2] |
|---|---|---|---|---|
| Dedicated | Low | No | User I/O[3] | Probing Unavailable |
| Flexible | Low | No | User I/O[3] | User I/O[3] |
| Dedicated | High | No | Probe Circuit Outputs | Probe Circuit Inputs |
| Flexible | High | No | Probe Circuit Outputs | Probe Circuit Inputs |
| – | – | Yes | Probe Circuit Secured | Probe Circuit Secured |

*Notes:*

1. *If TRST pin is not reserved, the device behaves according to TRST = High in the table.*
2. *Avoid using the TDI, TCK, TDO, PRA, and PRB pins as input or bidirectional ports. Since these pins are active during probing, input signals will not pass through these pins and may cause contention.*
3. *If no user signal is assigned to these pins, they will behave as unused I/Os in this mode. Unused pins are automatically tristated by Designer software.*

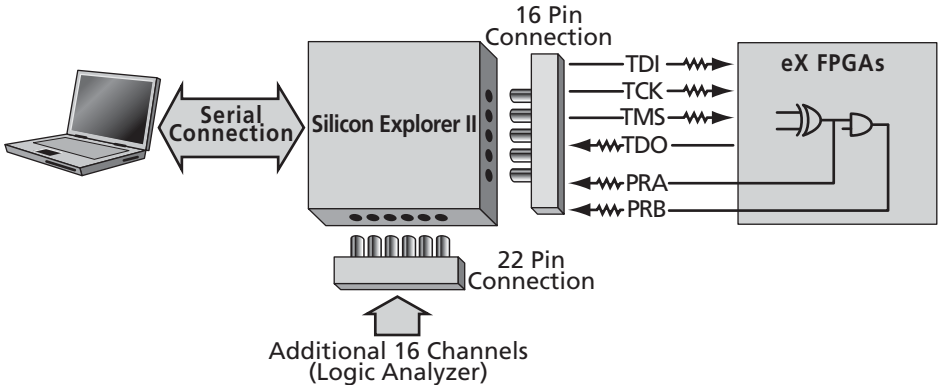


***Figure 1-13*** **• Silicon Explorer II Probe Setup**

## Development Tool Support

The automotive-grade eX family of FPGAs is fully supported by both the Libero® Integrated Design Environment (IDE) and Designer FPGA Development software. Libero IDE is a design management environment, seamlessly integrating design tools while guiding the user through the design flow, managing all design and log files, and passing necessary design data among tools. Libero IDE allows users to integrate both schematic and HDL synthesis into a single flow and verify the entire design in a single environment. Libero IDE includes Synplify® for Actel from Synplicity®, ViewDraw® for Actel from Mentor Graphics®, Model*Sim*® HDL Simulator from Mentor Graphics, WaveFormer Lite™ from SynaptiCAD®, and Designer software from Microsemi. Refer to the *Libero IDE flow* (located on the Microsemi SoC Products Group website) diagram for more information.

Designer software is a place-and-route tool and provides a comprehensive suite of backend support tools for FPGA development. The Designer software includes timing-driven place-and-route, and a world-class integrated static timing analyzer and constraints editor. With the Designer software, a user can select and lock package pins while only minimally impacting the results of place-and-route. Additionally, the back-annotation flow is compatible with all the major simulators and the simulation results can be cross-probed with Silicon Explorer II, Microsemi's integrated verification and logic analysis tool. Another tool included in the Designer software is the SmartGen core builder, which easily creates popular and commonly used logic functions for implementation into your schematic or HDL design. Designer software is compatible with the most popular FPGA design entry and verification tools from companies such as Mentor Graphics, Synplicity, Synopsys®, and Cadence Design Systems. The Designer software is available for both the Windows and UNIX operating systems.

# Related Documents

## Datasheet

*eX Family FPGAs*

www.microsemi.com/soc/documents/eX_DS.pdf

## Application Notes

*Maximizing Logic Utilization in eX, SX and SX-A FPGA Devices Using CC Macros*

www.microsemi.com/soc/documents/CC_Macro_AN.pdf

*Implementation of Security in Actel Antifuse FPGAs*

www.microsemi.com/soc/documents/Antifuse_Security_AN.pdf

*Microsemi eX, SX-A, and RT54SX-S I/Os*

www.microsemi.com/soc/documents/antifuseIO_AN.pdf

*Microsemi SX-A and RT54SX-S Devices in Hot-Swap and Cold-Sparing Applications*

www.microsemi.com/soc/documents/HotSwapColdSparing_AN.pdf

*Design for Low Power in Actel Antifuse FPGAs*

www.microsemi.com/soc/documents/Low_Power_AN.pdf

*Programming Antifuse Devices*

www.microsemi.com/soc/documents/AntifuseProgram_AN.pdf

## User Guides

*Silicon Sculptor II User's Guide*

www.microsemi.com/soc/techdocs/manuals/default.asp#programmers

## Miscellaneous

Libero IDE flow

www.microsemi.com/soc/products/tools/libero/flow.html

# Operating Conditions

***Table 1-8 •*** **Absolute Maximum Ratings***

| Symbol | Parameter | Limits | Units |
|---|---|---|---|
| VCCI | DC Supply Voltage for I/Os | –0.3 to +4.0 | V |
| VCCA | DC Supply Voltage for Array | –0.3 to +3.0 | V |
| VI | Input Voltage | –0.5 to $V_{CCI}$ + 0.5 | V |
| VO | Output Voltage | –0.5 to +$V_{CCI}$ | V |
| $T_{STG}$ | Storage Temperature | –65 to +150 | °C |
| $T_j$ | Maximum Junction Temperature | –65 to +150 | °C |

*Note: *Stresses beyond those listed under "Absolute Maximum Ratings" may cause permanent damage to the device. Exposure to temperatures between absolute maximum and recommended operating conditions for extended periods may affect device reliability. Devices should not be operated outside the Recommended Operating Conditions.*

***Table 1-9 •*** **Recommended Operating Conditions**

| Parameter | Automotive | Units |
|---|---|---|
| Temperature Range ($T_j$) | –40 to +125 | °C |
| 2.5 V Power Supply Range (VCCA, VCCI) | 2.3 to 2.7 | V |
| 3.3 V Power Supply Range (VCCI) | 3.0 to 3.6 | V |

*Note: Automotive grade parts (A grade) devices are tested at room temperature to specifications that have been guard banded based on characterization across the recommended operating conditions. A-grade parts are not tested at extended temperatures. If testing to ensure guaranteed operation at extended temperatures is required, contact your local Microsemi SoC Products Group Sales office to discuss testing options available.*

***Table 1-10 •*** **Typical Automotive-Grade eX Standby Current at 25°C**

| Product | VCCA= 2.5 V<br>VCCI = 2.5 V | VCCA = 2.5 V<br>VCCI = 3.3 V |
|---|---|---|
| eX64 | 397 µA | 497 µA |
| eX128 | 696 µA | 795 µA |
| eX256 | 698 µA | 796 µA |

## 2.5 V LVCMOS2 Electrical Specifications

| Symbol | Parameter | | Automotive Min. | Automotive Max. | Units |
|---|---|---|---|---|---|
| VOH | VCCI = MIN, VI = VIH or VIL | (IOH = –1 mA) | 2.0 | | V |
| VOL | VCCI = MIN, VI = VIH or VIL | (IOL= 1 mA) | | 0.4 | V |
| VIL | Input Low Voltage, VOUT ≤ VOL(max) | | | 0.7 | V |
| VIH | Input High Voltage, VOUT ≥ VOH(min) | | 1.7 | | V |
| IIL / IIH | Input Leakage Current, VIN = VCCI or GND | | –20 | 20 | µA |
| IOZ | Tristate Output Leakage Current, VOUT = Tristate | | –20 | 20 | µA |
| $t_R$, $t_{F1,}$[2] | Input Transition Time $t_R$, $t_F$ | | | 10 | ns |
| CIN | Input Capacitance | | | 10 | pF |
| ICC3 | Standby Current | | | 25 | mA |
| IV Curve | Can be derived from the IBIS model at www.microsemi.com/soc/download/ibis/default.aspx. | | | | |

*Notes:*

1. *$t_R$ is the transition time from 0.7 V to 1.7 V.*
2. *$t_F$ is the transition time from 1.7 V to 0.7 V.*
3. *ICC = ICCI + ICCA*

## 3.3 V LVTTL Electrical Specifications

| Symbol | Parameter | | Automotive Min. | Automotive Max. | Units |
|---|---|---|---|---|---|
| VOH | VCCI = MIN, VI = VIH or VIL | (IOH = –3.5 mA) | 2.4 | | V |
| VOL | VCCI = MIN, VI = VIH or VIL | (IOL= 3.5 mA) | | 0.4 | V |
| VIL | Input Low Voltage, VOUT ≤ VOL(max) | | | 0.8 | V |
| VIH | Input High Voltage, VOUT ≥ VOH(min) | | 2.0 | | V |
| IIL / IIH | Input Leakage Current, VIN = VCCI or GND | | –20 | 20 | µA |
| IOZ | Tristate Output Leakage Current, VOUT = Tristate | | –20 | 20 | µA |
| $t_R$, $t_{F1,2}$ | Input Transition Time $t_R$, $t_F$ | | | 10 | ns |
| CIN | Input Capacitance | | | 10 | pF |
| ICC3 | Standby Current | | | 35 | mA |
| IV Curve | Can be derived from the IBIS model at www.microsemi.com/soc/download/ibis/default.aspx. | | | | |

*Notes:*

1. *$t_R$ is the transition time from 0.8 V to 2.0 V.*
2. *$t_F$ is the transition time from 2.0 V to 0.8 V.*
3. *ICC = ICCI + ICCA*
4. *JTAG pins comply with LVTTL/TTL I/O specification regardless of whether they are used as a user I/O or a JTAG I/O.*

### 5 V Tolerance of 3.3 V LVTTL I/Os Using a Tristate Buffer

Input: 3.3 V LVTTL I/Os are 5-V-input tolerant only if the non-PCI mode is used (no clamp diode).

Output: To configure an eX device to drive 5 V with VCCI = 3.3 V, users can utilize an Open Drain configuration of the I/O cell with an array inverter cell and an external pull-up resistor to 5 V. The recommended configuration is illustrated in Figure 1-14. The I/O configuration must be set to LVTTL to disable the PCI clamp diode. For the recommended resistor value in a specific application, please contact Microsemi SoC Products Group Technical Support. For more details, refer to the Design Tips section of the *Microsemi eX, SX-A and RT54SX-S I/Os* application note.

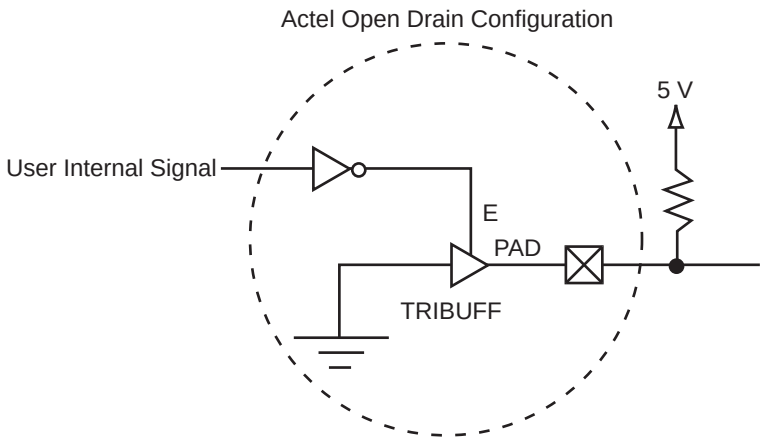


***Figure 1-14* • Open-Drain Configuration for eX**

## Power Dissipation

Power consumption for eX devices can be divided into two components: static and dynamic.

### Static Power Component

The power due to standby current is typically a small component of the overall power. Typical standby current for eX devices is listed in Table 1-10 on page 1-15. For example, the typical static power for eX128 at 3.3 V VCCI is:

ICC * VCCA = 795 µA x 2.5 V = 1.99 mW

*EQ 1*

### Dynamic Power Component

Power dissipation in CMOS devices is usually dominated by the dynamic power dissipation. This component is frequency-dependent and a function of the logic and the external I/O. Dynamic power dissipation results from charging internal chip capacitance. An additional component of the dynamic power dissipation is the totem pole current in the CMOS transistor pairs. The net effect can be associated with an equivalent capacitance that can be combined with frequency and voltage to represent dynamic power dissipation.

Dynamic power dissipation = CEQ * $VCCA^2$ x F

*EQ 2*

where:

CEQ = Equivalent capacitance

F = switching frequency

Equivalent capacitance is calculated by measuring ICCA at a specified frequency and voltage for each circuit component of interest. Measurements have been made over a range of frequencies at a fixed value of VCCA. Equivalent capacitance is frequency-independent, so the results can be used over a wide range of operating conditions. Equivalent capacitance values are shown below.

# CEQ Values for eX Devices

| | |
|---|---|
| Combinatorial modules (Ceqcm) | 1.70 pF |
| Sequential modules (Ceqsm) | 1.70 pF |
| Input buffers (Ceqi) | 1.30 pF |
| Output buffers (Ceqo) | 7.40 pF |
| Routed array clocks (Ceqcr) | 1.05 pF |

The variable and fixed capacitance of other device components must also be taken into account when estimating the dynamic power dissipation.

Table 1-11 shows the capacitance of the clock components of eX devices.

***Table 1-11* • Capacitance of Clock Components of eX Devices**

| | eX64 | eX128 | eX256 |
|---|---|---|---|
| Dedicated array clock – variable (Ceqhv) | 0.85 pF | 0.85 pF | 0.85 pF |
| Dedicated array clock – fixed (Ceqhf) | 18.00 pF | 20.00 pF | 25.00 pF |
| Routed array clock A (r1) | 23.00 pF | 28.00 pF | 35.00 pF |
| Routed array clock B (r2) | 23.00 pF | 28.00 pF | 35.00 pF |

The estimation of the dynamic power dissipation is a piece-wise linear summation of the power dissipation of each component.

Dynamic power dissipation

$$= VCCA^2 * [(m_c * C_{eqcm} * fm_C)_{Comb\ Modules} + (m_s * C_{eqsm} * fm_S)_{Seq\ Modules} + (n * C_{eqi} * fn)_{Input\ Buffers} + (0.5 * (q1 * C_{eqcr} * fq1) + (r1 * fq1))_{RCLKA} + (0.5 * (q2 * C_{eqcr} * fq2) + (r2 * fq2))_{RCLKB} + (0.5 * (s1 * C_{eqhv} * fs1)+(C_{eqhf} * fs1))_{HCLK}] + VCCI^2 * [(p * (C_{eqo} + C_L) * fp)_{Output\ Buffers}]$$

where:

$m_c$ = Number of combinatorial cells switching at frequency fm, typically 20% of C-cells
$m_s$ = Number of sequential cells switching at frequency fm, typically 20% of R-cells
n = Number of input buffers switching at frequency fn, typically number of inputs / 4
p = Number of output buffers switching at frequency fp, typically number of outputs / 4
q1 = Number of R-cells driven by routed array clock A
q2 = Number of R-cells driven by routed array clock B
r1 = Fixed capacitance due to routed array clock A
r2 = Fixed capacitance due to routed array clock B
s1 = Number of R-cells driven by dedicated array clock
$C_{eqcm}$ = Equivalent capacitance of combinatorial modules
$C_{eqsm}$ = Equivalent capacitance of sequential modules
$C_{eqi}$ = Equivalent capacitance of input buffers
$C_{eqcr}$ = Equivalent capacitance of routed array clocks
$C_{eqhv}$ = Variable capacitance of dedicated array clock
$C_{eqhf}$ = Fixed capacitance of dedicated array clock
$C_{eqo}$ = Equivalent capacitance of output buffers
$C_L$ = Average output loading capacitance, typically 10pF
$fm_c$ = Average C-cell switching frequency, typically F/10
$fm_s$ = Average R-cell switching frequency, typically F/10
fn = Average input buffer switching frequency, typically F/5
fp = Average output buffer switching frequency, typically F/5
fq1 = Frequency of routed clock A
fq2 = Frequency of routed clock B
fs1 = Frequency of dedicated array clock

The eX, SX-A and RTSX-S Power Calculator can be used to estimate the total power dissipation (static and dynamic) of eX devices and can be found at www.microsemi.com/soc/techdocs/calculators.aspx.

# Junction Temperature

The temperature variable in the Designer software refers to the junction temperature, not the ambient temperature. This is an important distinction because the heat generated from dynamic power consumption is usually hotter than the ambient temperature. EQ , shown below, can be used to calculate junction temperature. Please refer to Table 1-9 on page 1-15 for the recommended operating conditions.

Junction Temperature = $\Delta T + T_a(1)$

*EQ 3*

Where:

$T_a$ = Ambient Temperature

$\Delta T$ = Temperature gradient between junction (silicon) and ambient = $\theta_{ja}$ * P

P = Power

$\theta_{ja}$ = Junction to ambient of package. $\theta_{ja}$ numbers are located in the "Package Thermal Characteristics" on page 1-19.

# Package Thermal Characteristics

The device junction-to-case thermal characteristic is $\theta_{jc}$, and the junction-to-ambient air characteristic is $\theta_{ja}$. The thermal characteristics for $\theta_{ja}$ are shown with two different air flow rates. $\theta_{jc}$ is provided for reference.

The maximum junction temperature is 150°C.

The maximum power dissipation allowed for eX devices is a function of $\theta_{ja}$. A sample calculation of the absolute maximum power dissipation allowed for a TQFP 100-pin package at automotive temperature and still air is as follows:

$$\text{Maximum Power Allowed} = \frac{\text{Max. junction temp. (°C)} - \text{Max. ambient temp. (°C)}}{\theta_{ja}(\text{°C/W})} = \frac{150\text{°C} - 125\text{°}C}{33.5\text{°C/W}} = 0.746\text{ W}$$

***Table 1-12* • Package Thermal Characteristics**

| Package Type | Pin Count | $\theta_{jc}$ | $\theta_{ja}$ | | | Units |
|---|---|---|---|---|---|---|
| | | | Still Air | $\theta_{ja}$ 1.0 m/s | $\theta_{ja}$ 2.5 m/s | |
| Thin Quad Flat Pack | 64 | 12.0 | 42.4 | 36.3 | 34.0 | °C/W |
| Thin Quad Flat Pack | 100 | 14.0 | 33.5 | 27.4 | 25.0 | °C/W |
| Chip-Scale Package | 49 | | 72.2 | 59.5 | 54.1 | °C/W |
| Chip-Scale Package | 128 | | 54.1 | 44.6 | 40.6 | °C/W |
| Chip-Scale Package | 180 | | 57.8 | 47.6 | 43.3 | °C/W |

# eX Timing Model

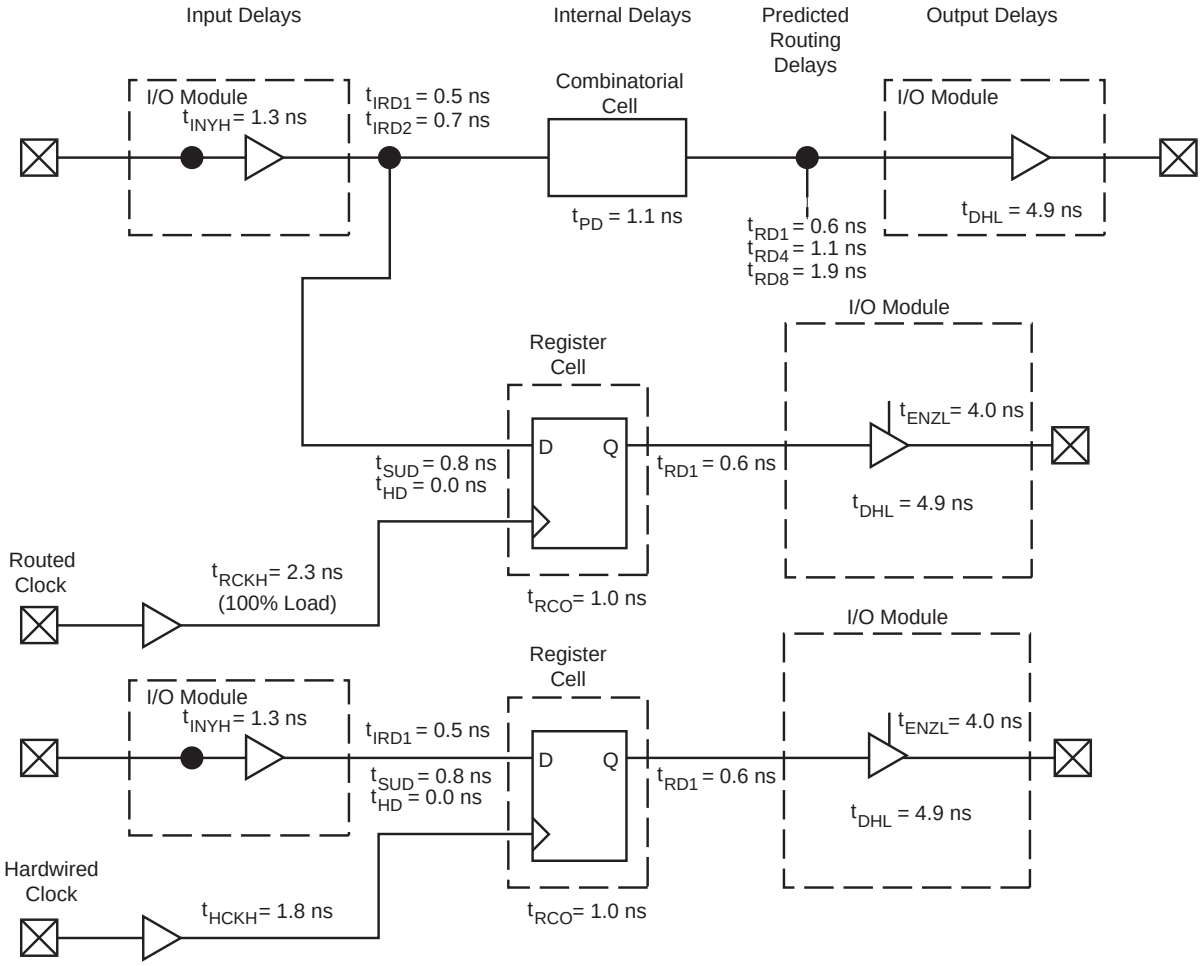


*Note: *Values shown for eX128, worst-case automotive conditions (2.3 V $V_{CCA}$, 3.3 V $V_{CCI}$, 35 pF Pad Load).*

***Figure 1-15 •*** **eX Timing Model**

## Hardwired Clock

External Setup = $t_{INYH} + t_{IRD1} + t_{SUD} – t_{HCKH}$ = 1.3 + 0.5 + 0.8 – 1.8 = 0.8 ns

Clock-to-Out (Pad-to-Pad), typical = $t_{HCKH} + t_{RCO} + t_{RD1} + t_{DHL}$ = 1.8 + 1.0 + 0.6 + 4.9 = 8.3 ns

## Routed Clock

External Setup = $t_{INYH} + t_{IRD2} + t_{SUD} – t_{RCKH}$ = 1.3 + 0.7 + 0.8 – 2.3 = 0.5 ns

Clock-to-Out (Pad-to-Pad), typical = $t_{RCKH} + t_{RCO} + t_{RD1} + t_{DHL}$ = 2.3 + 1.0 + 0.6 + 4.9 = 8.8 ns

## Output Buffer Delays

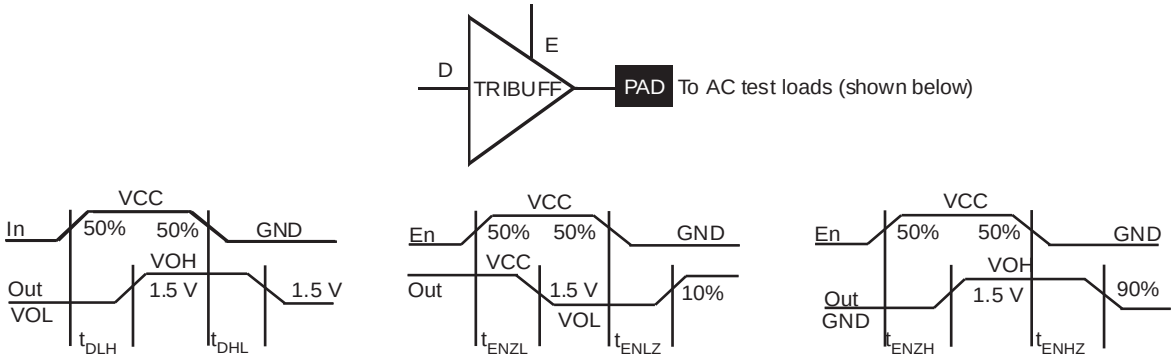


***Table 1-13* • Output Buffer Delays**

## AC Test Loads

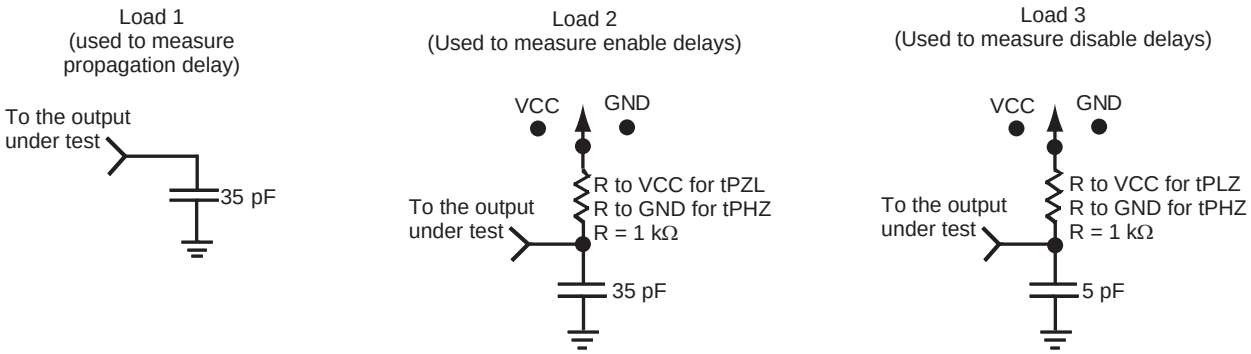


***Figure 1-16* • AC Test Loads**

## Input Buffer Delays

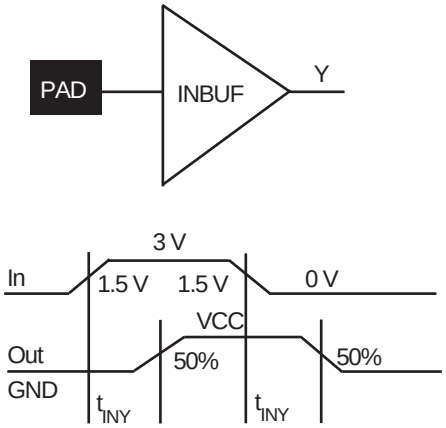


***Table 1-14*** **• Input Buffer Delays**

## C-Cell Delays

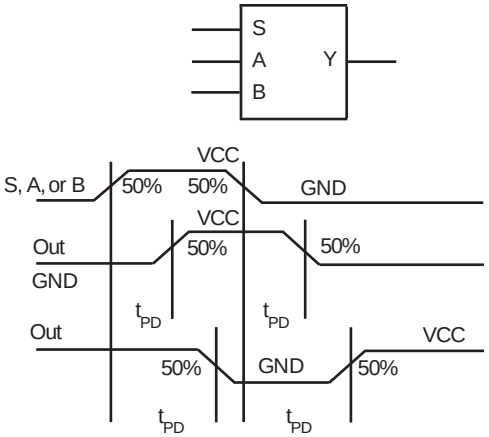


***Table 1-15*** **• C-Cell Delays**

## Cell Timing Characteristics

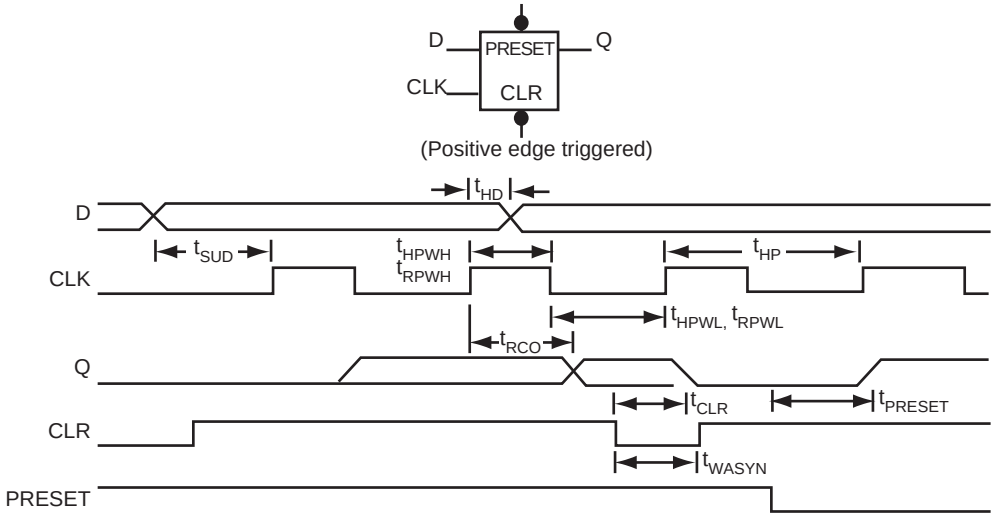


***Figure 1-17*** **• Flip-Flops**

# Timing Characteristics

Timing characteristics for eX devices fall into three categories: family-dependent, device-dependent, and design-dependent. The input and output buffer characteristics are common to all eX family members. Internal routing delays are device-dependent. Design dependency means actual delays are not determined until after placement and routing of the user's design are complete. Delay values may then be determined by using the Timer tool in the Designer software or performing simulation with post-layout delays.

Table 1-17 on page 1-25 lists sample timing characteristics for automotive eX devices.

## Critical Nets and Typical Nets

Propagation delays are expressed only for typical nets, which are used for initial design performance evaluation. Critical net delays can then be applied to the most timing critical paths. Critical nets are determined by net property assignment prior to placement and routing. Up to six percent of the nets in a design may be designated as critical.

## Long Tracks

Some nets in the design use long tracks. Long tracks are special routing resources that span multiple rows, columns, or modules. Long tracks employ three to five antifuse connections. This increases capacitance and resistance, resulting in longer net delays for macros connected to long tracks. Typically, no more than six percent of nets in a fully utilized device require long tracks. Long tracks contribute approximately 4 ns to 8.4 ns delay. This additional delay is represented statistically in higher fanout routing delays.

## Timing Derating

eX devices are manufactured with a CMOS process. Therefore, device performance varies according to temperature, voltage, and process changes. Minimum timing parameters reflect maximum operating voltage, minimum operating temperature, and best-case processing. Maximum timing parameters reflect minimum operating voltage, maximum operating temperature, and worst-case processing.

# Temperature and Voltage Derating Factors

***Table 1-16* • Temperature and Voltage Derating Factors**
**(Normalized to Worst-Case Commercial, $T_J$ = 125°C, VCCA = 2.3 V)**

| | Junction Temperature ($T_J$) | | | | | | |
|---|---|---|---|---|---|---|---|
| **VCCA** | **–55** | **–40** | **0** | **25** | **70** | **85** | **125** |
| 2.3 | 0.70 | 0.70 | 0.77 | 0.78 | 0.88 | 0.91 | 1.00 |
| 2.5 | 0.65 | 0.66 | 0.72 | 0.73 | 0.83 | 0.85 | 0.93 |
| 2.7 | 0.61 | 0.62 | 0.67 | 0.69 | 0.78 | 0.80 | 0.88 |

# eX Family Timing Characteristics

***Table 1-17* • eX Family Timing Characteristics**
**(Worst-Case Automotive Conditions, VCCA = 2.3 V, $T_J$ = 125°C)**

| | | 'Std.' Speed | | |
|---|---|---|---|---|
| **Parameter** | **Description** | **Min.** | **Max.** | **Units** |
| **C-Cell Propagation Delays[1]** | | | | |
| $t_{PD}$ | Internal Array Module | | 1.1 | ns |
| **Predicted Routing Delays[2]** | | | | |
| $t_{DC}$ | FO = 1 Routing Delay, DirectConnect | | 0.1 | ns |
| $t_{FC}$ | FO = 1 Routing Delay, FastConnect | | 0.6 | ns |
| $t_{RD1}$ | FO = Routing Delay | | 0.6 | ns |
| $t_{RD2}$ | FO = 2 Routing Delay | | 0.7 | ns |
| $t_{RD3}$ | FO = 3 Routing Delay | | 0.9 | ns |
| $t_{RD4}$ | FO = 4 Routing Delay | | 1.1 | ns |
| $t_{RD8}$ | FO = 8 Routing Delay | | 1.9 | ns |
| $t_{RD12}$ | FO = 12 Routing Delay | | 2.8 | ns |
| **R-Cell Timing** | | | | |
| $t_{RCO}$ | Sequential Clock-to-Q | | 1.0 | ns |
| $t_{CLR}$ | Asynchronous Clear-to-Q | | 0.9 | ns |
| $t_{PRESET}$ | Asynchronous Preset-to-Q | | 1.0 | ns |
| $t_{SUD}$ | Flip-Flop Data Input Set-Up | 0.8 | | ns |
| $t_{HD}$ | Flip-Flop Data Input Hold | 0.0 | | ns |
| $t_{WASYN}$ | Asynchronous Pulse Width | 2.2 | | ns |
| $t_{RECASYN}$ | Asynchronous Recovery Time | 0.6 | | ns |
| $t_{HASYN}$ | Asynchronous Hold Time | 0.6 | | ns |
| **2.5 V Input Module Propagation Delays** | | | | |
| $t_{INYH}$ | Input Data Pad-to-Y High | | 1.1 | ns |
| $t_{INYL}$ | Input Data Pad-to-Y Low | | 1.4 | ns |
| **3.3 V Input Module Propagation Delays** | | | | |
| $t_{INYH}$ | Input Data Pad-to-Y High | | 1.3 | ns |
| $t_{INYL}$ | Input Data Pad-to-Y Low | | 1.6 | ns |
| **Input Module Predicted Routing Delays[2]** | | | | |
| $t_{IRD1}$ | FO=1 Routing Delay | | 0.5 | ns |
| $t_{IRD2}$ | FO=2 Routing Delay | | 0.7 | ns |
| $t_{IRD3}$ | FO=3 Routing Delay | | 0.9 | ns |

*Notes:*

1. *For dual-module macros, use $t_{PD} + t_{RD1} + t_{PDn}$, $t_{RCO} + t_{RD1} + t_{PDn}$ or $t_{PD1} + t_{RD1} + t_{SUD}$, whichever is appropriate.*
2. *Routing delays are for typical designs across worst-case operating conditions. These parameters should be used for estimating device performance. Post-route timing analysis or simulation is required to determine actual worst-case performance.*
3. *Clock skew improves as the clock network becomes more heavily loaded.*
4. *Delays based on 35 pF loading.*

***Table 1-17* • eX Family Timing Characteristics**
**(Worst-Case Automotive Conditions, VCCA = 2.3 V, $T_J$ = 125°C)**

| | | 'Std.' Speed | | |
|---|---|---|---|---|
| **Parameter** | **Description** | **Min.** | **Max.** | **Units** |
| $t_{IRD4}$ | FO=4 Routing Delay | | 1.1 | ns |
| $t_{IRD8}$ | FO=8 Routing Delay | | 1.9 | ns |
| $t_{IRD12}$ | FO=12 Routing Delay | | 2.8 | ns |
| **Dedicated (Hardwired) Array Clock Networks** | | | | |
| $t_{HCKH}$ | Input Low to High (Pad to R-Cell Input) | | 1.8 | ns |
| $t_{HCKL}$ | Input High to Low (Pad to R-Cell Input) | | 1.8 | ns |
| $t_{HPWH}$ | Minimum Pulse Width High | 2.0 | | ns |
| $t_{HPWL}$ | Minimum Pulse Width Low | 2.0 | | ns |
| $t_{HCKSW}$ | Maximum Skew | | 0.1 | ns |
| $t_{HP}$ | Minimum Period | 4.0 | | ns |
| $f_{HMAX}$ | Maximum Frequency | | 250 | MHz |
| **Routed Array Clock Networks** | | | | |
| $t_{RCKH}$ | Input Low to High (Light Load) (Pad to R-Cell Input) | | 1.6 | ns |
| $t_{RCKL}$ | Input High to Low (Light Load) (Pad to R-Cell Input) | | 1.6 | ns |
| $t_{RCKH}$ | Input Low to High (50% Load) (Pad to R-Cell Input) | | 1.9 | ns |
| $t_{RCKL}$ | Input High to Low (50% Load) (Pad to R-Cell Input) | | 1.9 | ns |
| $t_{RCKH}$ | Input Low to High (100% Load) (Pad to R-Cell Input) | | 2.3 | ns |
| $t_{RCKL}$ | Input High to Low (100% Load) (Pad to R-Cell Input) | | 2.3 | ns |
| $t_{RPWH}$ | Min. Pulse Width High | 2.0 | | ns |
| $t_{RPWL}$ | Min. Pulse Width Low | 2.0 | | ns |
| $t_{RCKSW}$[3] | Maximum Skew (Light Load) | | 0.3 | ns |
| $t_{RCKSW}$[3] | Maximum Skew (50% Load) | | 0.2 | ns |
| $t_{RCKSW}$[3] | Maximum Skew (100% Load) | | 0.1 | ns |
| **2.5 V LVCMOS2 Output Module Timing[4] ($V_{CCI}$ = 2.3 V)** | | | | |
| $t_{DLH}$ | Data-to-Pad Low to High | | 5.9 | ns |
| $t_{DHL}$ | Data-to-Pad High to Low | | 6.3 | ns |

*Notes:*

1. *For dual-module macros, use $t_{PD} + t_{RD1} + t_{PDn}$, $t_{RCO} + t_{RD1} + t_{PDn}$ or $t_{PD1} + t_{RD1} + t_{SUD}$, whichever is appropriate.*
2. *Routing delays are for typical designs across worst-case operating conditions. These parameters should be used for estimating device performance. Post-route timing analysis or simulation is required to determine actual worst-case performance.*
3. *Clock skew improves as the clock network becomes more heavily loaded.*
4. *Delays based on 35 pF loading.*

***Table 1-17*** **• eX Family Timing Characteristics**
**(Worst-Case Automotive Conditions, VCCA = 2.3 V, $T_J$ = 125°C)**

| | | 'Std.' Speed | | |
|---|---|---|---|---|
| **Parameter** | **Description** | **Min.** | **Max.** | **Units** |
| $t_{DHLS}$ | Data-to-Pad High to Low—Low Slew | | 20.8 | ns |
| $t_{ENZL}$ | Enable-to-Pad, Z to L | | 4.5 | ns |
| $t_{ENZLS}$ | Enable-to-Pad Z to L—Low Slew | | 21.2 | ns |
| $t_{ENZH}$ | Enable-to-Pad, Z to H | | 6.1 | ns |
| $t_{ENLZ}$ | Enable-to-Pad, L to Z | | 3.8 | ns |
| $t_{ENHZ}$ | Enable-to-Pad, H to Z | | 7.1 | ns |
| $d_{TLH}$ | Delta Delay vs. Load Low to High | | 0.058 | ns/pF |
| $d_{THL}$ | Delta Delay vs. Load High to Low | | 0.028 | ns/pF |
| $d_{THLS}$ | Delta Delay vs. Load High to Low—Low Slew | | 0.090 | ns/pF |
| **3.3 V LVTTL Output Module Timing[1] ($V_{CCI}$ = 3.0 V)** | | | | |
| $t_{DLH}$ | Data-to-Pad Low to High | | 5.0 | ns |
| $t_{DHL}$ | Data-to-Pad High to Low | | 4.9 | ns |
| $t_{DHLS}$ | Data-to-Pad High to Low—Low Slew | | 17.4 | ns |
| $t_{ENZL}$ | Enable-to-Pad, Z to L | | 4.0 | ns |
| $t_{ENZLS}$ | Enable-to-Pad Z to L—Low Slew | | 17.4 | ns |
| $t_{ENZH}$ | Enable-to-Pad, Z to H | | 5.0 | ns |
| $t_{ENLZ}$ | Enable-to-Pad, L to Z | | 5.0 | ns |
| $t_{ENHZ}$ | Enable-to-Pad, H to Z | | 4.8 | ns |
| $d_{TLH}$ | Delta Delay vs. Load Low to High | | 0.038 | ns/pF |
| $d_{THL}$ | Delta Delay vs. Load High to Low | | 0.028 | ns/pF |
| $d_{THLS}$ | Delta Delay vs. Load High to Low—Low Slew | | 0.090 | ns/pF |

*Notes:*

1. *For dual-module macros, use $t_{PD} + t_{RD1} + t_{PDn}$, $t_{RCO} + t_{RD1} + t_{PDn}$ or $t_{PD1} + t_{RD1} + t_{SUD}$, whichever is appropriate.*
2. *Routing delays are for typical designs across worst-case operating conditions. These parameters should be used for estimating device performance. Post-route timing analysis or simulation is required to determine actual worst-case performance.*
3. *Clock skew improves as the clock network becomes more heavily loaded.*
4. *Delays based on 35 pF loading.*

# Pin Descriptions

**CLKA/B** **Routed Clock A and B**

These pins are clock inputs for clock distribution networks. Input levels are compatible with LVTTL and LVCMOS specifications. The clock input is buffered prior to clocking the R-cells. If not used, this pin must be set Low or High on the board. It must not be left floating.

**GND** **Ground**

Low supply voltage.

**HCLK** **Dedicated (Hardwired) Array Clock**

This pin is the clock input for sequential modules. Input levels are compatible with LVTTL and LVCMOS specifications. This input is directly wired to each R-cell and offers clock speeds independent of the number of R-cells being driven. If not used, this pin must be set Low or High on the board. It must not be left floating.

**I/O** **Input/Output**

The I/O pin functions as an input, output, tristate, or bidirectional buffer. Input and output levels are compatible with LVTTL and LVCMOS specifications. Unused I/O pins are automatically tristated by the Designer software. It is recommended to tie unused I/Os to Low on the board. This also applies to dual-purpose pins when configured as I/Os.

**NC** **No Connection**

This pin is not connected to circuitry within the device. These pins can be driven to any voltage or can be left floating with no effect on the operation of the device.

**PRA/PRB, I/O** **Probe A/B**

The Probe pin is used to output data from any user-defined design node within the device. This diagnostic pin can be used independently or in conjunction with the other probe pin to allow real-time diagnostic output of any signal path within the device. The Probe pin can be employed as a user-defined I/O when verification has been completed. The pin's probe capabilities can be permanently disabled to protect programmed design confidentiality.

**TCK, I/O** **Test Clock**

Test clock input for diagnostic probe and device programming. In flexible mode, TCK becomes active when the TMS pin is set Low (refer to Table 1-3 on page 1-9). This pin functions as an I/O when the boundary scan state machine reaches the "logic reset" state.

**TDI, I/O** **Test Data Input**

Serial input for boundary scan testing and diagnostic probe. In flexible mode, TDI is active when the TMS pin is set Low (refer to Table 1-3 on page 1-9). This pin functions as an I/O when the boundary scan state machine reaches the "logic reset" state.

**TDO, I/O** **Test Data Output**

Serial output for boundary scan testing. In flexible mode, TDO is active when the TMS pin is set Low (refer to Table 1-3 on page 1-9). This pin functions as an I/O when the boundary scan state machine reaches the "logic reset" state. When Silicon Explorer is being used, TDO will act as an output when the "checksum" command is run. It will return to a user I/O when "checksum" is complete.

**TMS** **Test Mode Select**

The TMS pin controls the use of the IEEE 1149.1 boundary scan pins (TCK, TDI, TDO, TRST). In flexible mode, when the TMS pin is set Low, the TCK, TDI, and TDO pins are boundary scan pins (refer to Table 1-3 on page 1-9). Once the boundary scan pins are in test mode, they will remain in that mode until the internal boundary scan state machine reaches the "logic reset" state. At this point, the boundary scan pins will be released and will function as regular I/O pins. The "logic reset" state is reached five TCK cycles after the TMS pin is set High. In dedicated test mode, TMS functions as specified in the IEEE 1149.1 specifications.

**TRST, I/O** **Boundary Scan Reset Pin**

Once it is configured as the JTAG Reset pin, the TRST pin functions as an active-low input to asynchronously initialize or reset the boundary scan circuit. The TRST pin is equipped with an internal pull-up resistor. This pin functions as an I/O when the “Reserve JTAG Reset Pin” is not selected in the Designer software.

**VCCI** **Supply Voltage**

Supply voltage for I/Os.

**VCCA** **Supply Voltage**

Supply voltage for Array.

# 2 – Package Pin Assignments

## TQ64

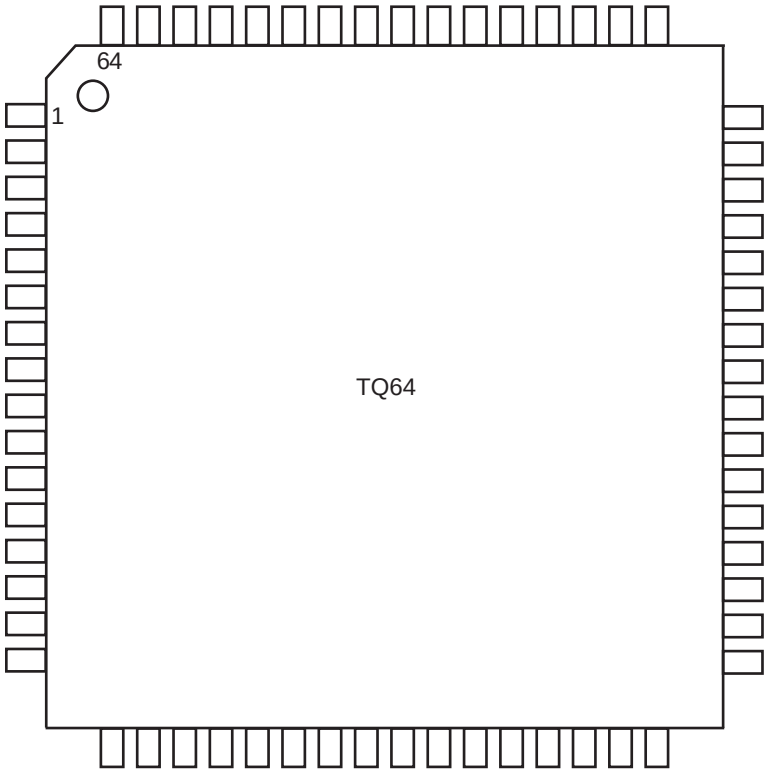


### *Note*

For Package Manufacturing and Environmental information, visit the Resource Center at http://www.microsemi.com/soc/products/rescenter/package/index.html.

| TQ64 | | |
|---|---|---|
| **Pin Number** | **eX64 Function** | **eX128 Function** |
| 1 | GND | GND |
| 2 | TDI, I/O | TDI, I/O |
| 3 | I/O | I/O |
| 4 | TMS | TMS |
| 5 | GND | GND |
| 6 | VCCI | VCCI |
| 7 | I/O | I/O |
| 8 | I/O | I/O |
| 9 | NC | I/O |
| 10 | NC | I/O |
| 11 | TRST, I/O | TRST, I/O |
| 12 | I/O | I/O |
| 13 | NC | I/O |
| 14 | GND | GND |
| 15 | I/O | I/O |
| 16 | I/O | I/O |
| 17 | I/O | I/O |
| 18 | I/O | I/O |
| 19 | VCCI | VCCI |
| 20 | I/O | I/O |
| 21 | PRB, I/O | PRB, I/O |
| 22 | VCCA | VCCA |
| 23 | GND | GND |
| 24 | I/O | I/O |
| 25 | HCLK | HCLK |
| 26 | I/O | I/O |
| 27 | I/O | I/O |
| 28 | I/O | I/O |
| 29 | I/O | I/O |
| 30 | I/O | I/O |
| 31 | I/O | I/O |
| 32 | TDO, I/O | TDO, I/O |

| TQ64 | | |
|---|---|---|
| **Pin Number** | **eX64 Function** | **eX128 Function** |
| 33 | GND | GND |
| 34 | I/O | I/O |
| 35 | I/O | I/O |
| 36 | VCCA | VCCA |
| 37 | VCCI | VCCI |
| 38 | I/O | I/O |
| 39 | I/O | I/O |
| 40 | NC | I/O |
| 41 | NC | I/O |
| 42 | I/O | I/O |
| 43 | I/O | I/O |
| 44 | VCCA | VCCA |
| 45 | GND | GND |
| 46 | GND | GND |
| 47 | I/O | I/O |
| 48 | I/O | I/O |
| 49 | I/O | I/O |
| 50 | I/O | I/O |
| 51 | I/O | I/O |
| 52 | VCCI | VCCI |
| 53 | I/O | I/O |
| 54 | I/O | I/O |
| 55 | CLKA | CLKA |
| 56 | CLKB | CLKB |
| 57 | VCCA | VCCA |
| 58 | GND | GND |
| 59 | PRA, I/O | PRA, I/O |
| 60 | I/O | I/O |
| 61 | VCCI | VCCI |
| 62 | I/O | I/O |
| 63 | I/O | I/O |
| 64 | TCK, I/O | TCK, I/O |

# TQ100

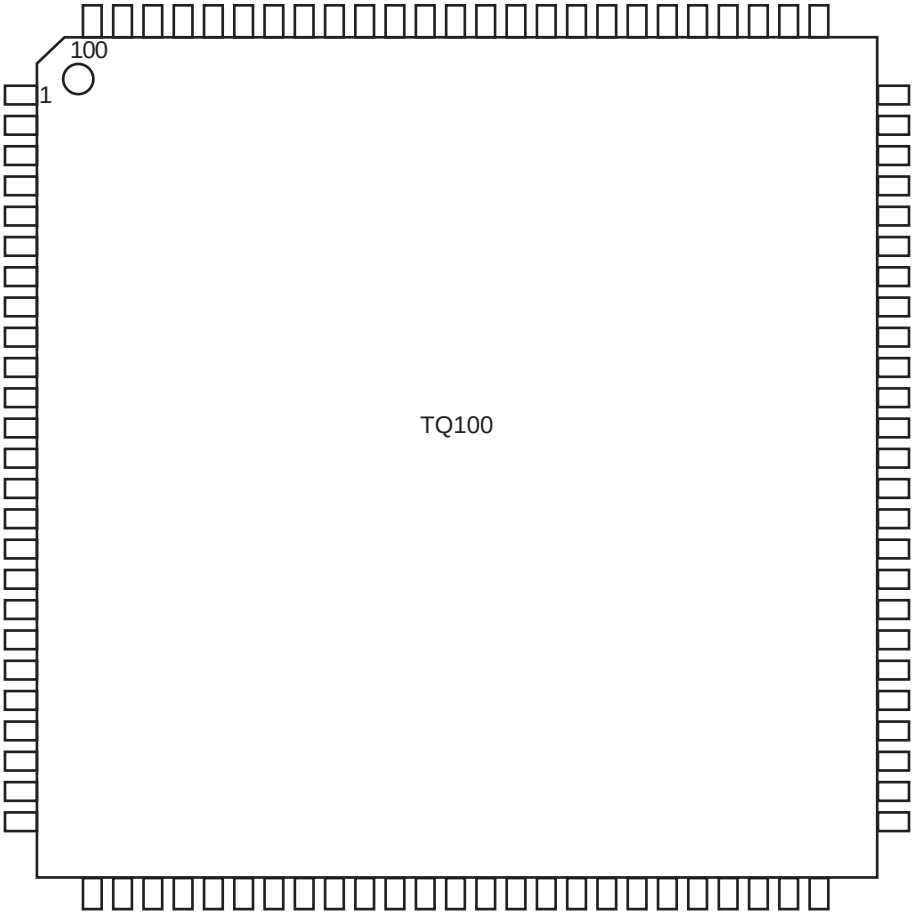


## Note

For Package Manufacturing and Environmental information, visit the Resource Center at http://www.microsemi.com/soc/products/rescenter/package/index.html.

| TQ100 | | | |
|---|---|---|---|
| Pin Number | eX64 Function | eX128 Function | eX256 Function |
| 1 | GND | GND | GND |
| 2 | TDI, I/O | TDI, I/O | TDI, I/O |
| 3 | NC | NC | I/O |
| 4 | NC | NC | I/O |
| 5 | NC | NC | I/O |
| 6 | I/O | I/O | I/O |
| 7 | TMS | TMS | TMS |
| 8 | VCCI | VCCI | VCCI |
| 9 | GND | GND | GND |
| 10 | NC | I/O | I/O |
| 11 | NC | I/O | I/O |
| 12 | I/O | I/O | I/O |
| 13 | NC | I/O | I/O |
| 14 | I/O | I/O | I/O |
| 15 | NC | I/O | I/O |
| 16 | TRST, I/O | TRST, I/O | TRST, I/O |
| 17 | NC | I/O | I/O |
| 18 | I/O | I/O | I/O |
| 19 | NC | I/O | I/O |
| 20 | VCCI | VCCI | VCCI |
| 21 | I/O | I/O | I/O |
| 22 | NC | I/O | I/O |
| 23 | NC | NC | I/O |
| 24 | NC | NC | I/O |
| 25 | I/O | I/O | I/O |
| 26 | I/O | I/O | I/O |
| 27 | I/O | I/O | I/O |
| 28 | I/O | I/O | I/O |
| 29 | I/O | I/O | I/O |
| 30 | I/O | I/O | I/O |
| 31 | I/O | I/O | I/O |
| 32 | I/O | I/O | I/O |
| 33 | I/O | I/O | I/O |
| 34 | PRB, I/O | PRB, I/O | PRB, I/O |
| 35 | VCCA | VCCA | VCCA |

| TQ100 | | | |
|---|---|---|---|
| Pin Number | eX64 Function | eX128 Function | eX256 Function |
| 36 | GND | GND | GND |
| 37 | NC | NC | NC |
| 38 | I/O | I/O | I/O |
| 39 | HCLK | HCLK | HCLK |
| 40 | I/O | I/O | I/O |
| 41 | I/O | I/O | I/O |
| 42 | I/O | I/O | I/O |
| 43 | I/O | I/O | I/O |
| 44 | VCCI | VCCI | VCCI |
| 45 | I/O | I/O | I/O |
| 46 | I/O | I/O | I/O |
| 47 | I/O | I/O | I/O |
| 48 | I/O | I/O | I/O |
| 49 | TDO, I/O | TDO, I/O | TDO, I/O |
| 50 | NC | I/O | I/O |
| 51 | GND | GND | GND |
| 52 | NC | NC | I/O |
| 53 | NC | NC | I/O |
| 54 | NC | NC | I/O |
| 55 | I/O | I/O | I/O |
| 56 | I/O | I/O | I/O |
| 57 | VCCA | VCCA | VCCA |
| 58 | VCCI | VCCI | VCCI |
| 59 | NC | I/O | I/O |
| 60 | I/O | I/O | I/O |
| 61 | NC | I/O | I/O |
| 62 | I/O | I/O | I/O |
| 63 | NC | I/O | I/O |
| 64 | I/O | I/O | I/O |
| 65 | NC | I/O | I/O |
| 66 | I/O | I/O | I/O |
| 67 | VCCA | VCCA | VCCA |
| 68 | GND | GND | GND |
| 69 | GND | GND | GND |
| 70 | I/O | I/O | I/O |

| TQ100 | | | |
|---|---|---|---|
| **Pin Number** | **eX64 Function** | **eX128 Function** | **eX256 Function** |
| 71 | I/O | I/O | I/O |
| 72 | NC | I/O | I/O |
| 73 | NC | NC | I/O |
| 74 | NC | NC | I/O |
| 75 | NC | NC | I/O |
| 76 | NC | I/O | I/O |
| 77 | I/O | I/O | I/O |
| 78 | I/O | I/O | I/O |
| 79 | I/O | I/O | I/O |
| 80 | I/O | I/O | I/O |
| 81 | I/O | I/O | I/O |
| 82 | VCCI | VCCI | VCCI |
| 83 | I/O | I/O | I/O |
| 84 | I/O | I/O | I/O |
| 85 | I/O | I/O | I/O |
| 86 | I/O | I/O | I/O |
| 87 | CLKA | CLKA | CLKA |
| 88 | CLKB | CLKB | CLKB |
| 89 | NC | NC | NC |
| 90 | VCCA | VCCA | VCCA |
| 91 | GND | GND | GND |
| 92 | PRA, I/O | PRA, I/O | PRA, I/O |
| 93 | I/O | I/O | I/O |
| 94 | I/O | I/O | I/O |
| 95 | I/O | I/O | I/O |
| 96 | I/O | I/O | I/O |
| 97 | I/O | I/O | I/O |
| 98 | I/O | I/O | I/O |
| 99 | I/O | I/O | I/O |
| 100 | TCK, I/O | TCK, I/O | TCK, I/O |

# CS49

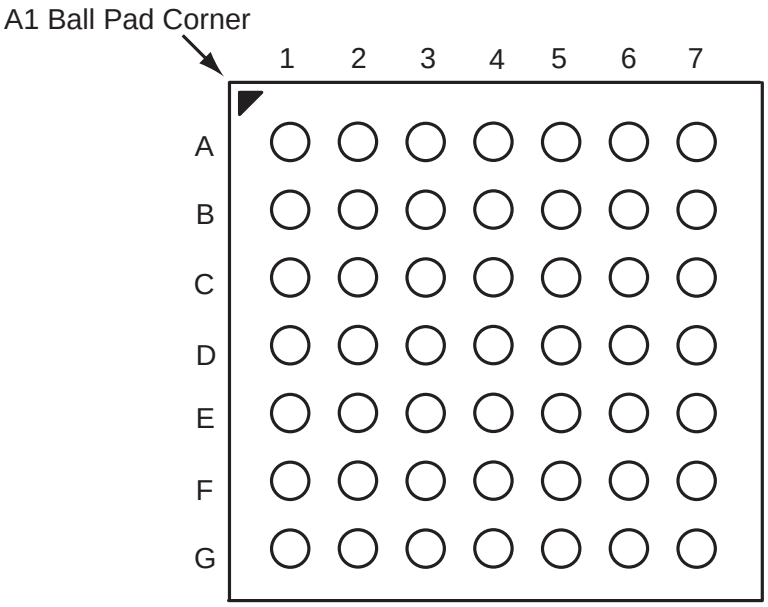


## *Note*

For Package Manufacturing and Environmental information, visit the Resource Center at http://www.microsemi.com/soc/products/rescenter/package/index.html.

| CS49 | | |
|---|---|---|
| **Pin Number** | **eX64 Function** | **eX128 Function** |
| A1 | I/O | I/O |
| A2 | I/O | I/O |
| A3 | I/O | I/O |
| A4 | I/O | I/O |
| A5 | VCCA | VCCA |
| A6 | I/O | I/O |
| A7 | I/O | I/O |
| B1 | TCK, I/O | TCK, I/O |
| B2 | I/O | I/O |
| B3 | I/O | I/O |
| B4 | PRA, I/O | PRA, I/O |
| B5 | CLKA | CLKA |
| B6 | I/O | I/O |
| B7 | GND | GND |
| C1 | I/O | I/O |
| C2 | TDI, I/O | TDI, I/O |
| C3 | VCCI | VCCI |
| C4 | GND | GND |
| C5 | CLKB | CLKB |
| C6 | VCCA | VCCA |
| C7 | I/O | I/O |
| D1 | I/O | I/O |
| D2 | TMS | TMS |
| D3 | GND | GND |
| D4 | GND | GND |

| CS49 | | |
|---|---|---|
| **Pin Number** | **eX64 Function** | **eX128 Function** |
| D5 | VCCA | VCCA |
| D6 | I/O | I/O |
| D7 | I/O | I/O |
| E1 | I/O | I/O |
| E2 | TRST, I/O | TRST, I/O |
| E3 | VCCI | VCCI |
| E4 | GND | GND |
| E5 | I/O | I/O |
| E6 | I/O | I/O |
| E7 | VCCI | VCCI |
| F1 | I/O | I/O |
| F2 | I/O | I/O |
| F3 | I/O | I/O |
| F4 | I/O | I/O |
| F5 | HCLK | HCLK |
| F6 | I/O | I/O |
| F7 | TDO, I/O | TDO, I/O |
| G1 | I/O | I/O |
| G2 | I/O | I/O |
| G3 | I/O | I/O |
| G4 | PRB, I/O | PRB, I/O |
| G5 | VCCA | VCCA |
| G6 | I/O | I/O |
| G7 | I/O | I/O |

# CS128

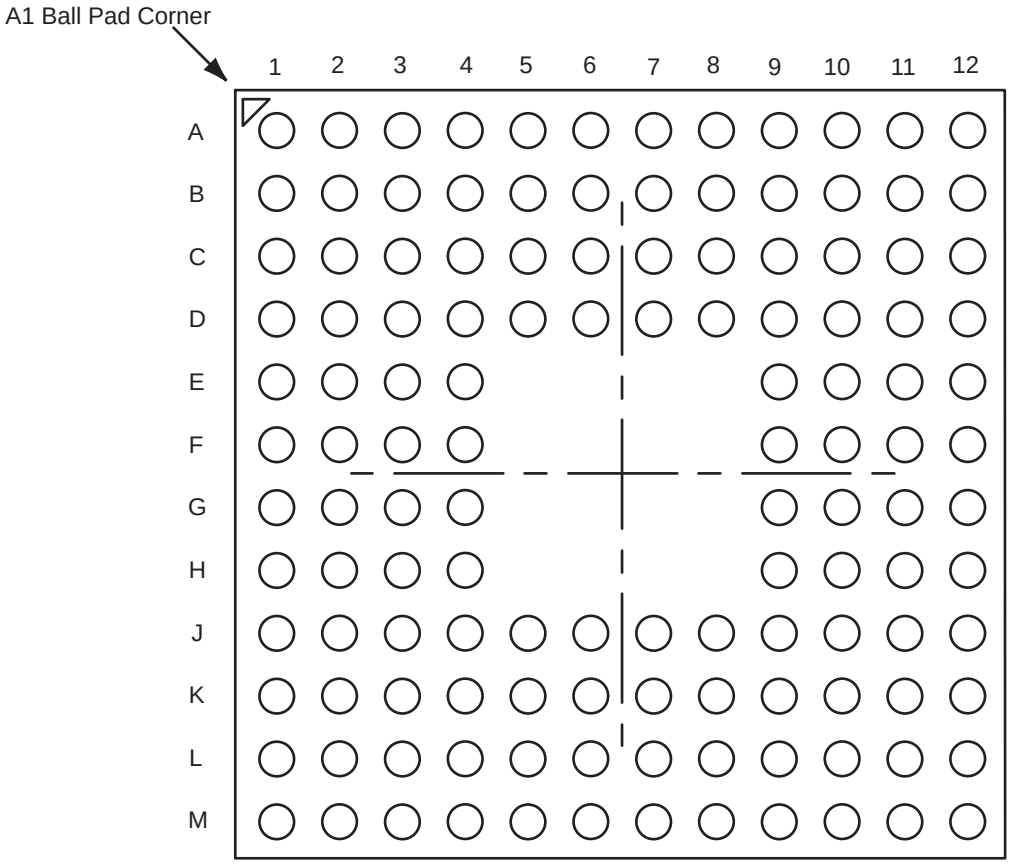


## Note

For Package Manufacturing and Environmental information, visit the Resource Center at http://www.microsemi.com/soc/products/rescenter/package/index.html.

| CS128 | | | |
|---|---|---|---|
| Pin Number | eX64 Function | eX128 Function | eX256 Function |
| A1 | I/O | I/O | I/O |
| A2 | TCK, I/O | TCK, I/O | TCK, I/O |
| A3 | VCCI | VCCI | VCCI |
| A4 | I/O | I/O | I/O |
| A5 | I/O | I/O | I/O |
| A6 | VCCA | VCCA | VCCA |
| A7 | I/O | I/O | I/O |
| A8 | I/O | I/O | I/O |
| A9 | VCCI | VCCI | VCCI |
| A10 | I/O | I/O | I/O |
| A11 | I/O | I/O | I/O |
| A12 | I/O | I/O | I/O |
| B1 | TMS | TMS | TMS |
| B2 | I/O | I/O | I/O |
| B3 | I/O | I/O | I/O |
| B4 | I/O | I/O | I/O |
| B5 | I/O | I/O | I/O |
| B6 | PRA, I/O | PRA, I/O | PRA, I/O |
| B7 | CLKB | CLKB | CLKB |
| B8 | I/O | I/O | I/O |
| B9 | I/O | I/O | I/O |
| B10 | I/O | I/O | I/O |
| B11 | GND | GND | GND |
| B12 | I/O | I/O | I/O |
| C1 | I/O | I/O | I/O |
| C2 | TDI, I/O | TDI, I/O | TDI, I/O |
| C3 | I/O | I/O | I/O |
| C4 | I/O | I/O | I/O |
| C5 | I/O | I/O | I/O |
| C6 | CLKA | CLKA | CLKA |
| C7 | I/O | I/O | I/O |
| C8 | I/O | I/O | I/O |
| C9 | I/O | I/O | I/O |
| C10 | NC | I/O | I/O |
| C11 | NC | I/O | I/O |

| CS128 | | | |
|---|---|---|---|
| Pin Number | eX64 Function | eX128 Function | eX256 Function |
| C12 | I/O | I/O | I/O |
| D1 | NC | I/O | I/O |
| D2 | I/O | I/O | I/O |
| D3 | I/O | I/O | I/O |
| D4 | I/O | I/O | I/O |
| D5 | I/O | I/O | I/O |
| D6 | GND | GND | GND |
| D7 | I/O | I/O | I/O |
| D8 | GND | GND | GND |
| D9 | I/O | I/O | I/O |
| D10 | I/O | I/O | I/O |
| D11 | I/O | I/O | I/O |
| D12 | VCCI | VCCI | VCCI |
| E1 | NC | I/O | I/O |
| E2 | VCCI | VCCI | VCCI |
| E3 | I/O | I/O | I/O |
| E4 | GND | GND | GND |
| E9 | GND | GND | GND |
| E10 | I/O | I/O | I/O |
| E11 | GND | GND | GND |
| E12 | VCCA | VCCA | VCCA |
| F1 | NC | I/O | I/O |
| F2 | NC | I/O | I/O |
| F3 | NC | I/O | I/O |
| F4 | I/O | I/O | I/O |
| F9 | GND | GND | GND |
| F10 | NC | I/O | I/O |
| F11 | I/O | I/O | I/O |
| F12 | I/O | I/O | I/O |
| G1 | NC | I/O | I/O |
| G2 | TRST, I/O | TRST, I/O | TRST, I/O |
| G3 | I/O | I/O | I/O |
| G4 | GND | GND | GND |
| G9 | GND | GND | GND |
| G10 | NC | I/O | I/O |

| CS128 | | | |
|---|---|---|---|
| Pin Number | eX64 Function | eX128 Function | eX256 Function |
| G11 | I/O | I/O | I/O |
| G12 | NC | I/O | I/O |
| H1 | GND | GND | GND |
| H2 | I/O | I/O | I/O |
| H3 | VCCI | VCCI | VCCI |
| H4 | GND | GND | GND |
| H9 | I/O | I/O | I/O |
| H10 | VCCI | VCCI | VCCI |
| H11 | VCCA | VCCA | VCCA |
| H12 | NC | I/O | I/O |
| J1 | NC | NC | VCCA |
| J2 | I/O | I/O | I/O |
| J3 | VCCI | VCCI | VCCI |
| J4 | I/O | I/O | I/O |
| J5 | I/O | I/O | I/O |
| J6 | I/O | I/O | I/O |
| J7 | GND | GND | GND |
| J8 | I/O | I/O | I/O |
| J9 | GND | GND | GND |
| J10 | I/O | I/O | I/O |
| J11 | I/O | I/O | I/O |
| J12 | NC | I/O | I/O |
| K1 | NC | I/O | I/O |
| K2 | I/O | I/O | I/O |
| K3 | I/O | I/O | I/O |
| K4 | I/O | I/O | I/O |
| K5 | I/O | I/O | I/O |
| K6 | PRB, I/O | PRB, I/O | PRB, I/O |
| K7 | HCLK | HCLK | HCLK |

| CS128 | | | |
|---|---|---|---|
| Pin Number | eX64 Function | eX128 Function | eX256 Function |
| K8 | I/O | I/O | I/O |
| K9 | I/O | I/O | I/O |
| K10 | I/O | I/O | I/O |
| K11 | TDO, I/O | TDO, I/O | TDO, I/O |
| K12 | I/O | I/O | I/O |
| L1 | I/O | I/O | I/O |
| L2 | I/O | I/O | I/O |
| L3 | NC | I/O | I/O |
| L4 | I/O | I/O | I/O |
| L5 | I/O | I/O | I/O |
| L6 | I/O | I/O | I/O |
| L7 | I/O | I/O | I/O |
| L8 | I/O | I/O | I/O |
| L9 | I/O | I/O | I/O |
| L10 | I/O | I/O | I/O |
| L11 | NC | I/O | I/O |
| L12 | VCCI | VCCI | VCCI |
| M1 | GND | GND | GND |
| M2 | I/O | I/O | I/O |
| M3 | I/O | I/O | I/O |
| M4 | I/O | I/O | I/O |
| M5 | I/O | I/O | I/O |
| M6 | I/O | I/O | I/O |
| M7 | VCCA | VCCA | VCCA |
| M8 | I/O | I/O | I/O |
| M9 | I/O | I/O | I/O |
| M10 | I/O | I/O | I/O |
| M11 | I/O | I/O | I/O |
| M12 | I/O | I/O | I/O |

# CS180

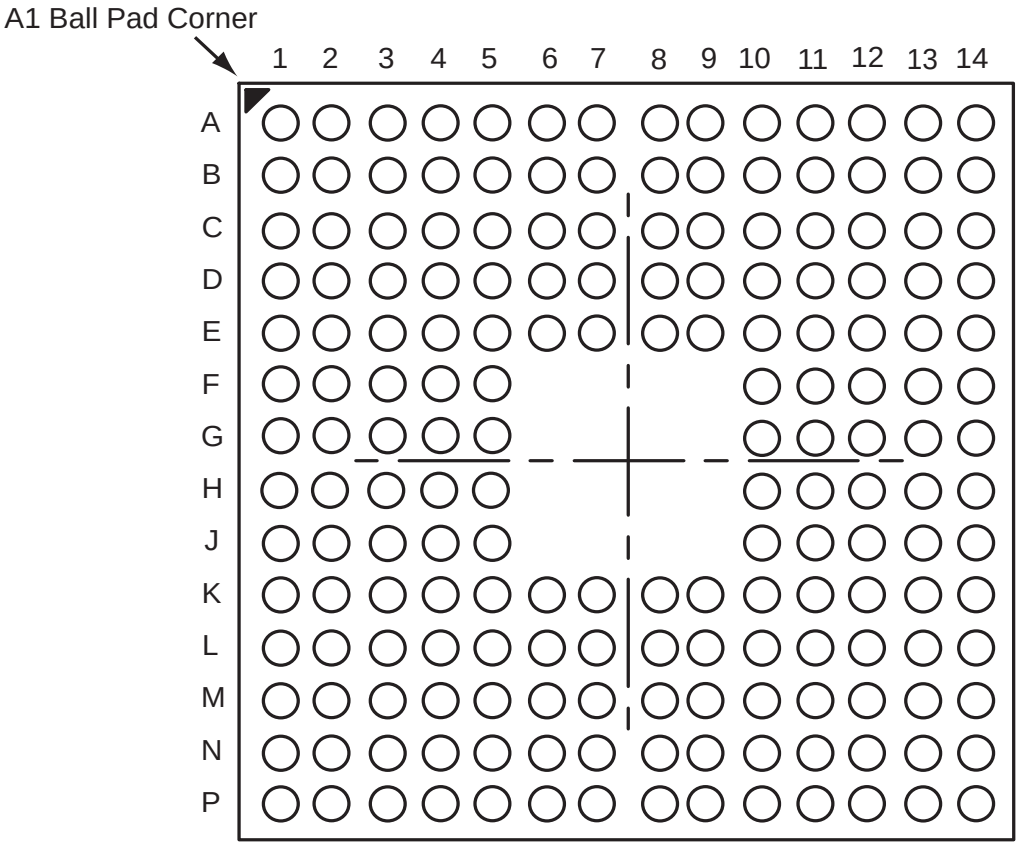


## *Note*

For Package Manufacturing and Environmental information, visit the Resource Center at http://www.microsemi.com/soc/products/rescenter/package/index.html.

| CS180 | | CS180 | | CS180 | | CS180 | |
|---|---|---|---|---|---|---|---|
| Pin Number | eX256 Function | Pin Number | eX256 Function | Pin Number | eX256 Function | Pin Number | eX256 Function |
| A1 | I/O | C6 | I/O | E11 | I/O | H14 | I/O |
| A2 | I/O | C7 | PRA, I/O | E12 | I/O | J1 | I/O |
| A3 | GND | C8 | CLKB | E13 | VCCI | J2 | GND |
| A4 | NC | C9 | I/O | E14 | I/O | J3 | I/O |
| A5 | NC | C10 | I/O | F1 | I/O | J4 | VCCI |
| A6 | NC | C11 | I/O | F2 | I/O | J5 | GND |
| A7 | NC | C12 | GND | F3 | VCCI | J10 | I/O |
| A8 | NC | C13 | I/O | F4 | I/O | J11 | VCCI |
| A9 | NC | C14 | I/O | F5 | GND | J12 | VCCA |
| A10 | NC | D1 | I/O | F10 | GND | J13 | I/O |
| A11 | NC | D2 | I/O | F11 | I/O | J14 | I/O |
| A12 | I/O | D3 | TDI, I/O | F12 | GND | K1 | I/O |
| A13 | I/O | D4 | I/O | F13 | VCCA | K2 | VCCA |
| A14 | I/O | D5 | I/O | F14 | I/O | K3 | I/O |
| B1 | I/O | D6 | I/O | G1 | VCCA | K4 | VCCI |
| B2 | I/O | D7 | CLKA | G2 | I/O | K5 | I/O |
| B3 | TCK, I/O | D8 | I/O | G3 | I/O | K6 | I/O |
| B4 | VCCI | D9 | I/O | G4 | I/O | K7 | I/O |
| B5 | I/O | D10 | I/O | G5 | I/O | K8 | GND |
| B6 | I/O | D11 | I/O | G10 | GND | K9 | I/O |
| B7 | VCCA | D12 | I/O | G11 | I/O | K10 | GND |
| B8 | I/O | D13 | I/O | G12 | I/O | K11 | I/O |
| B9 | I/O | D14 | I/O | G13 | I/O | K12 | I/O |
| B10 | VCCI | E1 | I/O | G14 | VCCA | K13 | I/O |
| B11 | I/O | E2 | I/O | H1 | I/O | K14 | I/O |
| B12 | I/O | E3 | I/O | H2 | I/O | L1 | I/O |
| B13 | I/O | E4 | I/O | H3 | TRST, I/O | L2 | I/O |
| B14 | I/O | E5 | I/O | H4 | I/O | L3 | I/O |
| C1 | I/O | E6 | I/O | H5 | GND | L4 | I/O |
| C2 | TMS | E7 | GND | H10 | GND | L5 | I/O |
| C3 | I/O | E8 | I/O | H11 | I/O | L6 | I/O |
| C4 | I/O | E9 | GND | H12 | I/O | L7 | PRB, I/O |
| C5 | I/O | E10 | I/O | H13 | I/O | L8 | HCLK |

| CS180 | |
|---|---|
| Pin Number | eX256 Function |
| L9 | I/O |
| L10 | I/O |
| L11 | I/O |
| L12 | TDO, I/O |
| L13 | I/O |
| L14 | I/O |
| M1 | I/O |
| M2 | I/O |
| M3 | I/O |
| M4 | I/O |
| M5 | I/O |
| M6 | I/O |
| M7 | I/O |
| M8 | I/O |
| M9 | I/O |
| M10 | I/O |
| M11 | I/O |
| M12 | I/O |
| M13 | VCCI |
| M14 | I/O |
| N1 | I/O |
| N2 | GND |
| N3 | I/O |
| N4 | I/O |
| N5 | I/O |
| N6 | I/O |
| N7 | I/O |
| N8 | VCCA |
| N9 | I/O |
| N10 | I/O |
| N11 | I/O |
| N12 | I/O |
| N13 | I/O |

| CS180 | |
|---|---|
| Pin Number | eX256 Function |
| N14 | I/O |
| P1 | I/O |
| P2 | I/O |
| P3 | I/O |
| P4 | NC |
| P5 | NC |
| P6 | NC |
| P7 | NC |
| P8 | NC |
| P9 | NC |
| P10 | NC |
| P11 | NC |
| P12 | GND |
| P13 | I/O |

# 3 – Datasheet Information

## List of Changes

The following table lists critical changes that were made in the current version of the document.

| Revision | Changes | Page |
|---|---|---|
| Revision 5 (October 2012) | The datasheet was updated for Microsemi, including hyperlinks to the Microsemi SoC Products Group website. The versioning system has been changed. Datasheets are assigned a revision number that increments each time the datasheet is revised. | All |
| | The "Features" section and "User Security" section were updated to clarify that although no existing security measures can give an absolute guarantee, Microsemi FPGAs implement industry standard security (SAR 34676). | i, 1-5 |
| | Package names used in the product profile tables and "Package Pin Assignments" section section were revised to match standards given in *Package Mechanical Drawings* (SAR 34778). | i, 2-1 |
| v3.2 (June 2006) | The "Ordering Information" section was updated to include RoHS information. The TQFP measurement was also updated. | ii |
| | The "Dedicated Test Mode" section was updated. | 1-9 |
| | Note 4 was added to the"3.3 V LVTTL Electrical Specifications" table. | 1-16 |
| v3.1 (April 2006) | A note was added to the "Ordering Information" section. | ii |
| | The Junction temperature was added to Table 1-8 • Absolute Maximum Ratings*. | 1-15 |
| | The note was changed in Table 1-9 • Recommended Operating Conditions. | 1-15 |
| | The IOH and IOL values were updated in the "3.3 V LVTTL Electrical Specifications" table. | 1-16 |
| | The "5 V Tolerance of 3.3 V LVTTL I/Os Using a Tristate Buffer" section is new. | 1-17 |
| | A reference to Table 1-9 • Recommended Operating Conditions was added to the "Junction Temperature". | 1-15 |
| v3.0 (June 2004) | The "Speed Grade and Temperature Grade Matrix" table is new. | ii |
| | Table 1-2 • I/O Features was updated. | 1-6 |
| | Table 1-9 • Recommended Operating Conditions was updated. | 1-15 |
| | The "CEQ Values for eX Devices" section is new. | 1-18 |
| | The "Package Thermal Characteristics" section was updated. | 1-19 |
| | Table 1-14 • Input Buffer Delays was updated. | 1-22 |
| | Figure 1-15 • eX Timing Model was updated. | 1-20 |
| | The "Pin Descriptions" section was updated. | 1-28 |

# Datasheet Categories

### *Categories*

In order to provide the latest information to designers, some datasheet parameters are published before data has been fully characterized from silicon devices. The data provided is designated as either "Product Brief," "Advance," "Preliminary," or "Production." The definitions of these categories are as follows:

### *Product Brief*

The product brief is a summarized version of a datasheet (advance or production) and contains general product information. This document gives an overview of specific device and family information.

### *Advance*

This version contains initial estimated information based on simulation, other products, devices, or speed grades. This information can be used as estimates, but not for production. This label only applies to the DC and Switching Characteristics chapter of the datasheet and will only be used when the data has not been fully characterized.

### *Preliminary*

The datasheet contains information based on simulation and/or initial characterization. The information is believed to be correct, but changes are possible.

### *Production*

This version contains information that is considered to be final.

# Export Administration Regulations (EAR)

The product described in this datasheet is subject to the Export Administration Regulations (EAR). They could require an approved export license prior to export from the United States. An export includes release of product or disclosure of technology to a foreign national inside or outside the United States.

**Microsemi Corporate Headquarters**
One Enterprise, Aliso Viejo CA 92656 USA
Within the USA: +1 (949) 380-6100
Sales: +1 (949) 380-6136
Fax: +1 (949) 215-4996

Microsemi Corporation (NASDAQ: MSCC) offers a comprehensive portfolio of semiconductor solutions for: aerospace, defense and security; enterprise and communications; and industrial and alternative energy markets. Products include high-performance, high-reliability analog and RF devices, mixed signal and RF integrated circuits, customizable SoCs, FPGAs, and complete subsystems. Microsemi is headquartered in Aliso Viejo, Calif. Learn more at **www.microsemi.com**.

© 2012 Microsemi Corporation. All rights reserved. Microsemi and the Microsemi logo are trademarks of Microsemi Corporation. All other trademarks and service marks are the property of their respective owners.

51700017-5/10.12