BOARD LEVEL HEAT SINK

LDM-001A-0503-1 (AL5052 T=0.8 mm Black Anodized)

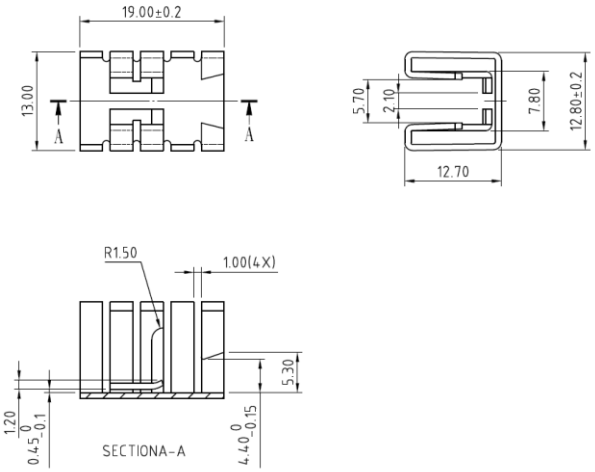

Thermal Resistance 27.3

Package Cooled TO-220
TO-262

LDM-001A-0503-C (AL5052 T=0.8 mm Clean Only)

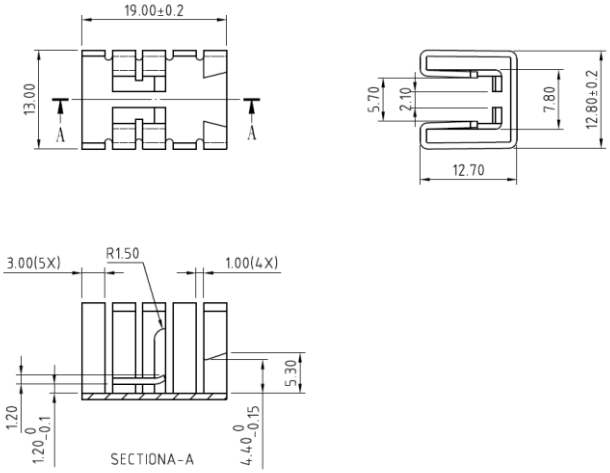

Thermal Resistance 27.3

Package Cooled TO-220
TO-262

LDM-001A-0504 (AL5052 T=0.8 mm Black Anodized)

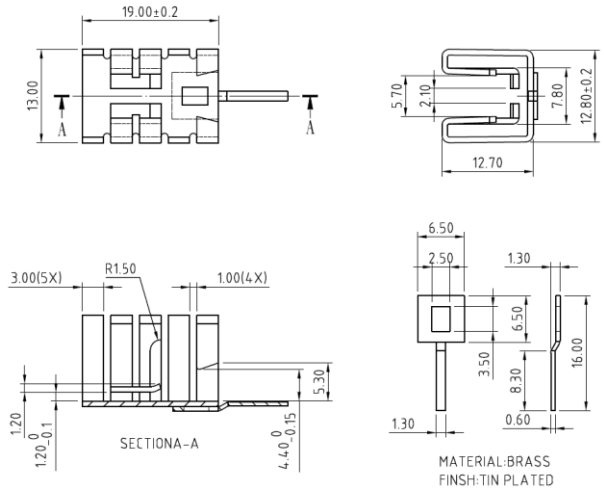

Thermal Resistance 27.3

Package Cooled TO-220
TO-262

www.lungder.com.tw
Taiwan Tel：+886-7-7883776 email：Brian@lungder.com.tw
Philippines Tel：+63-046-4234017 email：Barbie@lungder.com.tw