TLV237x 500-µA/Ch, 3-MHz Rail-to-Rail Input and Output Operational Amplifiers With Shutdown

1 Features

- Rail-to-Rail Input and Output
- Wide Bandwidth: 3 MHz
- High Slew Rate: 2.4 V/µs
- Supply Voltage Range: 2.7 V to 16 V
- Supply Current: 550 µA/Channel
- Low-Power Shutdown Mode
  - $I_{DD(SHDN)}$: 25 µA/Channel
- Input Noise Voltage: 39 nV/√Hz
- Input Bias Current: 1 pA
- Specified Temperature Range:
  - −40°C to +125°C (Industrial Grade)
- Ultra-Small Packaging:
  - 5- or 6-Pin SOT-23 (TLV2370, TLV2371)
  - 8- or 10-Pin MSOP (TLV2372, TLV2373)

2 Applications

- White Goods
- Handheld Test Equipment
- Portable Blood Glucose Systems
- Remote Sensing
- Active Filters
- Industrial Automation
- Battery-Powered Electronics

Operational Amplifier

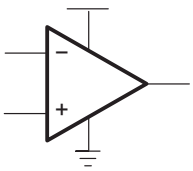

3 Description

The TLV237x single-supply operational amplifiers provide rail-to-rail input and output capability. The TLV237x takes the minimum operating supply voltage down to 2.7 V over the extended industrial temperature range while adding the rail-to-rail output swing feature. The TLV237x also provides 3-MHz bandwidth from only 550 µA. The maximum recommended supply voltage is 16 V, which allows the devices to be operated from (±8-V supplies down to ±1.35 V) a variety of rechargeable cells.

The CMOS inputs enable use in high-impedance sensor interfaces, with the lower voltage operation making an ideal alternative for the TLC227x in battery-powered applications. The rail-to-rail input stage further increases its versatility. The TLV237x is the seventh member of a rapidly growing number of RRIO products available from TI, and it is the first to allow operation up to 16-V rails with good ac performance.

All members are available in PDIP and SOIC with the singles in the small SOT-23 package, duals in the MSOP, and quads in the TSSOP package.

The 2.7-V operation makes the TLV237x compatible with Li-Ion powered systems and the operating supply voltage range of many micro-power microcontrollers available today including TI's MSP430.

Device Information(1)

PART NUMBER	PACKAGE	BODY SIZE (NOM)
TLV237x	PDIP (8)	9.81 mm × 6.35 mm
	PDIP (14)	19.30 mm × 6.35 mm
	SOIC (8)	4.90 mm × 3.91 mm
	SOIC (14)	8.65 mm × 3.91 mm
	TSSOP (14)	5.00 mm × 4.40 mm
	TSSOP (16)	
	SOT-23 (6)	2.90 mm × 1.60 mm
	SOT-23 (5)	
	VSSOP (8)	3.00 mm × 3.00 mm
	VSSOP (10)	

(1) For all available packages, see the orderable addendum at the end of the data sheet.

An IMPORTANT NOTICE at the end of this data sheet addresses availability, warranty, changes, use in safety-critical applications, intellectual property matters and other important disclaimers. PRODUCTION DATA.

Table of Contents

1 Features ... 1
2 Applications ... 1
3 Description ... 1
4 Revision History ... 2
5 Device Comparison Tables ... 3
6 Pin Configuration and Functions ... 3
7 Specifications ... 8
7.1 Absolute Maximum Ratings ... 8
7.2 Recommended Operating Conditions ... 8
7.3 Thermal Information: TLV2370 ... 9
7.4 Thermal Information: TLV2371 ... 9
7.5 Thermal Information: TLV2372 ... 9
7.6 Thermal Information: TLV2373 ... 10
7.7 Thermal Information: TLV2374 ... 10
7.8 Thermal Information: TLV2375 ... 10
7.9 Electrical Characteristics ... 11
7.10 Typical Characteristics ... 15
8 Detailed Description ... 22
8.1 Overview ... 22
8.2 Functional Block Diagram ... 22
8.3 Feature Description ... 22
8.4 Device Functional Modes ... 24
9 Application and Implementation ... 25
9.1 Application Information ... 25
9.2 Typical Application ... 25
10 Power Supply Recommendations ... 27
11 Layout ... 27
11.1 Layout Guidelines ... 27
11.2 Layout Example ... 27
11.3 Power Dissipation Considerations ... 28
12 Device and Documentation Support ... 29
12.1 Documentation Support ... 29
12.2 Related Links ... 29
12.3 Receiving Notification of Documentation Updates 29
12.4 Community Resources ... 29
12.5 Trademarks ... 29
12.6 Electrostatic Discharge Caution ... 29
12.7 Glossary ... 29
13 Mechanical, Packaging, and Orderable Information ... 30

4 Revision History

Changes from Revision E (May 2016) to Revision F	Page
• Changed names of pins 2 and 3 in TLV2372 D, DGK, and P packages pinout diagram	4

Changes from Revision D (January 2005) to Revision E	Page
• Added *ESD Ratings* table, *Feature Description* section, *Device Functional Modes*, *Application and Implementation* section, *Power Supply Recommendations* section, *Layout* section, *Device and Documentation Support* section, and *Mechanical, Packaging, and Orderable Information* section.	1
• Deleted *TLV2370 and TLV2371 Available Options*, *TLV2372 AND TLV2373 Available Options*, and *TLV2374 and TLV2375 Available Options* tables	3
• Deleted *Continuous total power dissipation* and *lead temperature* specifications from *Absolute Maximum Ratings* table	8
• Deleted *Dissipation Ratings* table	14

Copyright © 2001–2016, Texas Instruments Incorporated

5 Device Comparison Tables

Table 1. Selection of Signal Amplifier Products (1)

DEVICE	V_{DD} (V)	V_{IO} (µV)	I_Q/Ch (µA)	I_{IB} (pA)	GBW (MHz)	SR (V/µs)	SHUTDOWN	RAIL-TO-RAIL	SINGLES, DUALS, QUADS
TLV237x	2.7 to 16	500	550	1	3	2.4	Yes	I/O	S, D, Q
TLC227x	4 to 16	300	1100	1	2.2	3.6	—	O	D, Q
TLV27x	2.7 to 16	500	550	1	3	2.4	—	O	S, D, Q
TLC27x	3 to 16	1100	675	1	1.7	3.6	—	—	S, D, Q
TLV246x	2.7 to 16	150	550	1300	6.4	1.6	Yes	I/O	S, D, Q
TLV247x	2.7 to 16	250	600	2	2.8	1.5	Yes	I/O	S, D, Q
TLV244x	2.7 to 10	300	725	1	1.8	1.4	—	O	D, Q

(1) Typical values measured at 5 V and 25°C.

Table 2. Family Package Table (1)

DEVICE	NUMBER OF CHANNELS	PACKAGE TYPES					SHUTDOWN	UNIVERSAL EVM BOARD
		PDIP	SOIC	SOT-23	TSSOP	MSOP		
TLV2370	1	8	8	6	—	—	Yes	See the *EVM Selection Guide*
TLV2371	1	8	8	5	—	—	—	
TLV2372	2	8	8	—	—	8	—	
TLV2373	2	14	14	—	—	10	Yes	
TLV2374	4	14	14	—	14	—	—	
TLV2375	4	16	16	—	16	—	Yes	

(1) For the most current package and ordering information, see the Package Option Addendum at the end of this document, or see the TI website at www.ti.com.

6 Pin Configuration and Functions

TLV2370 DBV Package
6-Pin SOT-23
Top View

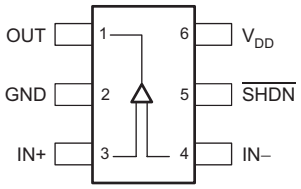

TLV2370 D and P Packages
8-Pin SOIC and PDIP
Top View

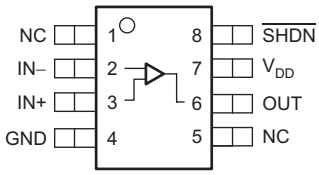

Pin Functions: TLV2370

PIN			I/O	DESCRIPTION
NAME	SOT-23	SOIC, PDIP		
GND	2	4	—	Ground connection
IN–	4	2	I	Negative (inverting) input
IN+	3	3	I	Positive (noninverting) input
NC	—	1, 5	—	No internal connection (can be left floating)
OUT	1	6	O	Output
$\overline{SHDN}$	5	8	I	Shutdown control (active low, can be left floating)
V_{DD}	6	7	—	Positive power supply

Copyright © 2001–2016, Texas Instruments Incorporated

TLV2371 DBV Package
5-Pin SOT-23
Top View

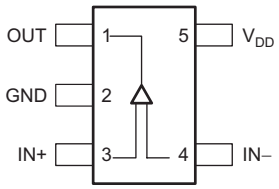

TLV2371 D and P Packages
8-Pin SOIC and PDIP
Top View

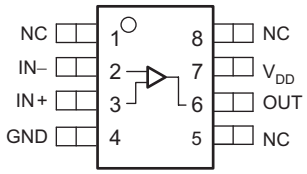

Pin Functions: TLV2371

PIN			I/O	DESCRIPTION
NAME	SOT-23	SOIC, PDIP		
GND	2	4	—	Ground connection
IN–	4	2	I	Negative (inverting) input
IN+	3	3	I	Positive (noninverting) input
NC	—	1, 5, 8	—	No internal connection (can be left floating)
OUT	1	6	O	Output
V_{DD}	5	7	—	Positive power supply

TLV2372 D, DGK, and P Packages
8-Pin SOIC, VSSOP, and PDIP
Top View

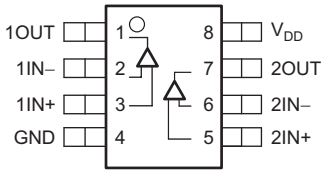

Pin Functions: TLV2372

PIN		I/O	DESCRIPTION
NAME	SOIC, VSSOP, PDIP		
GND	4	—	Ground connection
1IN–	2	I	Inverting input, channel 1
1IN+	3	I	Noninverting input, channel 1
2IN–	6	I	Inverting input, channel 2
2IN+	5	I	Noninverting input, channel 2
1OUT	1	O	Output, channel 1
2OUT	7	O	Output, channel 2
V_{DD}	8	—	Positive power supply

Copyright © 2001–2016, Texas Instruments Incorporated

TLV2373 DGS Package
10-Pin VSSOP
Top View

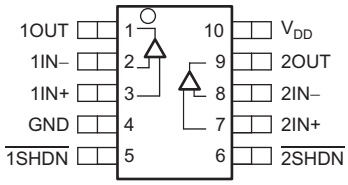

TLV2373 D and N Packages
14-Pin SOIC and PDIP
Top View

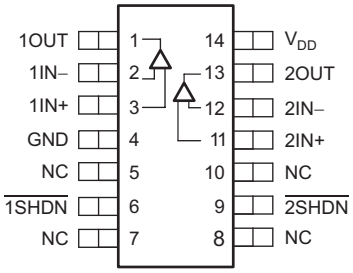

Pin Functions: TLV2373

PIN			I/O	DESCRIPTION
NAME	SOIC, PDIP	VSSOP		
GND	4	4	—	Ground connection
1IN–	2	2	I	Inverting input, channel 1
1IN+	3	3	I	Noninverting input, channel 1
2IN–	12	8	I	Inverting input, channel 2
2IN+	11	7	I	Noninverting input, channel 2
1OUT	1	1	O	Output, channel 1
2OUT	13	9	O	Output, channel 2
$\overline{1SHDN}$	6	5	I	Shutdown control, channel 1, (active low, can be left floating)
$\overline{2SHDN}$	9	6	I	Shutdown control, channel 2, (active low, can be left floating)
V_{DD}	14	10	—	Positive power supply
NC	5, 7, 8, 10	—	—	No internal connection (can be left floating)

Copyright © 2001–2016, Texas Instruments Incorporated

TLV2374 D, N, and PW Packages
14-Pin SOIC, PDIP, and TSSOP
Top View

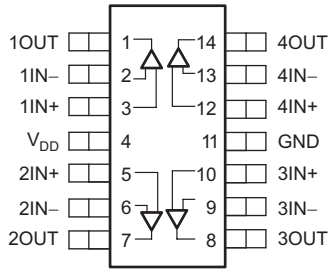

Pin Functions: TLV2374

PIN		I/O	DESCRIPTION
NAME	SOIC, PDIP, TSSOP		
GND	11	—	Ground connection
1IN–	2	I	Inverting input, channel 1
1IN+	3	I	Noninverting input, channel 1
2IN–	6	I	Inverting input, channel 2
2IN+	5	I	Noninverting input, channel 2
3IN–	9	I	Inverting input, channel 3
3IN+	10	I	Noninverting input, channel 3
4IN–	13	I	Inverting input, channel 4
4IN+	12	I	Noninverting input, channel 4
1OUT	1	O	Output, channel 1
2OUT	7	O	Output, channel 2
3OUT	8	O	Output, channel 3
4OUT	14	O	Output, channel 4
V_{DD}	4	—	Positive power supply

Copyright © 2001–2016, Texas Instruments Incorporated

TLV2375 D, N, and PW Packages
16-Pin SOIC, PDIP, and TSSOP
Top View

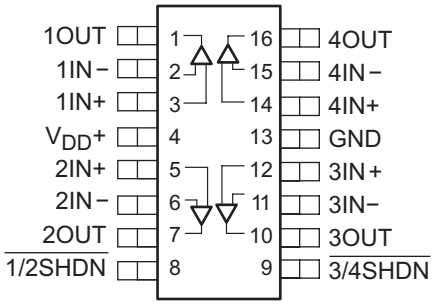

Pin Functions: TLV2375

PIN		I/O	DESCRIPTION
NAME	SOIC, PDIP, TSSOP		
GND	13	—	Ground connection
1IN–	2	I	Inverting input, channel 1
2IN–	6	I	Inverting input, channel 2
3IN–	11	I	Inverting input, channel 3
4IN–	15	I	Inverting input, channel 4
1IN+	3	I	Noninverting input, channel 1
2IN+	5	I	Noninverting input, channel 2
3IN+	12	I	Noninverting input, channel 3
4IN+	14	I	Noninverting input, channel 4
1OUT	1	O	Output, channel 1
2OUT	7	O	Output, channel 2
3OUT	10	O	Output, channel 3
4OUT	16	O	Output, channel 4
$\overline{1/2SHDN}$	8	I	Shutdown control, channels 1 and 2, (active low, can be left floating)
$\overline{3/4SHDN}$	9	I	Shutdown control, channels 3 and 4, (active low, can be left floating)
V_{DD}	4	—	Positive power supply

TYPICAL PIN 1 INDICATORS

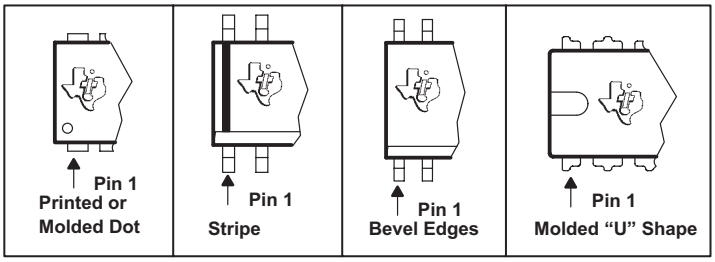

If there is not a Pin 1 indicator, turn device to enable reading the symbol from the left to right. Pin 1 is at the lower left corner of the device.

Figure 1. Typical Pin 1 Indicators

7 Specifications

7.1 Absolute Maximum Ratings

over operating free-air temperature range (unless otherwise noted)[1]

		MIN	MAX	UNIT
Voltage	Supply voltage, V_{DD} [2]		16.5	V
	Differential input voltage, V_{ID}	$-V_{DD}$	V_{DD}	
	Input voltage, V_I[2]	–0.2	V_{DD} + 0.2	
Current	Input current, I_{IN}	–10	10	mA
	Output current, I_O	–100	100	
Temperature	Operating free-air temperature, T_A: I-suffix	–40	125	°C
	Maximum junction temperature, T_J		150	
	Storage temperature, T_{stg}	–65	150	

(1) Stresses beyond those listed under *Absolute Maximum Ratings* may cause permanent damage to the device. These are stress ratings only, which do not imply functional operation of the device at these or any other conditions beyond those indicated under *Recommended Operating Conditions*. Exposure to absolute-maximum-rated conditions for extended periods may affect device reliability.
(2) All voltage values, except differential voltages, are with respect to GND.

7.2 Recommended Operating Conditions

over operating free-air temperature range (unless otherwise noted).

		MIN	MAX	UNIT
Supply voltage, V_{DD}	Single supply	2.7	16	V
	Split supply	±1.35	±8	
Common-mode input voltage, V_{CM}		0	V_{DD}	V
Operating free-air temperature, T_A	I-suffix	–40	125	°C
Turnon voltage (shutdown pin voltage level), $V_{(ON)}$, relative to GND pin voltage			2	V
Turnoff (shutdown pin voltage level), $V_{(OFF)}$, relative to GND pin voltage		0.8		V

Copyright © 2001–2016, Texas Instruments Incorporated

7.3 Thermal Information: TLV2370

THERMAL METRIC[1]		TLV2370			UNIT
		DBV (SOT-23)	D (SOIC)	P (PDIP)	
		6 PINS	8 PINS	8 PINS	
$R_{\theta JA}$	Junction-to-ambient thermal resistance	228.5	138.4	49.2	°C/W
$R_{\theta JC(top)}$	Junction-to-case (top) thermal resistance	99.1	89.5	39.4	°C/W
$R_{\theta JB}$	Junction-to-board thermal resistance	54.6	78.6	26.4	°C/W
ψ_{JT}	Junction-to-top characterization parameter	7.7	29.9	15.4	°C/W
ψ_{JB}	Junction-to-board characterization parameter	53.8	78.1	26.3	°C/W
$R_{\theta JC(bot)}$	Junction-to-case (bottom) thermal resistance	n/a	n/a	n/a	°C/W

(1) For more information about traditional and new thermal metrics, see the *Semiconductor and IC Package Thermal Metrics* application report.

7.4 Thermal Information: TLV2371

THERMAL METRIC[1]		TLV2371			UNIT
		DBV (SOT-23)	D (SOIC)	P (PDIP)	
		5 PINS	8 PINS	8 PINS	
$R_{\theta JA}$	Junction-to-ambient thermal resistance	228.5	138.4	49.2	°C/W
$R_{\theta JC(top)}$	Junction-to-case (top) thermal resistance	99.1	89.5	39.4	°C/W
$R_{\theta JB}$	Junction-to-board thermal resistance	54.6	78.6	26.4	°C/W
ψ_{JT}	Junction-to-top characterization parameter	7.7	29.9	15.4	°C/W
ψ_{JB}	Junction-to-board characterization parameter	53.8	78.1	26.3	°C/W
$R_{\theta JC(bot)}$	Junction-to-case (bottom) thermal resistance	n/a	n/a	n/a	°C/W

(1) For more information about traditional and new thermal metrics, see the *Semiconductor and IC Package Thermal Metrics* application report.

7.5 Thermal Information: TLV2372

THERMAL METRIC[1]		TLV2372			UNIT
		D (SOIC)	DGK (VSSOP)	P (PDIP)	
		8 PINS	8 PINS	8 PINS	
$R_{\theta JA}$	Junction-to-ambient thermal resistance	138.4	191.2	49.2	°C/W
$R_{\theta JC(top)}$	Junction-to-case (top) thermal resistance	89.5	61.9	39.4	°C/W
$R_{\theta JB}$	Junction-to-board thermal resistance	78.6	111.9	26.4	°C/W
ψ_{JT}	Junction-to-top characterization parameter	29.9	5.1	15.4	°C/W
ψ_{JB}	Junction-to-board characterization parameter	78.1	110.2	26.3	°C/W
$R_{\theta JC(bot)}$	Junction-to-case (bottom) thermal resistance	n/a	n/a	n/a	°C/W

(1) For more information about traditional and new thermal metrics, see the *Semiconductor and IC Package Thermal Metrics* application report.

Copyright © 2001–2016, Texas Instruments Incorporated

7.6 Thermal Information: TLV2373

THERMAL METRIC[1]		TLV2373			UNIT
		DGS (VSSOP)	D (SOIC)	P (PDIP)	
		10 PINS	14 PINS	14 PINS	
$R_{\theta JA}$	Junction-to-ambient thermal resistance	166.5	67	66.3	°C/W
$R_{\theta JC(top)}$	Junction-to-case (top) thermal resistance	41.8	24.1	20.5	°C/W
$R_{\theta JB}$	Junction-to-board thermal resistance	86.1	22.5	26.8	°C/W
ψ_{JT}	Junction-to-top characterization parameter	1.5	2.2	2.1	°C/W
ψ_{JB}	Junction-to-board characterization parameter	84.7	22.1	26.2	°C/W
$R_{\theta JC(bot)}$	Junction-to-case (bottom) thermal resistance	n/a	n/a	n/a	°C/W

(1) For more information about traditional and new thermal metrics, see the *Semiconductor and IC Package Thermal Metrics* application report.

7.7 Thermal Information: TLV2374

THERMAL METRIC[1]		TLV2374			UNIT
		D (SOIC)	N (PDIP)	PW (TSSOP)	
		14 PINS	14 PINS	14 PINS	
$R_{\theta JA}$	Junction-to-ambient thermal resistance	67	66.3	121	°C/W
$R_{\theta JC(top)}$	Junction-to-case (top) thermal resistance	24.1	20.5	49.4	°C/W
$R_{\theta JB}$	Junction-to-board thermal resistance	22.5	26.8	62.8	°C/W
ψ_{JT}	Junction-to-top characterization parameter	2.2	2.1	5.9	°C/W
ψ_{JB}	Junction-to-board characterization parameter	22.1	26.2	62.2	°C/W
$R_{\theta JC(bot)}$	Junction-to-case (bottom) thermal resistance	n/a	n/a	n/a	°C/W

(1) For more information about traditional and new thermal metrics, see the *Semiconductor and IC Package Thermal Metrics* application report.

7.8 Thermal Information: TLV2375

THERMAL METRIC[1]		TLV2375			UNIT
		D (SOIC)	N (PDIP)	PW (TSSOP)	
		16 PINS	16 PINS	16 PINS	
$R_{\theta JA}$	Junction-to-ambient thermal resistance	83	55.8	115.6	°C/W
$R_{\theta JC(top)}$	Junction-to-case (top) thermal resistance	44	43.1	50.5	°C/W
$R_{\theta JB}$	Junction-to-board thermal resistance	40.5	35.8	60.7	°C/W
ψ_{JT}	Junction-to-top characterization parameter	11.5	27.9	7.4	°C/W
ψ_{JB}	Junction-to-board characterization parameter	40.2	35.7	60.1	°C/W
$R_{\theta JC(bot)}$	Junction-to-case (bottom) thermal resistance	n/a	n/a	n/a	°C/W

(1) For more information about traditional and new thermal metrics, see the *Semiconductor and IC Package Thermal Metrics* application report.

Copyright © 2001–2016, Texas Instruments Incorporated

7.9 Electrical Characteristics

at T_A = 25°C, V_{DD} = 2.7 V, 5 V, and 15 V (unless otherwise noted).

PARAMETER		TEST CONDITIONS		MIN	TYP	MAX	UNIT
DC PERFORMANCE							
V_{OS}	Input offset voltage	At T_A = 25°C, V_{IC} = V_{DD}/2, V_O = V_{DD}/2, R_S = 50 Ω			2	4.5	mV
		At T_A = –40°C to +125°C, V_{IC} = V_{DD}/2, V_O = V_{DD}/2, R_S = 50 Ω				6	mV
dV_{OS}/dT	Offset voltage drift	At T_A = 25°C, V_{IC} = V_{DD}/2, V_O = V_{DD}/2, R_S = 50 Ω			2		µV/°C
CMRR	Common-mode rejection ratio	V_{DD} = 2.7 V, R_S = 50 Ω	V_{IC} = 0 to V_{DD}	50	68		dB
			At T_A = –40°C to +125°C, V_{IC} = 0 to V_{DD}	49			
			V_{IC} = 0 to V_{DD} – 1.35 V	56	70		
			At T_A = –40°C to +125°C, V_{IC} = 0 to V_{DD} – 1.35 V	54			
		V_{DD} = 5 V, R_S = 50 Ω	V_{IC} = 0 to V_{DD}	55	72		
			At T_A = –40°C to +125°C, V_{IC} = 0 to V_{DD}	54			
			V_{IC} = 0 to V_{DD} – 1.35 V	67	80		
			At T_A = –40°C to +125°C, V_{IC} = 0 to V_{DD} – 1.35 V	64			
		V_{DD} = 15 V, R_S = 50 Ω	V_{IC} = 0 to V_{DD}	64	82		
			At T_A = –40°C to +125°C, V_{IC} = 0 to V_{DD}	63			
			V_{IC} = 0 to V_{DD} – 1.35 V	67	84		
			At T_A = –40°C to +125°C, V_{IC} = 0 to V_{DD} – 1.35 V	66			
A_{VD}	Large-signal differential voltage amplification	V_{DD} = 2.7 V, $V_{O(PP)}$ = V_{DD}/2, R_L = 10 kΩ		98	106		dB
			At T_A = –40°C to +125°C	76			
		V_{DD} = 5 V, $V_{O(PP)}$ = V_{DD}/2, R_L = 10 kΩ		100	110		
			At T_A = –40°C to +125°C	86			
		V_{DD} = 15 V, $V_{O(PP)}$ = V_{DD}/2, R_L = 10 kΩ		81	83		
			At T_A = –40°C to +125°C	79			
INPUT CHARACTERISTICS							
I_{OS}	Input offset current	V_{DD} = 15 V, V_{IC} = V_O = V_{DD}/2			1	60	pA
			At T_A = 70°C			100	
			At T_A = 125°C			1000	
I_B	Input bias current	V_{DD} = 15 V, V_{IC} = V_O = V_{DD}/2			1	60	pA
			At T_A = 70°C			100	
			At T_A = 125°C			1000	
	Differential input resistance				1000		GΩ
	Common-mode input capacitance	f = 21 kHz			8		pF

Electrical Characteristics (continued)

at T_A = 25°C, V_{DD} = 2.7 V, 5 V, and 15 V (unless otherwise noted).

PARAMETER		TEST CONDITIONS		MIN	TYP	MAX	UNIT
OUTPUT CHARACTERISTICS							
V_{OH}	High-level output voltage	V_{DD} = 2.7 V	At T_A = 25°C, V_{IC} = V_{DD}/2, I_{OH} = −1 mA	2.55	2.58		V
			At T_A = –40°C to +125°C, V_{IC} = V_{DD}/2, I_{OH} = −1 mA	2.48			
		V_{DD} = 5 V	At T_A = 25°C, V_{IC} = V_{DD}/2, I_{OH} = −1 mA	4.9	4.93		
			At T_A = –40°C to +125°C, V_{IC} = V_{DD}/2, I_{OH} = −1 mA	4.85			
		V_{DD} = 15 V	At T_A = 25°C, V_{IC} = V_{DD}/2, I_{OH} = −1 mA	14.92	14.96		
			At T_A = –40°C to +125°C, V_{IC} = V_{DD}/2, I_{OH} = −1 mA	14.9			
		V_{DD} = 2.7 V	At T_A = 25°C, V_{IC} = V_{DD}/2, I_{OH} = −5 mA	1.9	2		
			At T_A = –40°C to +125°C, V_{IC} = V_{DD}/2, I_{OH} = −5 mA	1.6			
		V_{DD} = 5 V	At T_A = 25°C, V_{IC} = V_{DD}/2, I_{OH} = −5 mA	4.6	4.68		
			At T_A = –40°C to +125°C, V_{IC} = V_{DD}/2, I_{OH} = −5 mA	4.5			
		V_{DD} = 15 V	At T_A = 25°C, V_{IC} = V_{DD}/2, I_{OH} = −5 mA	14.7	14.8		
			At T_A = –40°C to +125°C, V_{IC} = V_{DD}/2, I_{OH} = −5 mA	14.6			
V_{OL}	Low-level output voltage	V_{DD} = 2.7 V	At T_A = 25°C, V_{IC} = V_{DD}/2, I_{OL} = 1 mA		0.1	0.15	V
			At T_A = –40°C to +125°C, V_{IC} = V_{DD}/2, I_{OL} = 1 mA			0.22	
		V_{DD} = 5 V	At T_A = 25°C, V_{IC} = V_{DD}/2, I_{OL} = 1 mA		0.05	0.1	
			At T_A = –40°C to +125°C, V_{IC} = V_{DD}/2, I_{OL} = 1 mA			0.15	
		V_{DD} = 15 V	At T_A = 25°C, V_{IC} = V_{DD}/2, I_{OL} = 1 mA		0.05	0.08	
			At T_A = –40°C to +125°C, V_{IC} = V_{DD}/2, I_{OL} = 1 mA			0.1	
		V_{DD} = 2.7 V	At T_A = 25°C, V_{IC} = V_{DD}/2, I_{OL} = 5 mA		0.52	0.7	
			At T_A = –40°C to +125°C, V_{IC} = V_{DD}/2, I_{OL} = 5 mA			1.1	
		V_{DD} = 5 V	At T_A = 25°C, V_{IC} = V_{DD}/2, I_{OL} = 5 mA		0.28	0.4	
			At T_A = –40°C to +125°C, V_{IC} = V_{DD}/2, I_{OL} = 5 mA			0.5	
		V_{DD} = 15 V	At T_A = 25°C, V_{IC} = V_{DD}/2, I_{OL} = 5 mA		0.19	0.3	
			At T_A = –40°C to +125°C, V_{IC} = V_{DD}/2, I_{OL} = 5 mA			0.35	
I_O	Output current	V_{DD} = 2.7 V, V_O = 0.5 V from rail	Positive rail		4		mA
			Negative rail		5		
		V_{DD} = 5 V, V_O = 0.5 V from rail	Positive rail		7		
			Negative rail		8		
		V_{DD} = 15 V, V_O = 0.5 V from rail	Positive rail		16		
			Negative rail		15		

Copyright © 2001–2016, Texas Instruments Incorporated

Electrical Characteristics (continued)

at T_A = 25°C, V_{DD} = 2.7 V, 5 V, and 15 V (unless otherwise noted).

PARAMETER		TEST CONDITIONS		MIN	TYP	MAX	UNIT
POWER SUPPLY							
I_{DD}	Supply current (per channel)	V_{DD} = 2.7 V, V_O = V_{DD}/2			470	560	µA
		V_{DD} = 5 V, V_O = V_{DD}/2			550	660	
		V_{DD} = 15 V, V_O = V_{DD}/2	At T_A = 25°C		750	900	
			At T_A = –40°C to +125°C			1200	
PSRR	Power-supply rejection ratio ($\Delta V_{DD}/\Delta V_{IO}$)	V_{DD} = 2.7 V to 15 V, V_{IC} = V_{DD}/2, no load	At T_A = 25°C	70	80		dB
			At T_A = –40°C to +125°C	65			
DYNAMIC PERFORMANCE							
UGBW	Unity gain bandwidth	V_{DD} = 2.7 V	R_L = 2 kΩ, C_L = 10 pF		2.4		MHz
		V_{DD} = 5 V to 15 V	R_L = 2 kΩ, C_L = 10 pF		3		
SR	Slew rate at unity gain	V_{DD} = 2.7 V	At T_A = 25°C, $V_{O(PP)}$ = V_{DD}/2, C_L = 50 pF, R_L = 10 kΩ	1.4	2		V/µs
			At T_A = –40°C to +125°C, $V_{O(PP)}$ = V_{DD}/2, C_L = 50 pF, R_L = 10 kΩ	1			
		V_{DD} = 5 V	At T_A = 25°C, $V_{O(PP)}$ = V_{DD}/2, C_L = 50 pF, R_L = 10 kΩ	1.6	2.4		
			At T_A = –40°C to +125°C, $V_{O(PP)}$ = V_{DD}/2, C_L = 50 pF, R_L = 10 kΩ	1.2			
		V_{DD} = 15 V	At T_A = 25°C, $V_{O(PP)}$ = V_{DD}/2, C_L = 50 pF, R_L = 10 kΩ	1.9	2.1		
			At T_A = –40°C to +125°C, $V_{O(PP)}$ = V_{DD}/2, C_L = 50 pF, R_L = 10 kΩ	1.4			
φm	Phase margin	R_L = 2 kΩ, C_L = 100 pF			65		°
	Gain margin	R_L = 2 kΩ, C_L = 10 pF			18		dB
t_s	Settling time	V_{DD} = 2.7 V, $V_{(STEP)PP}$ = 1 V, A_V = −1, C_L = 10 pF, R_L = 2 kΩ, 0.1%			2.9		µs
		V_{DD} = 5 V, 15 V, $V_{(STEP)PP}$ = 1 V, A_V = −1, C_L = 47 pF, R_L = 2 kΩ, 0.1%			2		

Copyright © 2001–2016, Texas Instruments Incorporated

Electrical Characteristics (continued)

at T_A = 25°C, V_{DD} = 2.7 V, 5 V, and 15 V (unless otherwise noted).

PARAMETER		TEST CONDITIONS		MIN	TYP	MAX	UNIT
NOISE, DISTORTION PERFORMANCE							
THD + N	Total harmonic distortion plus noise	V_{DD} = 2.7 V	$V_{O(PP)}$= V_{DD}/2 V, R_L = 2 kΩ, f = 10 kHz, A_V = 1		0.02%		
			$V_{O(PP)}$= V_{DD}/2 V, R_L = 2 kΩ, f = 10 kHz, A_V = 10		0.05%		
			$V_{O(PP)}$= V_{DD}/2 V, R_L = 2 kΩ, f = 10 kHz, A_V = 100		0.18%		
		V_{DD} = 5 V, 15 V	$V_{O(PP)}$= V_{DD}/2 V, R_L = 2 kΩ, f = 10 kHz, A_V = 1		0.02%		
			$V_{O(PP)}$= V_{DD}/2 V, R_L = 2 kΩ, f = 10 kHz, A_V = 10		0.09%		
			$V_{O(PP)}$= V_{DD}/2 V, R_L = 2 kΩ, f = 10 kHz, A_V = 100		0.5%		
V_n	Equivalent input noise voltage	f = 1 kHz			39		nV/√Hz
		f = 10 kHz			35		
I_n	Equivalent input noise current	f = 1 kHz			0.6		fA/√Hz
SHUTDOWN CHARACTERISTICS							
$I_{DD(SHDN)}$	Supply current in shutdown mode (TLV2370, TLV2373, TLV2375) (per channel)	V_{DD} = 2.7 V, 5 V, $\overline{SHDN}$ = 0 V	At T_A = 25°C		25	30	µA
			At T_A = –40°C to +125°C			35	
		V_{DD} = 15 V, $\overline{SHDN}$ = 0 V	At T_A = 25°C		40	45	
			At T_A = –40°C to +125°C			50	
$t_{(on)}$	Amplifier turnon time(1)	R_L = 2 kΩ			0.8		µs
$t_{(off)}$	Amplifier turnoff time(1)	R_L = 2 kΩ			1		µs

(1) Disable time and enable time are defined as the interval between application of the logic signal to the SHDN terminal and the point at which the supply current has reached one half of its final value.

Copyright © 2001–2016, Texas Instruments Incorporated

7.10 Typical Characteristics

Table 3. Table of Graphs

			FIGURE
V_{IO}	Input offset voltage	vs Common-mode input voltage	Figure 2, Figure 3, Figure 4
CMRR	Common-mode rejection ratio	vs Frequency	Figure 5
	Input bias and offset current	vs Free-air temperature	Figure 6
V_{OL}	Low-level output voltage	vs Low-level output current	Figure 7, Figure 9, Figure 11
V_{OH}	High-level output voltage	vs High-level output current	Figure 8, Figure 10, Figure 12
$V_{O(PP)}$	Peak-to-peak output voltage	vs Frequency	Figure 13
I_{DD}	Supply current	vs Supply voltage	Figure 14
PSRR	Power supply rejection ratio	vs Frequency	Figure 15
A_{VD}	Differential voltage gain and phase	vs Frequency	Figure 16
	Gain-bandwidth product	vs Free-air temperature	Figure 17
SR	Slew rate	vs Supply voltage	Figure 18
		vs Free-air temperature	Figure 19
φm	Phase margin	vs Capacitive load	Figure 20
V_n	Equivalent input noise voltage	vs Frequency	Figure 21
	Voltage-follower large-signal pulse response		Figure 22, Figure 23
	Voltage-follower small-signal pulse response		Figure 24
	Inverting large-signal response		Figure 25, Figure 26
	Inverting small-signal response		Figure 27
	Crosstalk	vs Frequency	Figure 28
	Shutdown forward & reverse isolation	vs Frequency	Figure 29
$I_{DD(SHDN)}$	Shutdown supply current	vs Supply voltage	Figure 30
$I_{DD(SHDN)}$	Shutdown pin leakage current	vs Shutdown pin voltage	Figure 31
$I_{DD(SHDN)}$	Shutdown supply current, output voltage	vs Time	Figure 32, Figure 33

Copyright © 2001–2016, Texas Instruments Incorporated

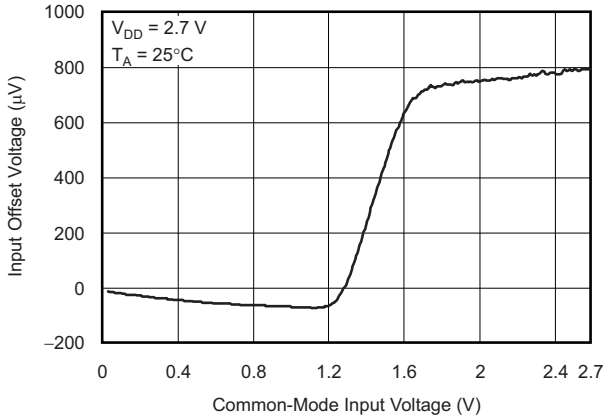

Figure 2. Input Offset Voltage vs Common-Mode Input Voltage

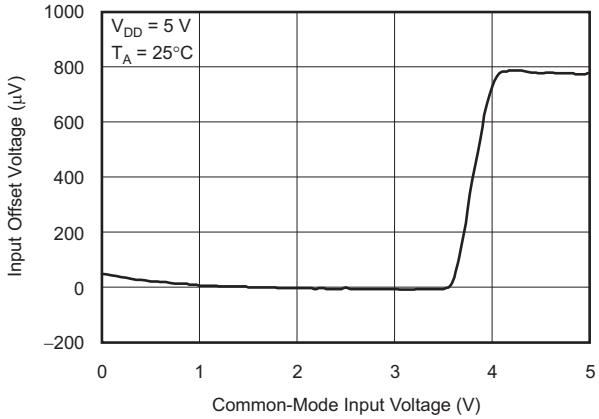

Figure 3. Input Offset Voltage vs Common-Mode Input Voltage

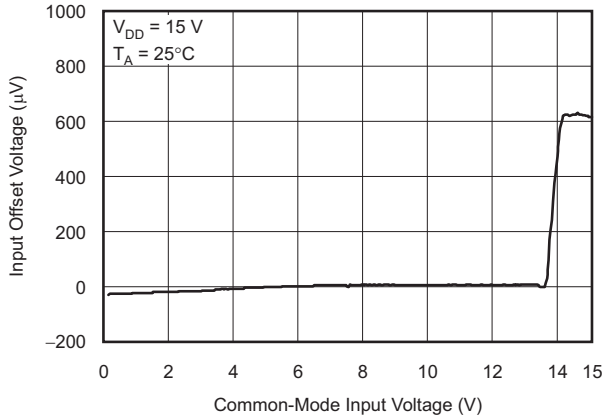

Figure 4. Input Offset Voltage vs Common-Mode Input Voltage

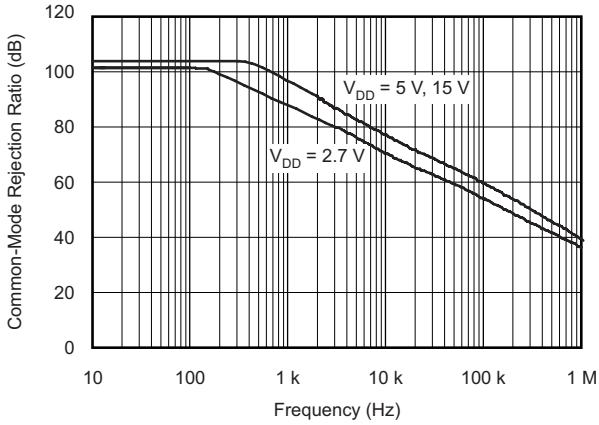

Figure 5. Common-Mode Rejection Ratio vs Frequency

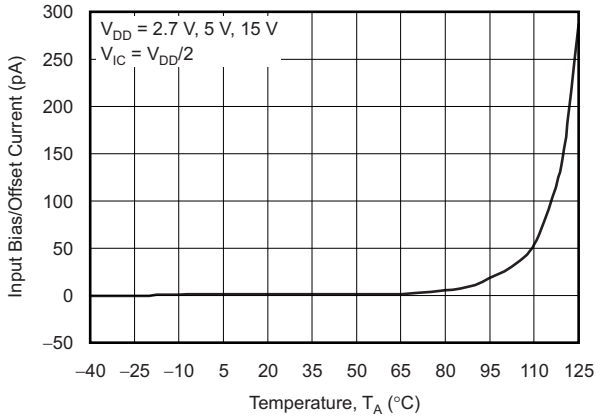

Figure 6. Input Bias or Offset Current vs Free-Air Temperature

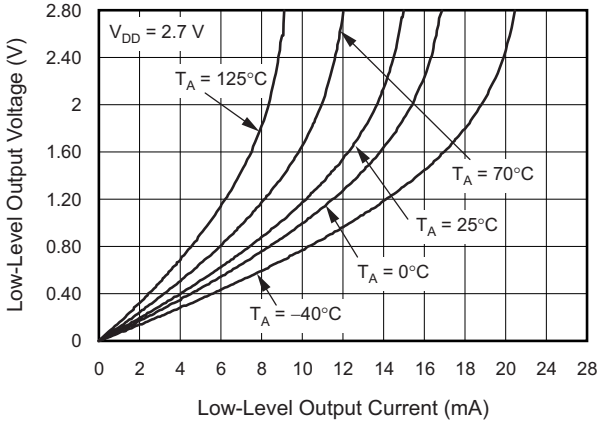

Figure 7. Low-Level Output Voltage vs Low-Level Output Current

Copyright © 2001–2016, Texas Instruments Incorporated

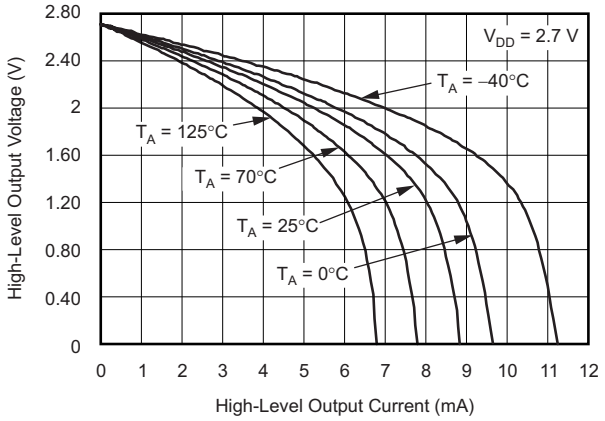

Figure 8. High-Level Output Voltage vs High-Level Output Current

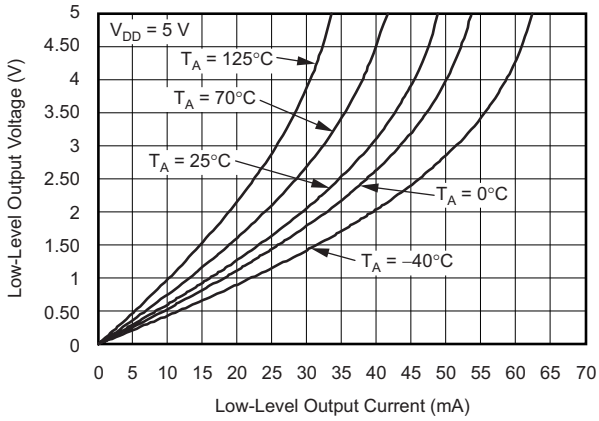

Figure 9. Low-Level Output Voltage vs Low-Level Output Current

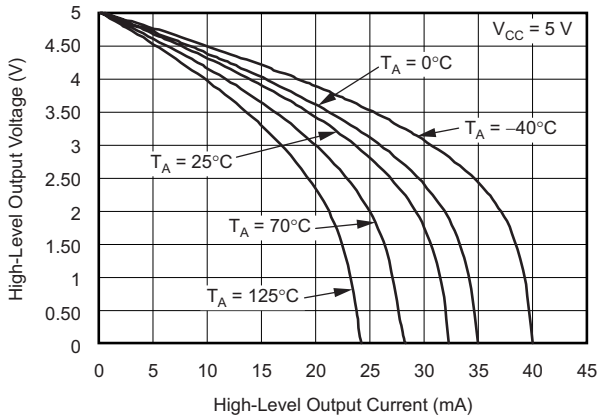

Figure 10. High-Level Output Voltage vs High-Level Output Current

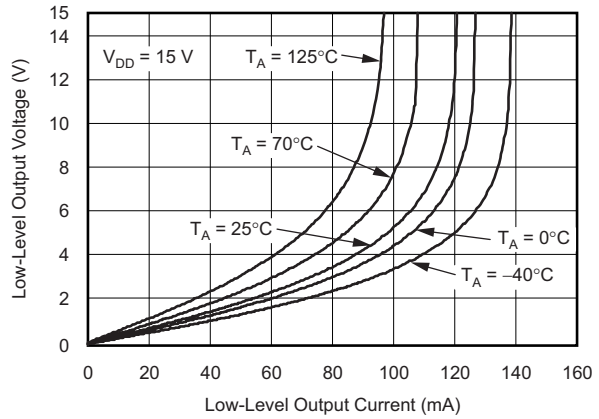

Figure 11. Low-Level Output Voltage vs Low-Level Output Current

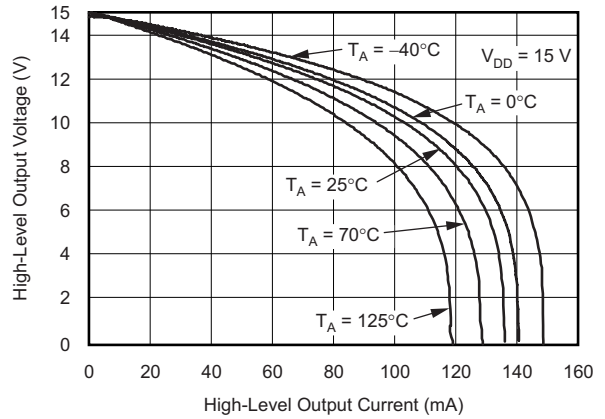

Figure 12. High-Level Output Voltage vs High-Level Output Current

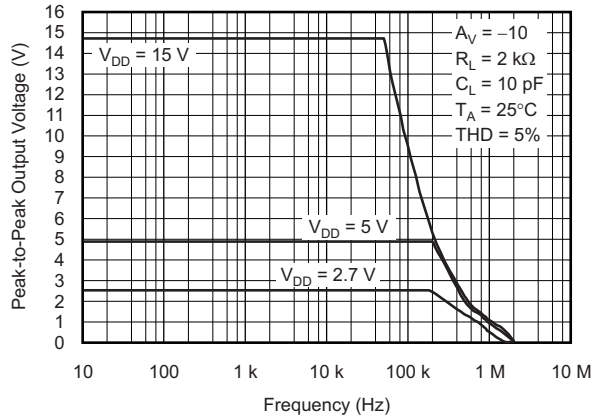

Figure 13. Peak-to-Peak Output Voltage vs Frequency

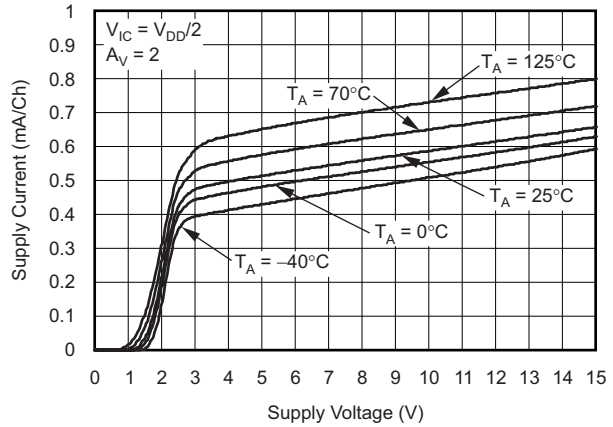

Figure 14. Supply Current vs Supply Voltage

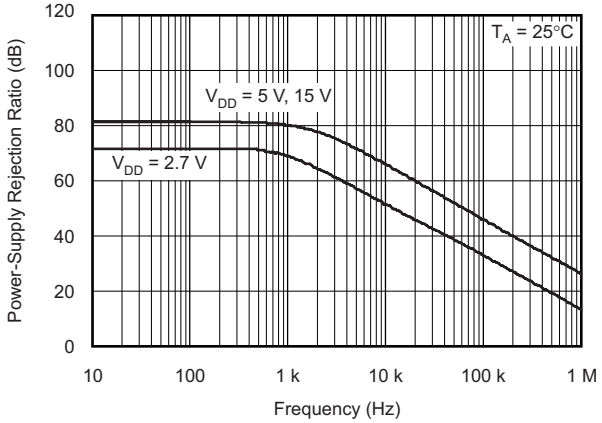

Figure 15. Power Supply Rejection Ratio vs Frequency

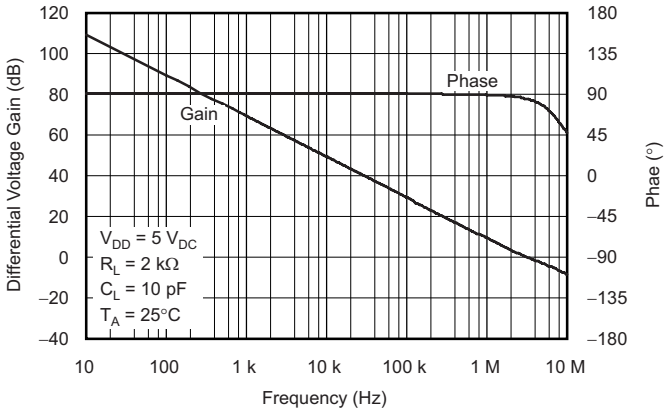

Figure 16. Differential Voltage Gain and Phase vs Frequency

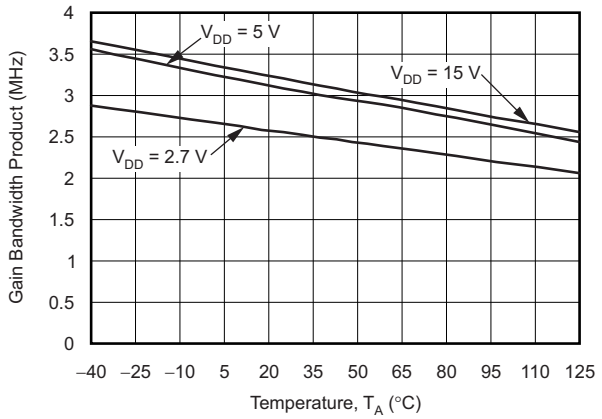

Figure 17. Gain Bandwidth Product vs Free-Air Temperature

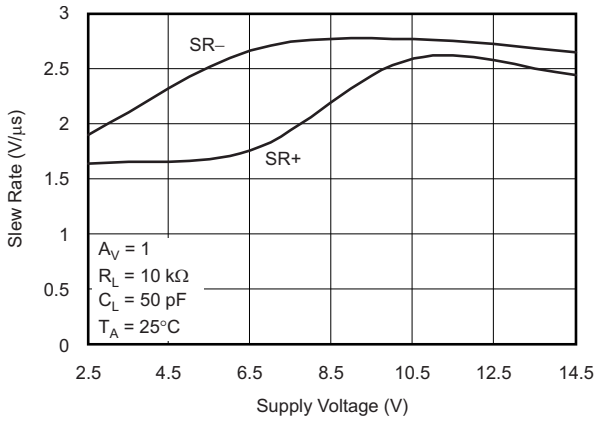

Figure 18. Slew Rate vs Supply Voltage

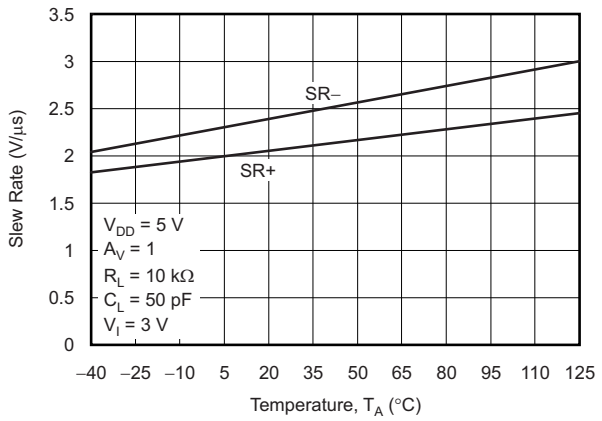

Figure 19. Slew Rate vs Free-Air Temperature

Copyright © 2001–2016, Texas Instruments Incorporated

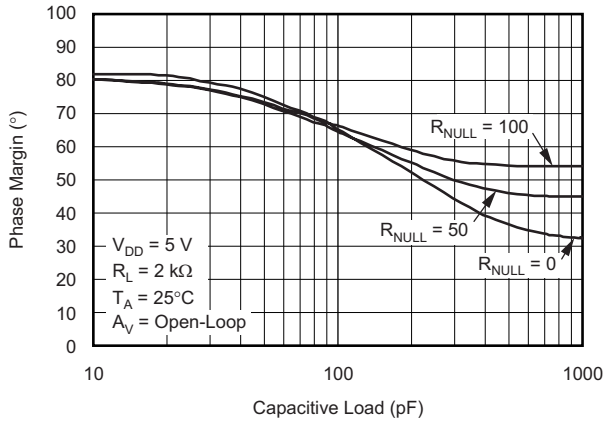

Figure 20. Phase Margin vs Capacitive Load

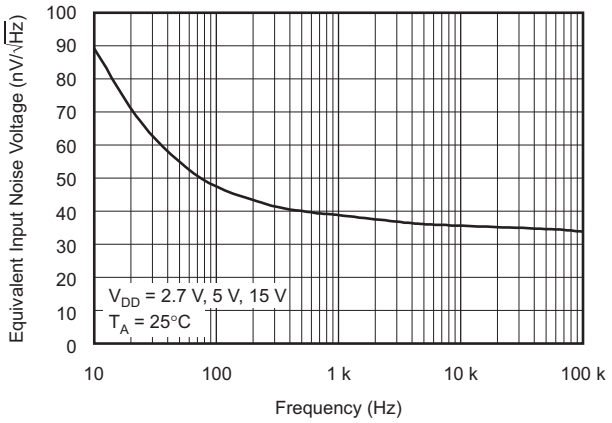

Figure 21. Equivalent Input Noise Voltage vs Frequency

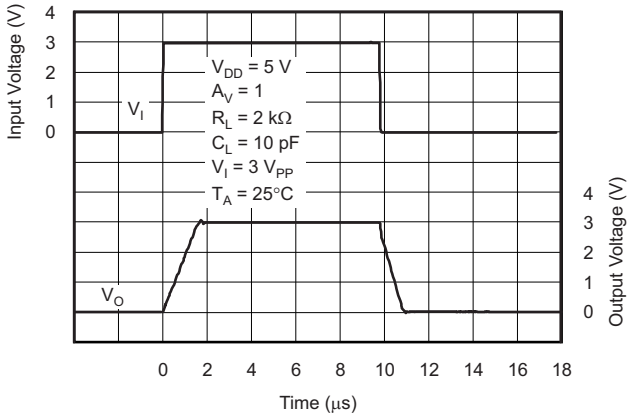

Figure 22. Voltage-Follower Large-Signal Pulse Response

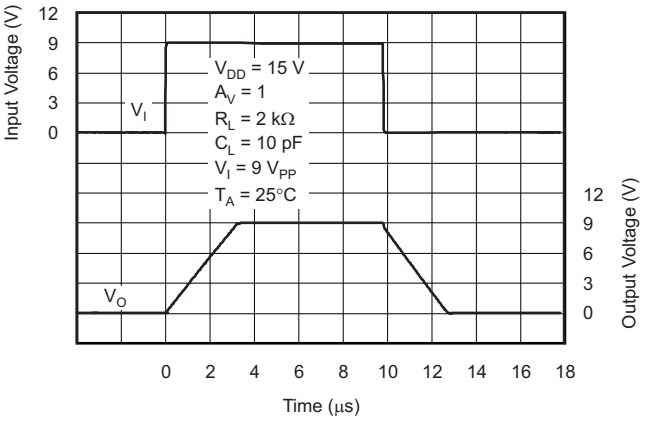

Figure 23. Voltage-Follower Large-Signal Pulse Response

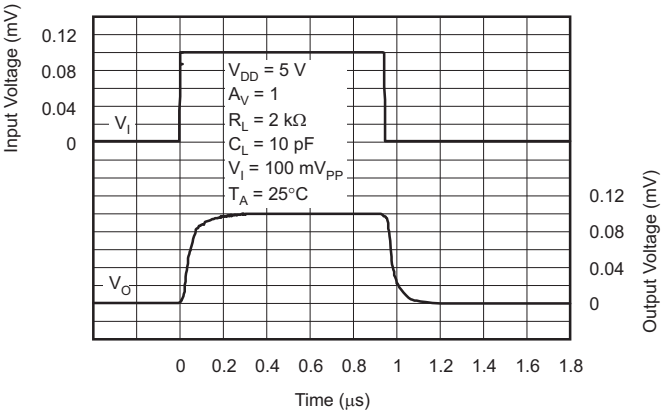

Figure 24. Voltage-Follower Small-Signal Pulse Response

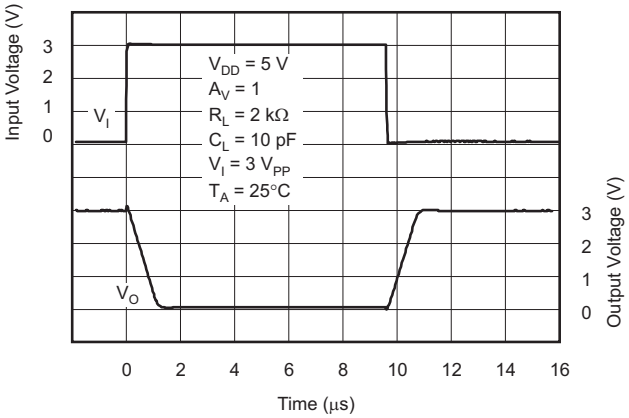

Figure 25. Inverting Large-Signal Response

Copyright © 2001–2016, Texas Instruments Incorporated

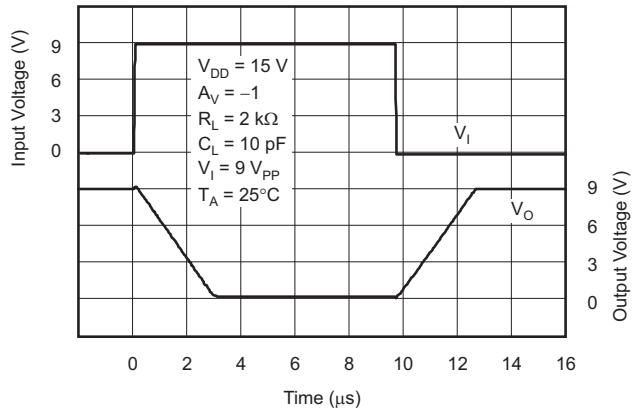

Figure 26. Inverting Large-Signal Response

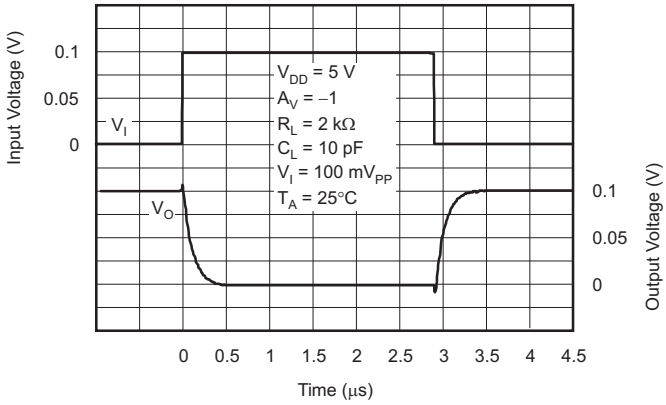

Figure 27. Inverting Small-Signal Response

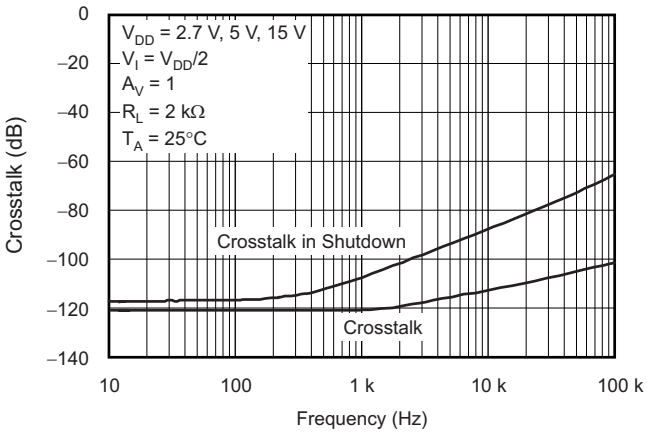

Figure 28. Crosstalk vs Frequency

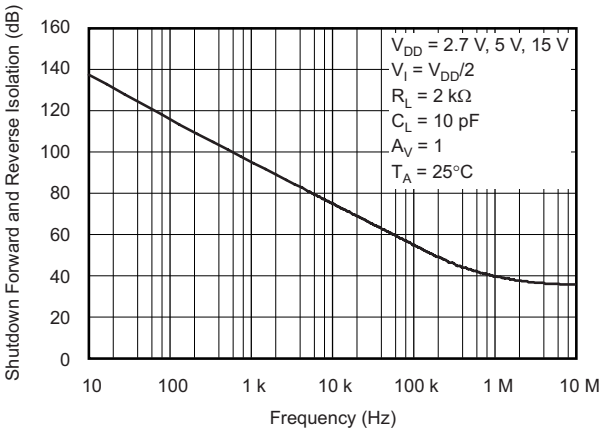

Figure 29. Shutdown Forward and Reverse Isolation vs Frequency

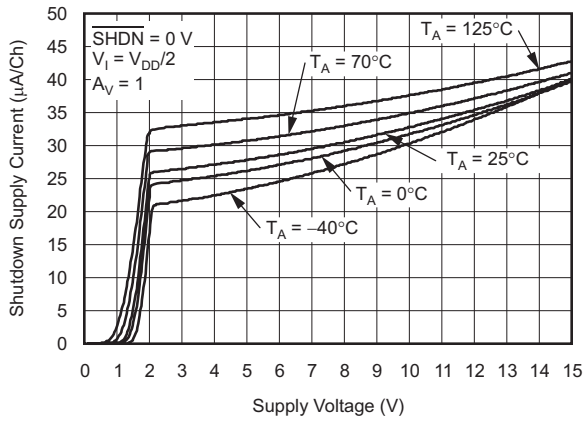

Figure 30. Shutdown Supply Current vs Supply Voltage

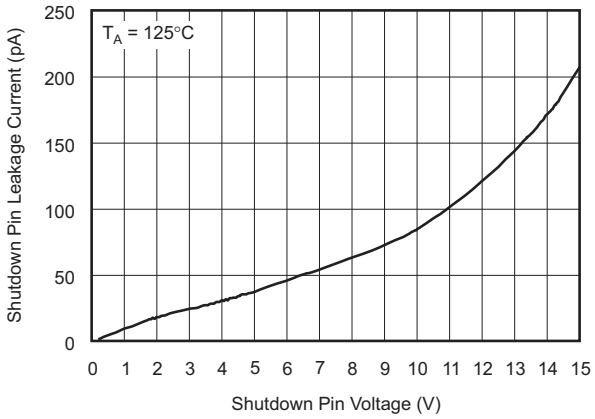

Figure 31. Shutdown Pin Leakage Current vs Shutdown Pin Voltage

Copyright © 2001–2016, Texas Instruments Incorporated

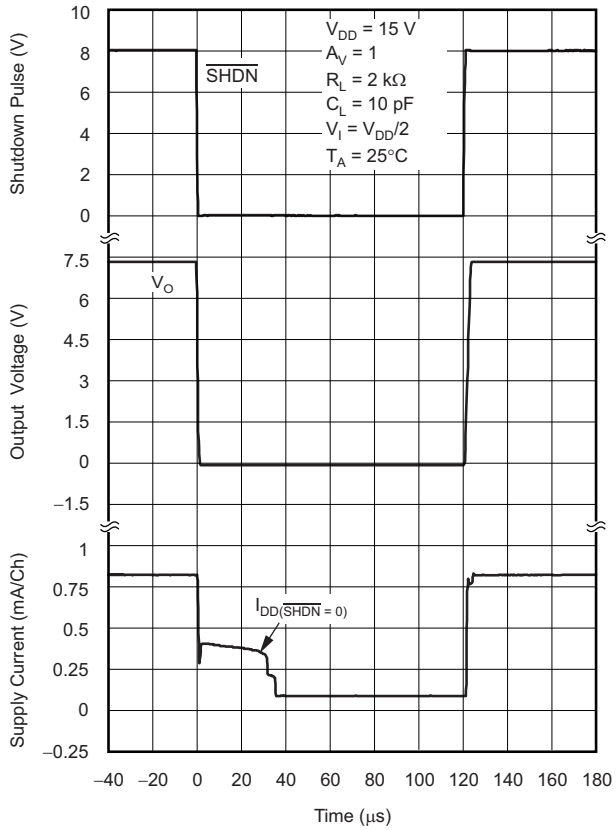

Figure 32. Shutdown Supply Current and Output Voltage vs Time

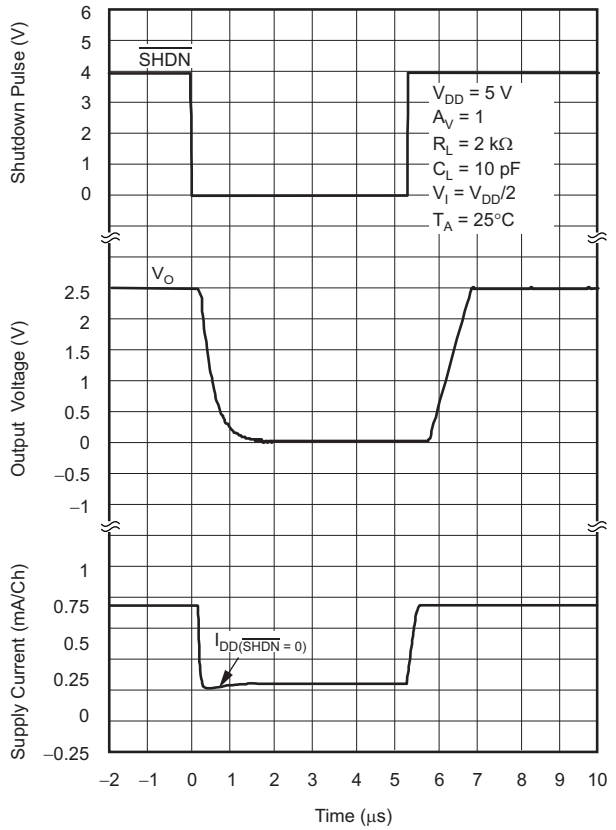

Figure 33. Shutdown Supply Current/output Voltage vs Time

8 Detailed Description

8.1 Overview

The TLV237x single-supply CMOS operational amplifiers provide rail-to-rail input and output capability with 3-MHz bandwidth. Consuming only 550 μA the TLV237x is the perfect choice for portable and battery-operated applications. The maximum recommended supply voltage is 16 V, which allows the devices to be operated from (±8-V supplies down to ±1.35 V) a variety of rechargeable cells. The rail-to-rail inputs with high input impedance make the TLV237x ideal for sensor signal-conditioning applications.

8.2 Functional Block Diagram

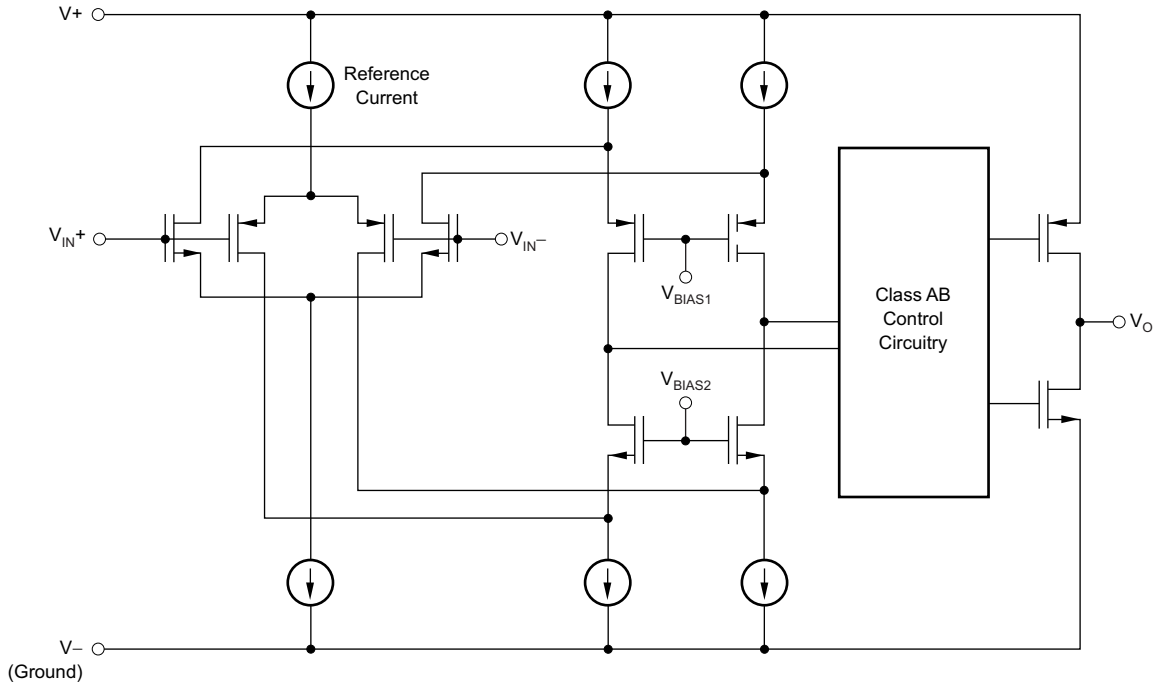

Copyright © 2016, Texas Instruments Incorporated

8.3 Feature Description

8.3.1 Rail-to-Rail Input Operation

The TLV237x input stage consists of two differential transistor pairs, NMOS and PMOS, that operate together to achieve rail-to-rail input operation. The transition point between these two pairs can be seen in Figure 2, Figure 3, and Figure 4 for a 2.7-V, 5-V, and 15-V supply. As the common-mode input voltage approaches the positive supply rail, the input pair switches from the PMOS differential pair to the NMOS differential pair. This transition occurs approximately 1.35 V from the positive rail and results in a change in offset voltage due to different device characteristics between the NMOS and PMOS pairs. If the input signal to the device is large enough to swing between both rails, this transition results in a reduction in common-mode rejection ratio (CMRR). If the input signal does not swing between both rails, it is best to bias the signal in the region where only one input pair is active. This is the region inFigure 2 through Figure 4 where the offset voltage varies slightly across the input range and optimal CMRR can be achieved. This has the greatest impact when operating from a 2.7-V supply voltage.

8.3.2 Driving a Capacitive Load

When the amplifier is configured in this manner, capacitive loading directly on the output decreases the device phase margin leading to high frequency ringing or oscillations. Therefore, for capacitive loads of greater than 10 pF, TI recommends that a resistor be placed in series (RNULL) with the output of the amplifier, as shown in Figure 34. A minimum value of 20 Ω should work well for most applications.

Copyright © 2001–2016, Texas Instruments Incorporated

Feature Description (continued)

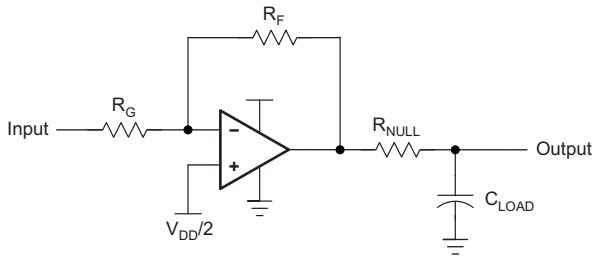

Figure 34. Driving a Capacitive Load

8.3.3 Offset Voltage

The output offset voltage, (VOO) is the sum of the input offset voltage (VIO) and both input bias currents (IIB) times the corresponding gains. Figure 35 can be used to calculate the output offset voltage:

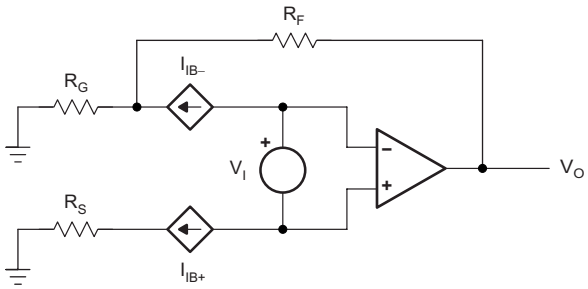

$$V_{OO} = V_{IO}\left(1 + \left(\frac{R_F}{R_G}\right)\right) \pm I_{IB+} R_S\left(1 + \left(\frac{R_F}{R_G}\right)\right) \pm I_{IB-} R_F$$

Figure 35. Output Offset Voltage Model

8.3.4 General Configurations

When receiving low-level signals, limiting the bandwidth of the incoming signals into the system is often required. The simplest way to accomplish this is to place an RC filter at the noninverting terminal of the amplifier (see Figure 36).

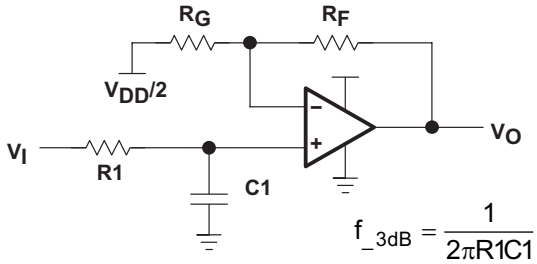

$$f_{-3dB} = \frac{1}{2\pi R1C1}$$

$$\frac{V_O}{V_I} = \left(1 + \frac{R_F}{R_G}\right)\left(\frac{1}{1 + 2\pi fR1C1}\right)$$

Figure 36. Single-Pole Low-Pass Filter

If even more attenuation is needed, a multiple pole filter is required. The Sallen-Key filter can be used for this task. For best results, the amplifier must have a bandwidth that is 8 to 10 times the filter frequency bandwidth. Failure to do this can result in phase shift of the amplifier.

Feature Description (continued)

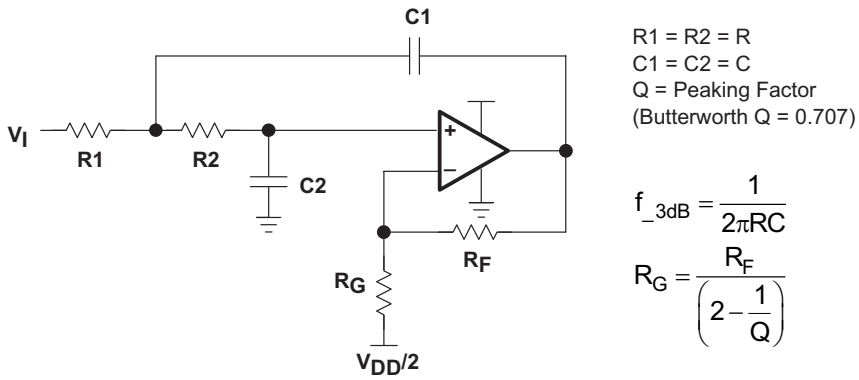

Figure 37. 2-Pole Low-Pass Sallen-Key Filter

8.3.5 Shutdown Function

Three members of the TLV237x family (TLV2370, TLV2373, and TLV2375) have a shutdown terminal for conserving battery life in portable applications. When the shutdown terminal is tied low, the supply current is reduced to 25 μA/channel, the amplifier is disabled, and the outputs are placed in a high impedance mode. To enable the amplifier, the shutdown terminal can either be left floating or pulled high. When the shutdown terminal is left floating, take care to ensure that parasitic leakage current at the shutdown terminal does not inadvertently place the operational amplifier into shutdown.

8.4 Device Functional Modes

The TLV2371, TLV2372, and TLV2374 have a single functional mode. These devices are operational as long as the power-supply voltage is between 2.7 V (±1.35 V) and 16 V (±8 V).

The TLV2370, TLV2373, and TLV2375 are likewise operational as long as the power-supply voltage is between 2.7 V (±1.35 V) and 16 V (±8 V), additionally these devices also have a shutdown capability. When the shutdown control pin is driven below 0.8 V above ground, the device is in shutdown. If the shutdown control pin voltage is driven to greater than 2 V above ground, the device is in its normal operating mode. See *Shutdown Function* for additional information regarding shutdown operation.

Copyright © 2001–2016, Texas Instruments Incorporated

9 Application and Implementation

NOTE

Information in the following applications sections is not part of the TI component specification, and TI does not warrant its accuracy or completeness. TI's customers are responsible for determining suitability of components for their purposes. Customers should validate and test their design implementation to confirm system functionality.

9.1 Application Information

When designing for low power, choose system components carefully. To minimize current consumption, select large-value resistors. Any resistors can react with stray capacitance in the circuit and the input capacitance of the operational amplifier. These parasitic RC combinations can affect the stability of the overall system. Use of a feedback capacitor assures stability and limits overshoot or gain peaking.

9.2 Typical Application

A typical application for an operational amplifier is an inverting amplifier, as shown in Figure 38. An inverting amplifier takes a positive voltage on the input and outputs a signal inverted to the input, making a negative voltage of the same magnitude. In the same manner, the amplifier also makes negative input voltages positive on the output. In addition, amplification can be added by selecting the input resistor R_I and the feedback resistor R_F.

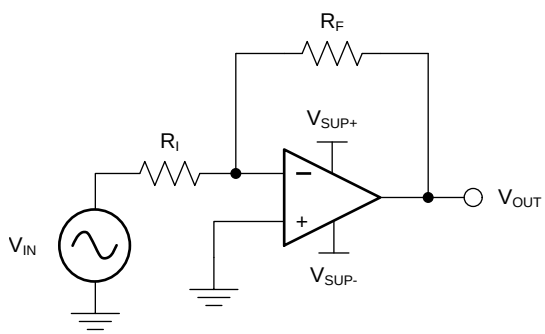

Copyright © 2016, Texas Instruments Incorporated

Figure 38. Application Schematic

9.2.1 Design Requirements

The supply voltage must be chosen to be larger than the input voltage range and the desired output range. The limits of the input common-mode range (V_{CM}) and the output voltage swing to the rails (V_O) must also be considered. For instance, this application scales a signal of ±0.5 V (1 V) to ±1.8 V (3.6 V). Setting the supply at ±2.5 V is sufficient to accommodate this application.

9.2.2 Detailed Design Procedure

Determine the gain required by the inverting amplifier using Equation 1 and Equation 2:

$$A_V = \frac{V_{OUT}}{V_{IN}} \tag{1}$$

$$A_V = \frac{1.8}{-0.5} = -3.6 \tag{2}$$

When the desired gain is determined, choose a value for R_I or R_F. Choosing a value in the kΩ range is desirable for general-purpose applications because the amplifier circuit uses currents in the milliamp range. This milliamp current range ensures the device does not draw too much current. The trade-off is that very large resistors (100s of kΩ) draw the smallest current but generate the highest noise. Very small resistors (100s of Ω) generate low noise but draw high current. This example uses 10 kΩ for R_I, meaning 36 kΩ is used for R_F. These values are determined by Equation 3:

Typical Application (continued)

$$A_V = -\frac{R_F}{R_I} \tag{3}$$

9.2.3 Application Curve

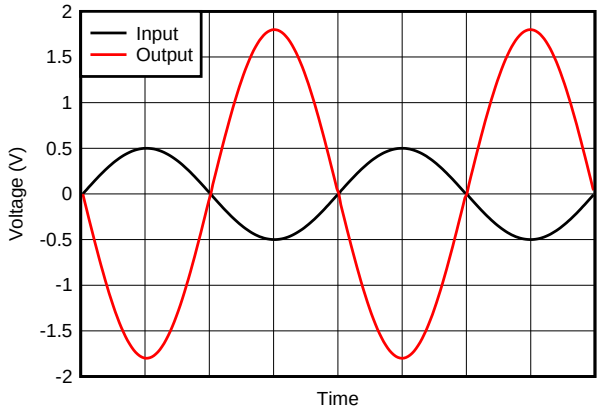

Figure 39. Inverting Amplifier Input and Output

Copyright © 2001–2016, Texas Instruments Incorporated

10 Power Supply Recommendations

The TLV237x family is specified for operation from 2.7 V to 15 V (±1.35 V to ±7.5 V); many specifications apply from –40°C to +125°C. The *Typical Characteristics* presents parameters that can exhibit significant variance with regard to operating voltage or temperature.

CAUTION

Supply voltages larger than 16 V can permanently damage the device (see the *Absolute Maximum Ratings* table).

Place 0.1-µF bypass capacitors close to the power-supply pins to reduce errors coupling in from noisy or high-impedance power supplies. For more detailed information on bypass capacitor placement; see *Layout*.

11 Layout

11.1 Layout Guidelines

To achieve the levels of high performance of the TLV237x, follow proper printed-circuit board design techniques. A general set of guidelines is given in the following.

- Ground planes—TI highly recommends using a ground plane on the board to provide all components with a low inductive ground connection. However, in the areas of the amplifier inputs and output, the ground plane can be removed to minimize the stray capacitance.
- Proper power supply decoupling—Use a 6.8-µF tantalum capacitor in parallel with a 0.1-µF ceramic capacitor on each supply terminal. It may be possible to share the tantalum among several amplifiers depending on the application, but a 0.1-µF ceramic capacitor should always be used on the supply terminal of every amplifier. In addition, the 0.1-µF capacitor must be placed as close as possible to the supply terminal. As this distance increases, the inductance in the connecting trace makes the capacitor less effective. The designer should strive for distances of less than 0.1 inches between the device power terminals and the ceramic capacitors.
- Sockets—Sockets can be used but are not recommended. The additional lead inductance in the socket pins will often lead to stability problems. Surface-mount packages soldered directly to the printed-circuit board is the best implementation.
- Short trace runs and compact part placements—Optimum high performance is achieved when stray series inductance has been minimized. To realize this, the circuit layout must be made as compact as possible, thereby minimizing the length of all trace runs. Pay particular attention to the inverting input of the amplifier. Its length must be kept as short as possible. This helps to minimize stray capacitance at the input of the amplifier.
- Surface-mount passive components—Using surface-mount passive components is recommended for high performance amplifier circuits for several reasons. First, because of the extremely low lead inductance of surface-mount components, the problem with stray series inductance is greatly reduced. Second, the small size of surface-mount components naturally leads to a more compact layout thereby minimizing both stray inductance and capacitance. If leaded components are used, TI recommends that the lead lengths be kept as short as possible.

11.2 Layout Example

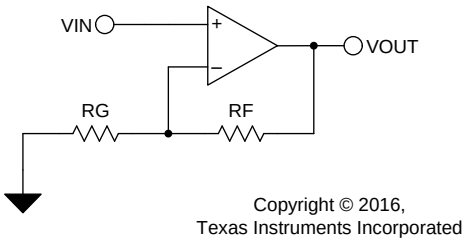

Figure 40. Schematic Representation

Layout Example (continued)

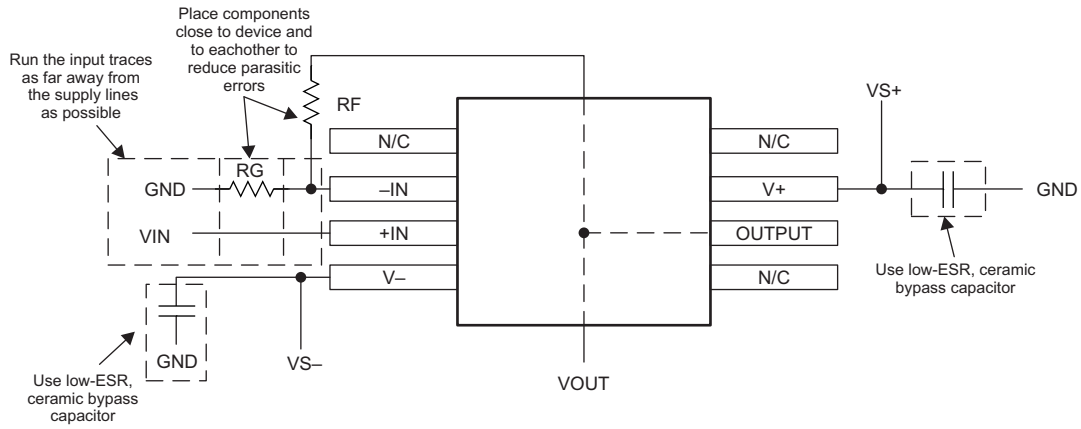

Copyright © 2016, Texas Instruments Incorporated

Figure 41. Operational Amplifier Board Layout for Noninverting Configuration

11.3 Power Dissipation Considerations

For a given θ_{JA}, the maximum power dissipation is shown in Figure 42 and is calculated by Equation 4:

$$P_D = \left(\frac{T_{MAX} - T_A}{\theta_{JA}}\right)$$

where

- P_D = Maximum power dissipation of TLV237x IC (watts)
- T_{MAX} = Absolute maximum junction temperature (150°C)
- T_A = Free-ambient air temperature (°C)
- $\theta_{JA} = \theta_{JC}$ (Thermal coefficient from junction to case) + θ_{CA} (Thermal coefficient from case to ambient air (°C/W)) (4)

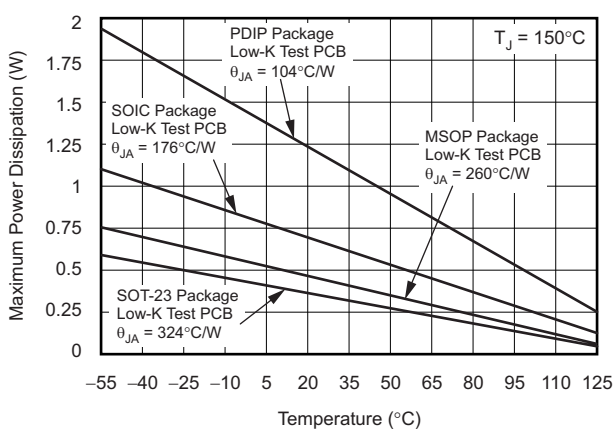

Results are with no air flow and using JEDEC Standard Low-K test PCB.

Figure 42. Maximum Power Dissipation vs Free-Air Temperature

Copyright © 2001–2016, Texas Instruments Incorporated

12 Device and Documentation Support

12.1 Documentation Support

12.1.1 Related Documentation

For related documentation see the following:

EVM Selection Guide (SLOU060)

12.2 Related Links

The table below lists quick access links. Categories include technical documents, support and community resources, tools and software, and quick access to sample or buy.

Table 4. Related Links

PARTS	PRODUCT FOLDER	SAMPLE & BUY	TECHNICAL DOCUMENTS	TOOLS & SOFTWARE	SUPPORT & COMMUNITY
TLV2370	Click here	Click here	Click here	Click here	Click here
TLV2371	Click here	Click here	Click here	Click here	Click here
TLV2372	Click here	Click here	Click here	Click here	Click here
TLV2373	Click here	Click here	Click here	Click here	Click here
TLV2374	Click here	Click here	Click here	Click here	Click here
TLV2375	Click here	Click here	Click here	Click here	Click here

12.3 Receiving Notification of Documentation Updates

To receive notification of documentation updates, navigate to the device product folder on ti.com. In the upper right corner, click on *Alert me* to register and receive a weekly digest of any product information that has changed. For change details, review the revision history included in any revised document.

12.4 Community Resources

The following links connect to TI community resources. Linked contents are provided "AS IS" by the respective contributors. They do not constitute TI specifications and do not necessarily reflect TI's views; see TI's Terms of Use.

TI E2E™ Online Community ***TI's Engineer-to-Engineer (E2E) Community.*** Created to foster collaboration among engineers. At e2e.ti.com, you can ask questions, share knowledge, explore ideas and help solve problems with fellow engineers.

Design Support ***TI's Design Support*** Quickly find helpful E2E forums along with design support tools and contact information for technical support.

12.5 Trademarks

E2E is a trademark of Texas Instruments.
All other trademarks are the property of their respective owners.

12.6 Electrostatic Discharge Caution

This integrated circuit can be damaged by ESD. Texas Instruments recommends that all integrated circuits be handled with appropriate precautions. Failure to observe proper handling and installation procedures can cause damage.

ESD damage can range from subtle performance degradation to complete device failure. Precision integrated circuits may be more susceptible to damage because very small parametric changes could cause the device not to meet its published specifications.

12.7 Glossary

SLYZ022 — *TI Glossary*.

This glossary lists and explains terms, acronyms, and definitions.

13 Mechanical, Packaging, and Orderable Information

The following pages include mechanical, packaging, and orderable information. This information is the most current data available for the designated devices. This data is subject to change without notice and revision of this document. For browser-based versions of this data sheet, refer to the left-hand navigation.

Copyright © 2001–2016, Texas Instruments Incorporated

PACKAGING INFORMATION

Orderable part number	Status (1)	Material type (2)	Package | Pins	Package qty | Carrier	RoHS (3)	Lead finish/ Ball material (4)	MSL rating/ Peak reflow (5)	Op temp (°C)	Part marking (6)
TLV2370ID	Obsolete	Production	SOIC (D) | 8	-	-	Call TI	Call TI	-40 to 125	2370I
TLV2370IDBVR	Active	Production	SOT-23 (DBV) | 6	3000 | LARGE T&R	Yes	NIPDAU	Level-1-260C-UNLIM	-40 to 125	VBFI
TLV2370IDBVR.A	Active	Production	SOT-23 (DBV) | 6	3000 | LARGE T&R	Yes	NIPDAU	Level-1-260C-UNLIM	-40 to 125	VBFI
TLV2370IDBVR.B	Active	Production	SOT-23 (DBV) | 6	3000 | LARGE T&R	Yes	NIPDAU	Level-1-260C-UNLIM	-40 to 125	VBFI
TLV2370IDBVR1G4	Active	Production	SOT-23 (DBV) | 6	3000 | LARGE T&R	Yes	NIPDAU	Level-1-260C-UNLIM	-40 to 125	VBFI
TLV2370IDBVR1G4.A	Active	Production	SOT-23 (DBV) | 6	3000 | LARGE T&R	Yes	NIPDAU	Level-1-260C-UNLIM	-40 to 125	VBFI
TLV2370IDBVR1G4.B	Active	Production	SOT-23 (DBV) | 6	3000 | LARGE T&R	Yes	NIPDAU	Level-1-260C-UNLIM	-40 to 125	VBFI
TLV2370IDBVT	Active	Production	SOT-23 (DBV) | 6	250 | SMALL T&R	Yes	NIPDAU	Level-1-260C-UNLIM	-40 to 125	VBFI
TLV2370IDBVT.A	Active	Production	SOT-23 (DBV) | 6	250 | SMALL T&R	Yes	NIPDAU	Level-1-260C-UNLIM	-40 to 125	VBFI
TLV2370IDBVT.B	Active	Production	SOT-23 (DBV) | 6	250 | SMALL T&R	Yes	NIPDAU	Level-1-260C-UNLIM	-40 to 125	VBFI
TLV2370IDR	Active	Production	SOIC (D) | 8	2500 | LARGE T&R	Yes	NIPDAU	Level-1-260C-UNLIM	-40 to 125	2370I
TLV2370IDR.B	Active	Production	SOIC (D) | 8	2500 | LARGE T&R	Yes	NIPDAU	Level-1-260C-UNLIM	-40 to 125	2370I
TLV2370IP	Active	Production	PDIP (P) | 8	50 | TUBE	Yes	NIPDAU	N/A for Pkg Type	-40 to 125	2370I
TLV2370IP.B	Active	Production	PDIP (P) | 8	50 | TUBE	Yes	NIPDAU	N/A for Pkg Type	-40 to 125	2370I
TLV2371ID	Active	Production	SOIC (D) | 8	75 | TUBE	Yes	NIPDAU	Level-1-260C-UNLIM	-40 to 125	2371I
TLV2371ID.B	Active	Production	SOIC (D) | 8	75 | TUBE	Yes	NIPDAU	Level-1-260C-UNLIM	-40 to 125	2371I
TLV2371IDBVR	Active	Production	SOT-23 (DBV) | 5	3000 | LARGE T&R	Yes	NIPDAU	Level-1-260C-UNLIM	-40 to 125	VBGI
TLV2371IDBVR.B	Active	Production	SOT-23 (DBV) | 5	3000 | LARGE T&R	Yes	NIPDAU	Level-1-260C-UNLIM	-40 to 125	VBGI
TLV2371IDBVT	Active	Production	SOT-23 (DBV) | 5	250 | SMALL T&R	Yes	NIPDAU	Level-1-260C-UNLIM	-40 to 125	VBGI
TLV2371IDBVT.B	Active	Production	SOT-23 (DBV) | 5	250 | SMALL T&R	Yes	NIPDAU	Level-1-260C-UNLIM	-40 to 125	VBGI
TLV2371IDG4	Active	Production	SOIC (D) | 8	75 | TUBE	-	Call TI	Call TI	-40 to 125	
TLV2371IDR	Active	Production	SOIC (D) | 8	2500 | LARGE T&R	Yes	NIPDAU	Level-1-260C-UNLIM	-40 to 125	2371I
TLV2371IDR.B	Active	Production	SOIC (D) | 8	2500 | LARGE T&R	Yes	NIPDAU	Level-1-260C-UNLIM	-40 to 125	2371I
TLV2371IDRG4	Active	Production	SOIC (D) | 8	2500 | LARGE T&R	-	Call TI	Call TI	-40 to 125	
TLV2371IP	Active	Production	PDIP (P) | 8	50 | TUBE	Yes	NIPDAU	N/A for Pkg Type	-40 to 125	2371I
TLV2371IP.B	Active	Production	PDIP (P) | 8	50 | TUBE	Yes	NIPDAU	N/A for Pkg Type	-40 to 125	2371I
TLV2371IPE4	Active	Production	PDIP (P) | 8	50 | TUBE	-	Call TI	Call TI	-40 to 125	
TLV2372ID	Active	Production	SOIC (D) | 8	75 | TUBE	Yes	NIPDAU	Level-1-260C-UNLIM	-40 to 125	2372I
TLV2372ID.A	Active	Production	SOIC (D) | 8	75 | TUBE	Yes	NIPDAU	Level-1-260C-UNLIM	-40 to 125	2372I

Orderable part number	Status (1)	Material type (2)	Package | Pins	Package qty | Carrier	RoHS (3)	Lead finish/ Ball material (4)	MSL rating/ Peak reflow (5)	Op temp (°C)	Part marking (6)
TLV2372ID.B	Active	Production	SOIC (D) | 8	75 | TUBE	Yes	NIPDAU	Level-1-260C-UNLIM	-40 to 125	2372I
TLV2372IDGK	Active	Production	VSSOP (DGK) | 8	80 | TUBE	Yes	NIPDAU | NIPDAUAG	Level-1-260C-UNLIM	-40 to 125	APG
TLV2372IDGK.A	Active	Production	VSSOP (DGK) | 8	80 | TUBE	Yes	NIPDAU	Level-1-260C-UNLIM	-40 to 125	APG
TLV2372IDGK.B	Active	Production	VSSOP (DGK) | 8	80 | TUBE	Yes	NIPDAU	Level-1-260C-UNLIM	-40 to 125	APG
TLV2372IDGKG4	Active	Production	VSSOP (DGK) | 8	80 | TUBE	-	Call TI	Call TI	-40 to 125	
TLV2372IDGKR	Active	Production	VSSOP (DGK) | 8	2500 | LARGE T&R	Yes	NIPDAU | NIPDAUAG	Level-1-260C-UNLIM	-40 to 125	APG
TLV2372IDGKR.A	Active	Production	VSSOP (DGK) | 8	2500 | LARGE T&R	Yes	NIPDAU	Level-1-260C-UNLIM	-40 to 125	APG
TLV2372IDGKR.B	Active	Production	VSSOP (DGK) | 8	2500 | LARGE T&R	Yes	NIPDAU	Level-1-260C-UNLIM	-40 to 125	APG
TLV2372IDR	Active	Production	SOIC (D) | 8	2500 | LARGE T&R	Yes	NIPDAU	Level-1-260C-UNLIM	-40 to 125	2372I
TLV2372IDR.A	Active	Production	SOIC (D) | 8	2500 | LARGE T&R	Yes	NIPDAU	Level-1-260C-UNLIM	-40 to 125	2372I
TLV2372IDR.B	Active	Production	SOIC (D) | 8	2500 | LARGE T&R	Yes	NIPDAU	Level-1-260C-UNLIM	-40 to 125	2372I
TLV2372IDRG4	Active	Production	SOIC (D) | 8	2500 | LARGE T&R	-	Call TI	Call TI	-40 to 125	
TLV2372IP	Active	Production	PDIP (P) | 8	50 | TUBE	Yes	NIPDAU	N/A for Pkg Type	-40 to 125	2372I
TLV2372IP.A	Active	Production	PDIP (P) | 8	50 | TUBE	Yes	NIPDAU	N/A for Pkg Type	-40 to 125	2372I
TLV2372IP.B	Active	Production	PDIP (P) | 8	50 | TUBE	Yes	NIPDAU	N/A for Pkg Type	-40 to 125	2372I
TLV2372IPE4	Active	Production	PDIP (P) | 8	50 | TUBE	-	Call TI	Call TI	-40 to 125	
TLV2373ID	Obsolete	Production	SOIC (D) | 14	-	-	Call TI	Call TI	-40 to 125	2373I
TLV2373IDGS	Active	Production	VSSOP (DGS) | 10	80 | TUBE	Yes	NIPDAU | NIPDAUAG	Level-1-260C-UNLIM	-40 to 125	API
TLV2373IDGS.A	Active	Production	VSSOP (DGS) | 10	80 | TUBE	Yes	NIPDAU	Level-1-260C-UNLIM	-40 to 125	API
TLV2373IDGS.B	Active	Production	VSSOP (DGS) | 10	80 | TUBE	Yes	NIPDAU	Level-1-260C-UNLIM	-40 to 125	API
TLV2373IDGSR	Active	Production	VSSOP (DGS) | 10	2500 | LARGE T&R	Yes	NIPDAU | NIPDAUAG	Level-1-260C-UNLIM	-40 to 125	API
TLV2373IDGSR.A	Active	Production	VSSOP (DGS) | 10	2500 | LARGE T&R	Yes	NIPDAU	Level-1-260C-UNLIM	-40 to 125	API
TLV2373IDGSR.B	Active	Production	VSSOP (DGS) | 10	2500 | LARGE T&R	Yes	NIPDAU	Level-1-260C-UNLIM	-40 to 125	API
TLV2373IDGSRG4	Active	Production	VSSOP (DGS) | 10	2500 | LARGE T&R	-	Call TI	Call TI	-40 to 125	
TLV2373IDR	Active	Production	SOIC (D) | 14	2500 | LARGE T&R	Yes	NIPDAU	Level-1-260C-UNLIM	-40 to 125	2373I
TLV2373IDR.A	Active	Production	SOIC (D) | 14	2500 | LARGE T&R	Yes	NIPDAU	Level-1-260C-UNLIM	-40 to 125	2373I
TLV2373IDR.B	Active	Production	SOIC (D) | 14	2500 | LARGE T&R	Yes	NIPDAU	Level-1-260C-UNLIM	-40 to 125	2373I
TLV2373IN	Active	Production	PDIP (N) | 14	25 | TUBE	Yes	NIPDAU	N/A for Pkg Type	-40 to 125	TLV2373I
TLV2373IN.A	Active	Production	PDIP (N) | 14	25 | TUBE	Yes	NIPDAU	N/A for Pkg Type	-40 to 125	TLV2373I
TLV2374ID	Active	Production	SOIC (D) | 14	50 | TUBE	Yes	NIPDAU	Level-1-260C-UNLIM	-40 to 125	2374I
TLV2374ID.A	Active	Production	SOIC (D) | 14	50 | TUBE	Yes	NIPDAU	Level-1-260C-UNLIM	-40 to 125	2374I

Orderable part number	Status (1)	Material type (2)	Package | Pins	Package qty | Carrier	RoHS (3)	Lead finish/ Ball material (4)	MSL rating/ Peak reflow (5)	Op temp (°C)	Part marking (6)
TLV2374ID.B	Active	Production	SOIC (D) | 14	50 | TUBE	Yes	NIPDAU	Level-1-260C-UNLIM	-40 to 125	2374I
TLV2374IDG4	Active	Production	SOIC (D) | 14	50 | TUBE	-	Call TI	Call TI	-40 to 125	
TLV2374IDR	Active	Production	SOIC (D) | 14	2500 | LARGE T&R	Yes	NIPDAU	Level-1-260C-UNLIM	-40 to 125	2374I
TLV2374IDR.A	Active	Production	SOIC (D) | 14	2500 | LARGE T&R	Yes	NIPDAU	Level-1-260C-UNLIM	-40 to 125	2374I
TLV2374IDR.B	Active	Production	SOIC (D) | 14	2500 | LARGE T&R	Yes	NIPDAU	Level-1-260C-UNLIM	-40 to 125	2374I
TLV2374IN	Active	Production	PDIP (N) | 14	25 | TUBE	Yes	NIPDAU	N/A for Pkg Type	-40 to 125	2374I
TLV2374IN.A	Active	Production	PDIP (N) | 14	25 | TUBE	Yes	NIPDAU	N/A for Pkg Type	-40 to 125	2374I
TLV2374IN.B	Active	Production	PDIP (N) | 14	25 | TUBE	Yes	NIPDAU	N/A for Pkg Type	-40 to 125	2374I
TLV2374IPW	Active	Production	TSSOP (PW) | 14	90 | TUBE	Yes	NIPDAU	Level-1-260C-UNLIM	-40 to 125	2374I
TLV2374IPW.A	Active	Production	TSSOP (PW) | 14	90 | TUBE	Yes	NIPDAU	Level-1-260C-UNLIM	-40 to 125	2374I
TLV2374IPW.B	Active	Production	TSSOP (PW) | 14	90 | TUBE	Yes	NIPDAU	Level-1-260C-UNLIM	-40 to 125	2374I
TLV2374IPWR	Active	Production	TSSOP (PW) | 14	2000 | LARGE T&R	Yes	NIPDAU	Level-1-260C-UNLIM	-40 to 125	2374I
TLV2374IPWR.A	Active	Production	TSSOP (PW) | 14	2000 | LARGE T&R	Yes	NIPDAU	Level-1-260C-UNLIM	-40 to 125	2374I
TLV2374IPWR.B	Active	Production	TSSOP (PW) | 14	2000 | LARGE T&R	Yes	NIPDAU	Level-1-260C-UNLIM	-40 to 125	2374I
TLV2374IPWRG4	Active	Production	TSSOP (PW) | 14	2000 | LARGE T&R	-	Call TI	Call TI	-40 to 125	
TLV2375ID	Active	Production	SOIC (D) | 16	40 | TUBE	Yes	NIPDAU	Level-1-260C-UNLIM	-40 to 125	2375I
TLV2375ID.A	Active	Production	SOIC (D) | 16	40 | TUBE	Yes	NIPDAU	Level-1-260C-UNLIM	-40 to 125	2375I
TLV2375ID.B	Active	Production	SOIC (D) | 16	40 | TUBE	Yes	NIPDAU	Level-1-260C-UNLIM	-40 to 125	2375I
TLV2375IDR	Active	Production	SOIC (D) | 16	2500 | LARGE T&R	Yes	NIPDAU	Level-1-260C-UNLIM	-40 to 125	2375I
TLV2375IDR.A	Active	Production	SOIC (D) | 16	2500 | LARGE T&R	Yes	NIPDAU	Level-1-260C-UNLIM	-40 to 125	2375I
TLV2375IDR.B	Active	Production	SOIC (D) | 16	2500 | LARGE T&R	Yes	NIPDAU	Level-1-260C-UNLIM	-40 to 125	2375I
TLV2375IN	Active	Production	PDIP (N) | 16	25 | TUBE	Yes	NIPDAU	N/A for Pkg Type	-40 to 125	2375I
TLV2375IN.A	Active	Production	PDIP (N) | 16	25 | TUBE	Yes	NIPDAU	N/A for Pkg Type	-40 to 125	2375I
TLV2375IN.B	Active	Production	PDIP (N) | 16	25 | TUBE	Yes	NIPDAU	N/A for Pkg Type	-40 to 125	2375I
TLV2375IPW	Active	Production	TSSOP (PW) | 16	90 | TUBE	Yes	NIPDAU	Level-1-260C-UNLIM	-40 to 125	2375I
TLV2375IPW.A	Active	Production	TSSOP (PW) | 16	90 | TUBE	Yes	NIPDAU	Level-1-260C-UNLIM	-40 to 125	2375I
TLV2375IPW.B	Active	Production	TSSOP (PW) | 16	90 | TUBE	Yes	NIPDAU	Level-1-260C-UNLIM	-40 to 125	2375I
TLV2375IPWR	Active	Production	TSSOP (PW) | 16	2000 | LARGE T&R	Yes	NIPDAU	Level-1-260C-UNLIM	-40 to 125	2375I
TLV2375IPWR.A	Active	Production	TSSOP (PW) | 16	2000 | LARGE T&R	Yes	NIPDAU	Level-1-260C-UNLIM	-40 to 125	2375I
TLV2375IPWR.B	Active	Production	TSSOP (PW) | 16	2000 | LARGE T&R	Yes	NIPDAU	Level-1-260C-UNLIM	-40 to 125	2375I
TLV2375IPWRG4	Active	Production	TSSOP (PW) | 16	2000 | LARGE T&R	-	Call TI	Call TI	-40 to 125	

(1) **Status:** For more details on status, see our product life cycle.

(2) **Material type:** When designated, preproduction parts are prototypes/experimental devices, and are not yet approved or released for full production. Testing and final process, including without limitation quality assurance, reliability performance testing, and/or process qualification, may not yet be complete, and this item is subject to further changes or possible discontinuation. If available for ordering, purchases will be subject to an additional waiver at checkout, and are intended for early internal evaluation purposes only. These items are sold without warranties of any kind.

(3) **RoHS values:** Yes, No, RoHS Exempt. See the TI RoHS Statement for additional information and value definition.

(4) **Lead finish/Ball material:** Parts may have multiple material finish options. Finish options are separated by a vertical ruled line. Lead finish/Ball material values may wrap to two lines if the finish value exceeds the maximum column width.

(5) **MSL rating/Peak reflow:** The moisture sensitivity level ratings and peak solder (reflow) temperatures. In the event that a part has multiple moisture sensitivity ratings, only the lowest level per JEDEC standards is shown. Refer to the shipping label for the actual reflow temperature that will be used to mount the part to the printed circuit board.

(6) **Part marking:** There may be an additional marking, which relates to the logo, the lot trace code information, or the environmental category of the part.

Multiple part markings will be inside parentheses. Only one part marking contained in parentheses and separated by a "~" will appear on a part. If a line is indented then it is a continuation of the previous line and the two combined represent the entire part marking for that device.

Important Information and Disclaimer: The information provided on this page represents TI's knowledge and belief as of the date that it is provided. TI bases its knowledge and belief on information provided by third parties, and makes no representation or warranty as to the accuracy of such information. Efforts are underway to better integrate information from third parties. TI has taken and continues to take reasonable steps to provide representative and accurate information but may not have conducted destructive testing or chemical analysis on incoming materials and chemicals. TI and TI suppliers consider certain information to be proprietary, and thus CAS numbers and other limited information may not be available for release.

In no event shall TI's liability arising out of such information exceed the total purchase price of the TI part(s) at issue in this document sold by TI to Customer on an annual basis.

OTHER QUALIFIED VERSIONS OF TLV2371, TLV2372, TLV2374 :

- Automotive : TLV2371-Q1, TLV2372-Q1, TLV2374-Q1
- Enhanced Product : TLV2374-EP

NOTE: Qualified Version Definitions:

- Automotive - Q100 devices qualified for high-reliability automotive applications targeting zero defects
- Enhanced Product - Supports Defense, Aerospace and Medical Applications

TAPE AND REEL INFORMATION

REEL DIMENSIONS

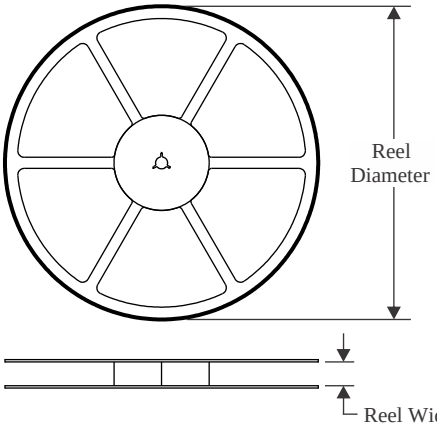

TAPE DIMENSIONS

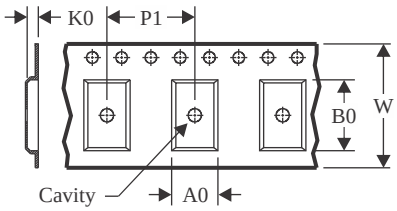

A0	Dimension designed to accommodate the component width
B0	Dimension designed to accommodate the component length
K0	Dimension designed to accommodate the component thickness
W	Overall width of the carrier tape
P1	Pitch between successive cavity centers

QUADRANT ASSIGNMENTS FOR PIN 1 ORIENTATION IN TAPE

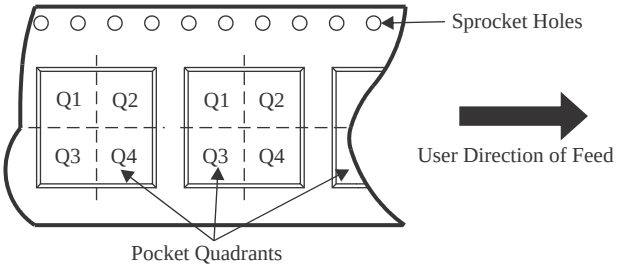

*All dimensions are nominal

Device	Package Type	Package Drawing	Pins	SPQ	Reel Diameter (mm)	Reel Width W1 (mm)	A0 (mm)	B0 (mm)	K0 (mm)	P1 (mm)	W (mm)	Pin1 Quadrant
TLV2370IDBVR	SOT-23	DBV	6	3000	180.0	8.4	3.2	3.2	1.4	4.0	8.0	Q3
TLV2370IDBVR1G4	SOT-23	DBV	6	3000	180.0	8.4	3.2	3.2	1.4	4.0	8.0	Q3
TLV2370IDBVT	SOT-23	DBV	6	250	180.0	8.4	3.2	3.2	1.4	4.0	8.0	Q3
TLV2370IDR	SOIC	D	8	2500	330.0	12.4	6.4	5.2	2.1	8.0	12.0	Q1
TLV2371IDBVR	SOT-23	DBV	5	3000	178.0	9.0	3.23	3.17	1.37	4.0	8.0	Q3
TLV2371IDBVT	SOT-23	DBV	5	250	178.0	9.0	3.3	3.2	1.4	4.0	8.0	Q3
TLV2371IDR	SOIC	D	8	2500	330.0	12.4	6.4	5.2	2.1	8.0	12.0	Q1
TLV2372IDGKR	VSSOP	DGK	8	2500	330.0	12.4	5.3	3.4	1.4	8.0	12.0	Q1
TLV2372IDR	SOIC	D	8	2500	330.0	12.4	6.4	5.2	2.1	8.0	12.0	Q1
TLV2373IDGSR	VSSOP	DGS	10	2500	330.0	12.4	5.3	3.4	1.4	8.0	12.0	Q1
TLV2373IDGSR	VSSOP	DGS	10	2500	330.0	12.4	5.3	3.4	1.4	8.0	12.0	Q1
TLV2373IDR	SOIC	D	14	2500	330.0	16.4	6.5	9.0	2.1	8.0	16.0	Q1
TLV2374IDR	SOIC	D	14	2500	330.0	16.4	6.5	9.0	2.1	8.0	16.0	Q1
TLV2374IPWR	TSSOP	PW	14	2000	330.0	12.4	6.9	5.6	1.6	8.0	12.0	Q1
TLV2375IDR	SOIC	D	16	2500	330.0	16.4	6.5	10.3	2.1	8.0	16.0	Q1
TLV2375IPWR	TSSOP	PW	16	2000	330.0	12.4	6.9	5.6	1.6	8.0	12.0	Q1

TAPE AND REEL BOX DIMENSIONS

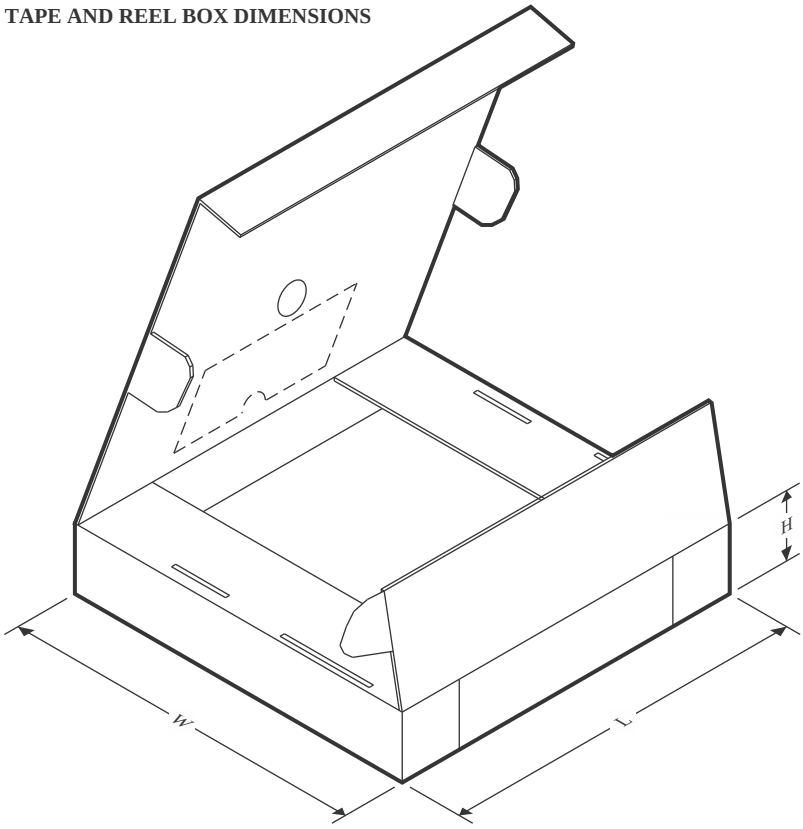

*All dimensions are nominal

Device	Package Type	Package Drawing	Pins	SPQ	Length (mm)	Width (mm)	Height (mm)
TLV2370IDBVR	SOT-23	DBV	6	3000	210.0	185.0	35.0
TLV2370IDBVR1G4	SOT-23	DBV	6	3000	210.0	185.0	35.0
TLV2370IDBVT	SOT-23	DBV	6	250	210.0	185.0	35.0
TLV2370IDR	SOIC	D	8	2500	353.0	353.0	32.0
TLV2371IDBVR	SOT-23	DBV	5	3000	180.0	180.0	18.0
TLV2371IDBVT	SOT-23	DBV	5	250	180.0	180.0	18.0
TLV2371IDR	SOIC	D	8	2500	353.0	353.0	32.0
TLV2372IDGKR	VSSOP	DGK	8	2500	364.0	364.0	27.0
TLV2372IDR	SOIC	D	8	2500	353.0	353.0	32.0
TLV2373IDGSR	VSSOP	DGS	10	2500	364.0	364.0	27.0
TLV2373IDGSR	VSSOP	DGS	10	2500	358.0	335.0	35.0
TLV2373IDR	SOIC	D	14	2500	353.0	353.0	32.0
TLV2374IDR	SOIC	D	14	2500	353.0	353.0	32.0
TLV2374IPWR	TSSOP	PW	14	2000	356.0	356.0	35.0
TLV2375IDR	SOIC	D	16	2500	353.0	353.0	32.0
TLV2375IPWR	TSSOP	PW	16	2000	356.0	356.0	35.0

TUBE

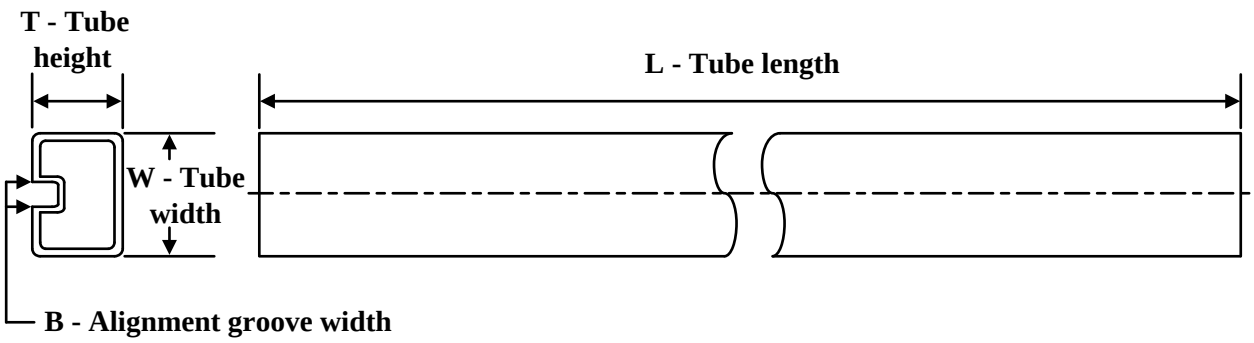

*All dimensions are nominal

Device	Package Name	Package Type	Pins	SPQ	L (mm)	W (mm)	T (µm)	B (mm)
TLV2370IP	P	PDIP	8	50	506	13.97	11230	4.32
TLV2370IP.B	P	PDIP	8	50	506	13.97	11230	4.32
TLV2371ID	D	SOIC	8	75	507	8	3940	4.32
TLV2371ID.B	D	SOIC	8	75	507	8	3940	4.32
TLV2371IP	P	PDIP	8	50	506	13.97	11230	4.32
TLV2371IP.B	P	PDIP	8	50	506	13.97	11230	4.32
TLV2372ID	D	SOIC	8	75	507	8	3940	4.32
TLV2372ID.A	D	SOIC	8	75	507	8	3940	4.32
TLV2372ID.B	D	SOIC	8	75	507	8	3940	4.32
TLV2372IDGK	DGK	VSSOP	8	80	330	6.55	500	2.88
TLV2372IDGK.A	DGK	VSSOP	8	80	330	6.55	500	2.88
TLV2372IDGK.B	DGK	VSSOP	8	80	330	6.55	500	2.88
TLV2372IP	P	PDIP	8	50	506	13.97	11230	4.32
TLV2372IP.A	P	PDIP	8	50	506	13.97	11230	4.32
TLV2372IP.B	P	PDIP	8	50	506	13.97	11230	4.32
TLV2373IDGS	DGS	VSSOP	10	80	330	6.55	500	2.88
TLV2373IDGS.A	DGS	VSSOP	10	80	330	6.55	500	2.88
TLV2373IDGS.B	DGS	VSSOP	10	80	330	6.55	500	2.88
TLV2373IN	N	PDIP	14	25	506	13.97	11230	4.32
TLV2373IN.A	N	PDIP	14	25	506	13.97	11230	4.32
TLV2374ID	D	SOIC	14	50	507	8	3940	4.32
TLV2374ID.A	D	SOIC	14	50	507	8	3940	4.32
TLV2374ID.B	D	SOIC	14	50	507	8	3940	4.32
TLV2374IN	N	PDIP	14	25	506	13.97	11230	4.32
TLV2374IN.A	N	PDIP	14	25	506	13.97	11230	4.32
TLV2374IN.B	N	PDIP	14	25	506	13.97	11230	4.32
TLV2374IPW	PW	TSSOP	14	90	530	10.2	3600	3.5
TLV2374IPW.A	PW	TSSOP	14	90	530	10.2	3600	3.5
TLV2374IPW.B	PW	TSSOP	14	90	530	10.2	3600	3.5

Device	Package Name	Package Type	Pins	SPQ	L (mm)	W (mm)	T (µm)	B (mm)
TLV2375ID	D	SOIC	16	40	507	8	3940	4.32
TLV2375ID.A	D	SOIC	16	40	507	8	3940	4.32
TLV2375ID.B	D	SOIC	16	40	507	8	3940	4.32
TLV2375IN	N	PDIP	16	25	506	13.97	11230	4.32
TLV2375IN.A	N	PDIP	16	25	506	13.97	11230	4.32
TLV2375IN.B	N	PDIP	16	25	506	13.97	11230	4.32
TLV2375IPW	PW	TSSOP	16	90	530	10.2	3600	3.5
TLV2375IPW.A	PW	TSSOP	16	90	530	10.2	3600	3.5
TLV2375IPW.B	PW	TSSOP	16	90	530	10.2	3600	3.5

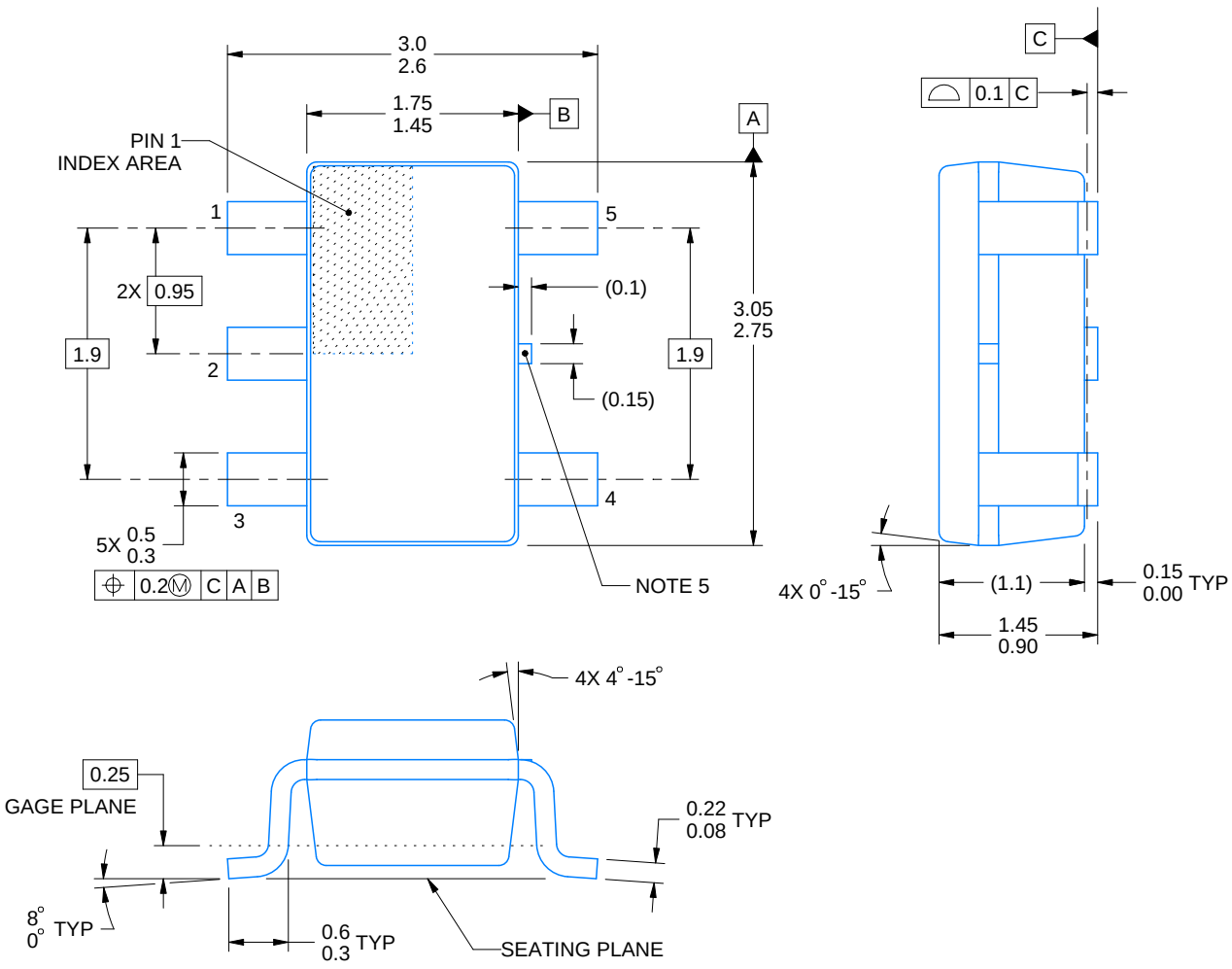

4214839/K 08/2024

NOTES:

1. All linear dimensions are in millimeters. Any dimensions in parenthesis are for reference only. Dimensioning and tolerancing per ASME Y14.5M.
2. This drawing is subject to change without notice.
3. Refernce JEDEC MO-178.
4. Body dimensions do not include mold flash, protrusions, or gate burrs. Mold flash, protrusions, or gate burrs shall not exceed 0.25 mm per side.
5. Support pin may differ or may not be present.

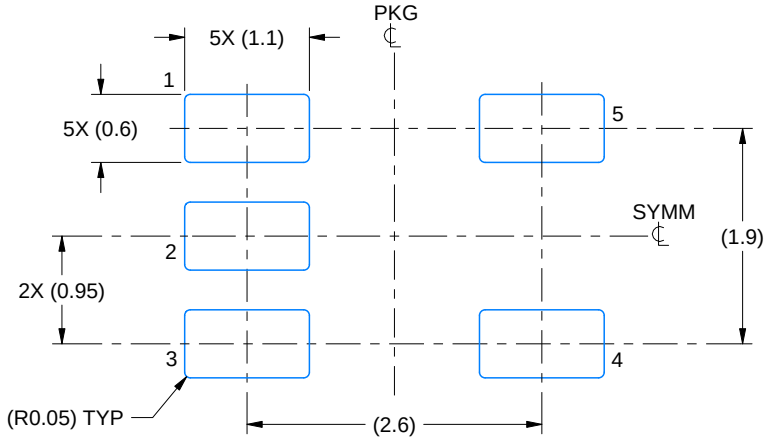

LAND PATTERN EXAMPLE
EXPOSED METAL SHOWN
SCALE:15X

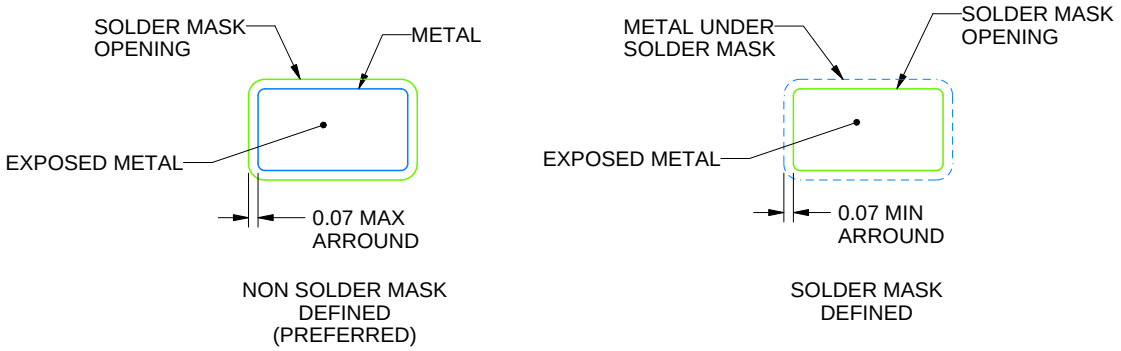

SOLDER MASK DETAILS

4214839/K 08/2024

NOTES: (continued)

6. Publication IPC-7351 may have alternate designs.
7. Solder mask tolerances between and around signal pads can vary based on board fabrication site.

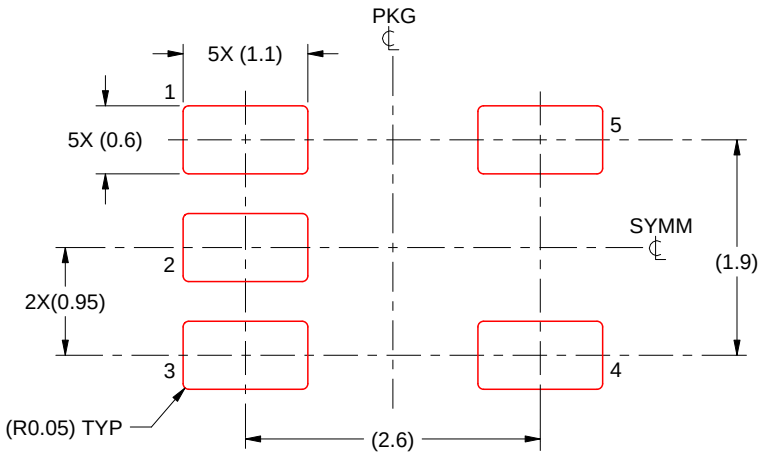

SOLDER PASTE EXAMPLE
BASED ON 0.125 mm THICK STENCIL
SCALE:15X

4214839/K 08/2024

NOTES: (continued)

8. Laser cutting apertures with trapezoidal walls and rounded corners may offer better paste release. IPC-7525 may have alternate design recommendations.
9. Board assembly site may have different recommendations for stencil design.

PACKAGE OUTLINE

DGK0008A

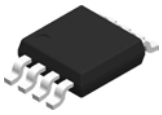

VSSOP - 1.1 mm max height

SMALL OUTLINE PACKAGE

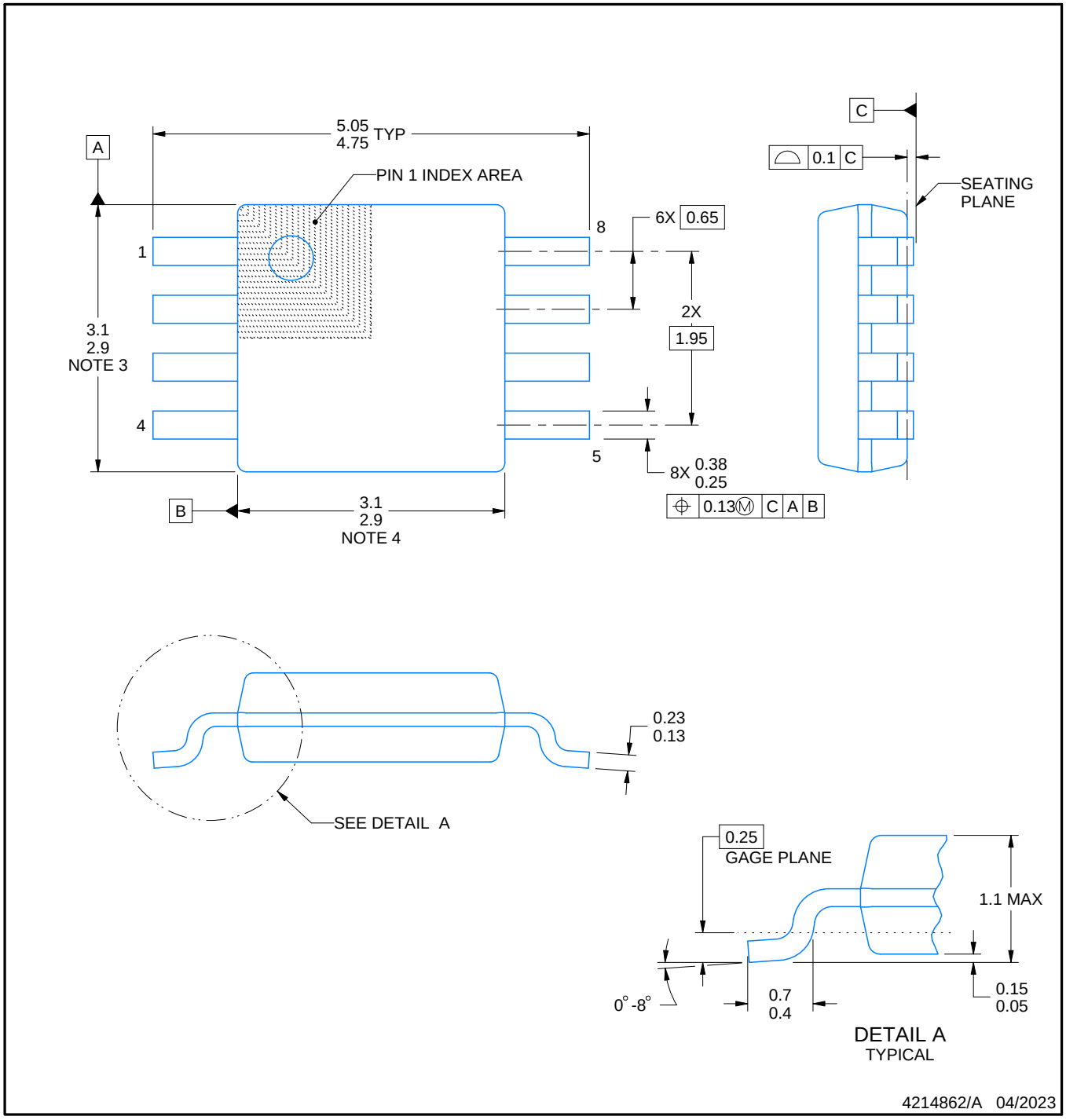

PowerPAD is a trademark of Texas Instruments.

NOTES:

1. All linear dimensions are in millimeters. Any dimensions in parenthesis are for reference only. Dimensioning and tolerancing per ASME Y14.5M.
2. This drawing is subject to change without notice.
3. This dimension does not include mold flash, protrusions, or gate burrs. Mold flash, protrusions, or gate burrs shall not exceed 0.15 mm per side.
4. This dimension does not include interlead flash. Interlead flash shall not exceed 0.25 mm per side.
5. Reference JEDEC registration MO-187.

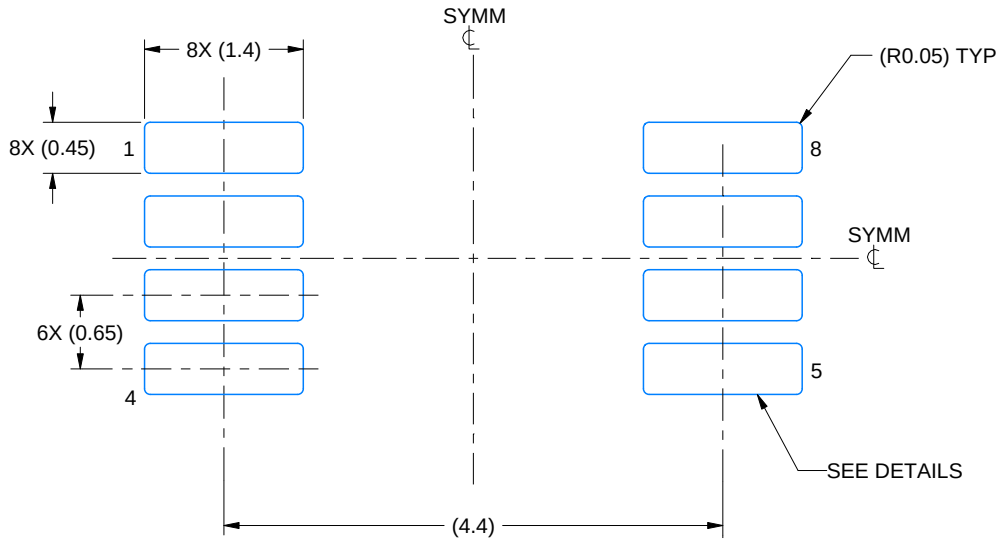

LAND PATTERN EXAMPLE
EXPOSED METAL SHOWN
SCALE: 15X

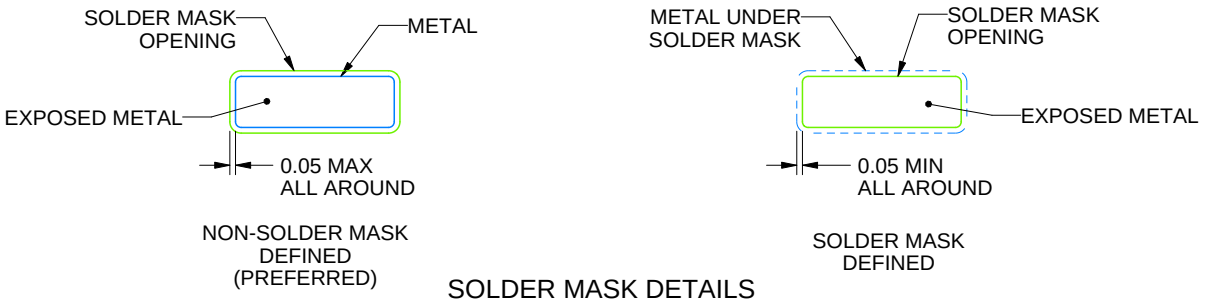

SOLDER MASK DETAILS

4214862/A 04/2023

NOTES: (continued)

6. Publication IPC-7351 may have alternate designs.
7. Solder mask tolerances between and around signal pads can vary based on board fabrication site.
8. Vias are optional depending on application, refer to device data sheet. If any vias are implemented, refer to their locations shown on this view. It is recommended that vias under paste be filled, plugged or tented.
9. Size of metal pad may vary due to creepage requirement.

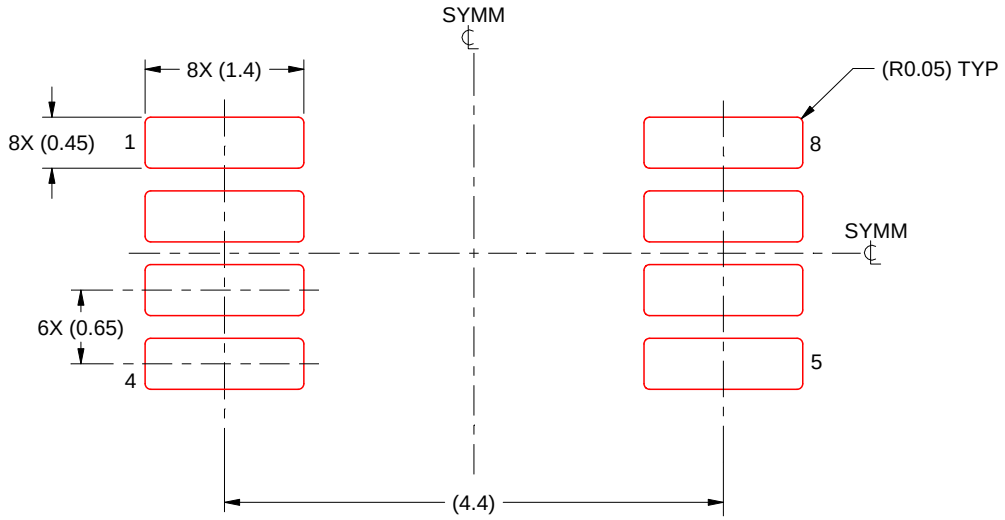

SOLDER PASTE EXAMPLE
SCALE: 15X

4214862/A 04/2023

NOTES: (continued)

11. Laser cutting apertures with trapezoidal walls and rounded corners may offer better paste release. IPC-7525 may have alternate design recommendations.
12. Board assembly site may have different recommendations for stencil design.

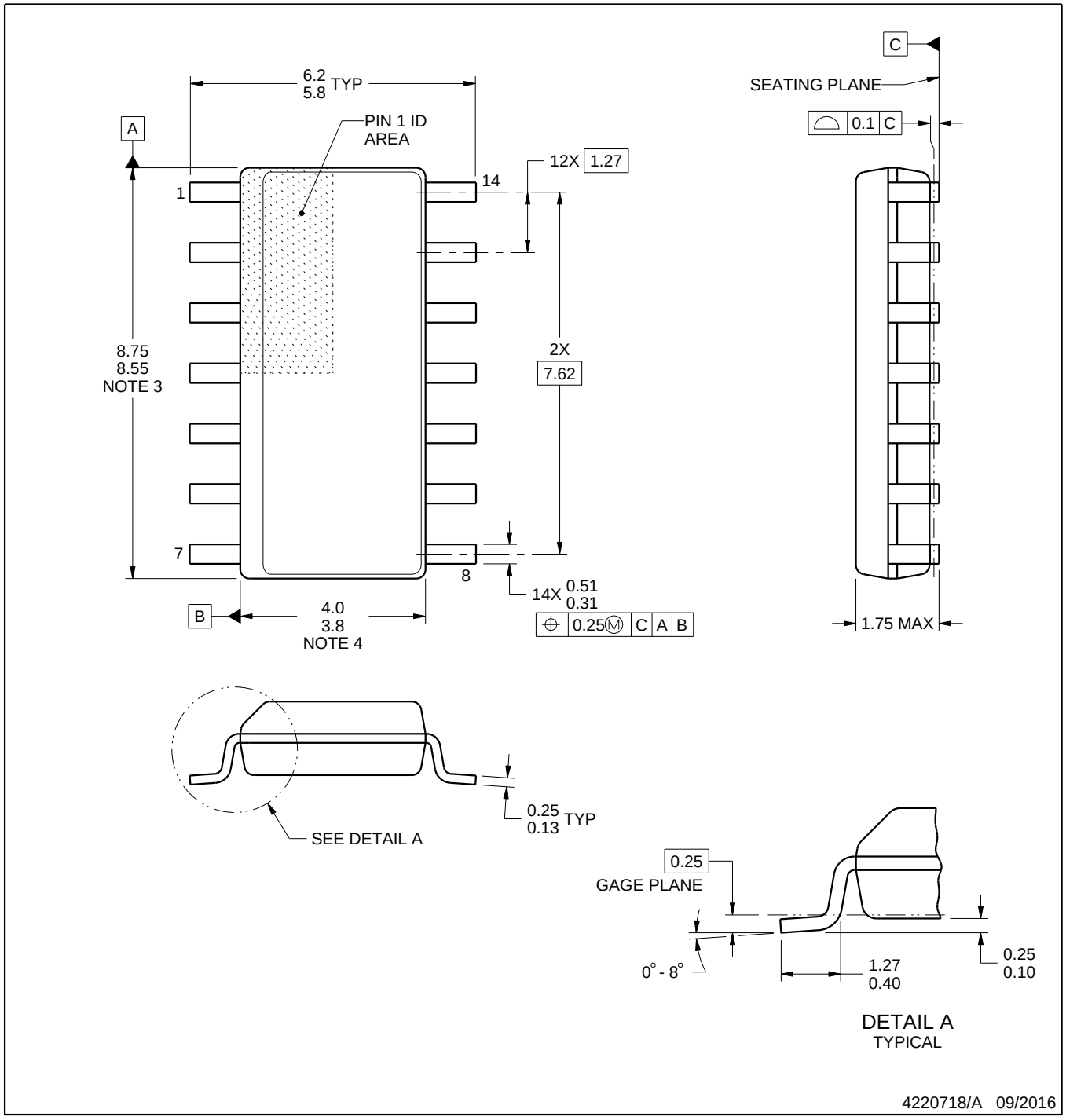

NOTES:

1. All linear dimensions are in millimeters. Dimensions in parenthesis are for reference only. Dimensioning and tolerancing per ASME Y14.5M.
2. This drawing is subject to change without notice.
3. This dimension does not include mold flash, protrusions, or gate burrs. Mold flash, protrusions, or gate burrs shall not exceed 0.15 mm, per side.
4. This dimension does not include interlead flash. Interlead flash shall not exceed 0.43 mm, per side.
5. Reference JEDEC registration MS-012, variation AB.

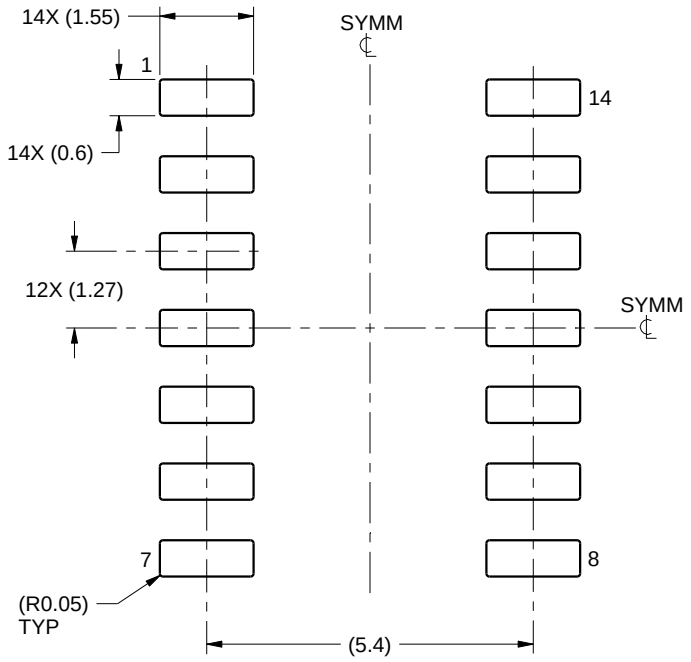

LAND PATTERN EXAMPLE
SCALE:8X

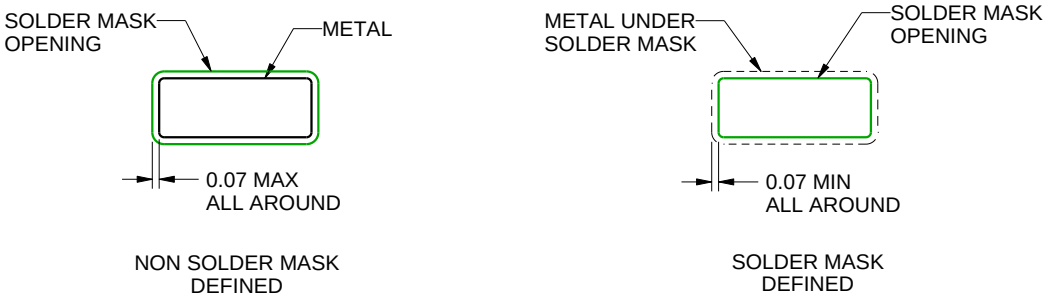

SOLDER MASK DETAILS

4220718/A 09/2016

NOTES: (continued)

6. Publication IPC-7351 may have alternate designs.
7. Solder mask tolerances between and around signal pads can vary based on board fabrication site.

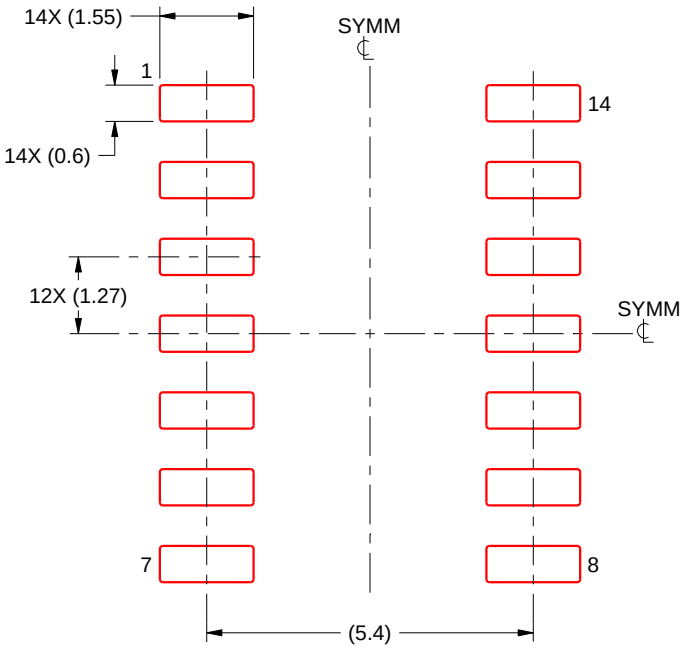

SOLDER PASTE EXAMPLE
BASED ON 0.125 mm THICK STENCIL
SCALE:8X

4220718/A 09/2016

NOTES: (continued)

8. Laser cutting apertures with trapezoidal walls and rounded corners may offer better paste release. IPC-7525 may have alternate design recommendations.
9. Board assembly site may have different recommendations for stencil design.

D (R–PDSO–G16) PLASTIC SMALL OUTLINE

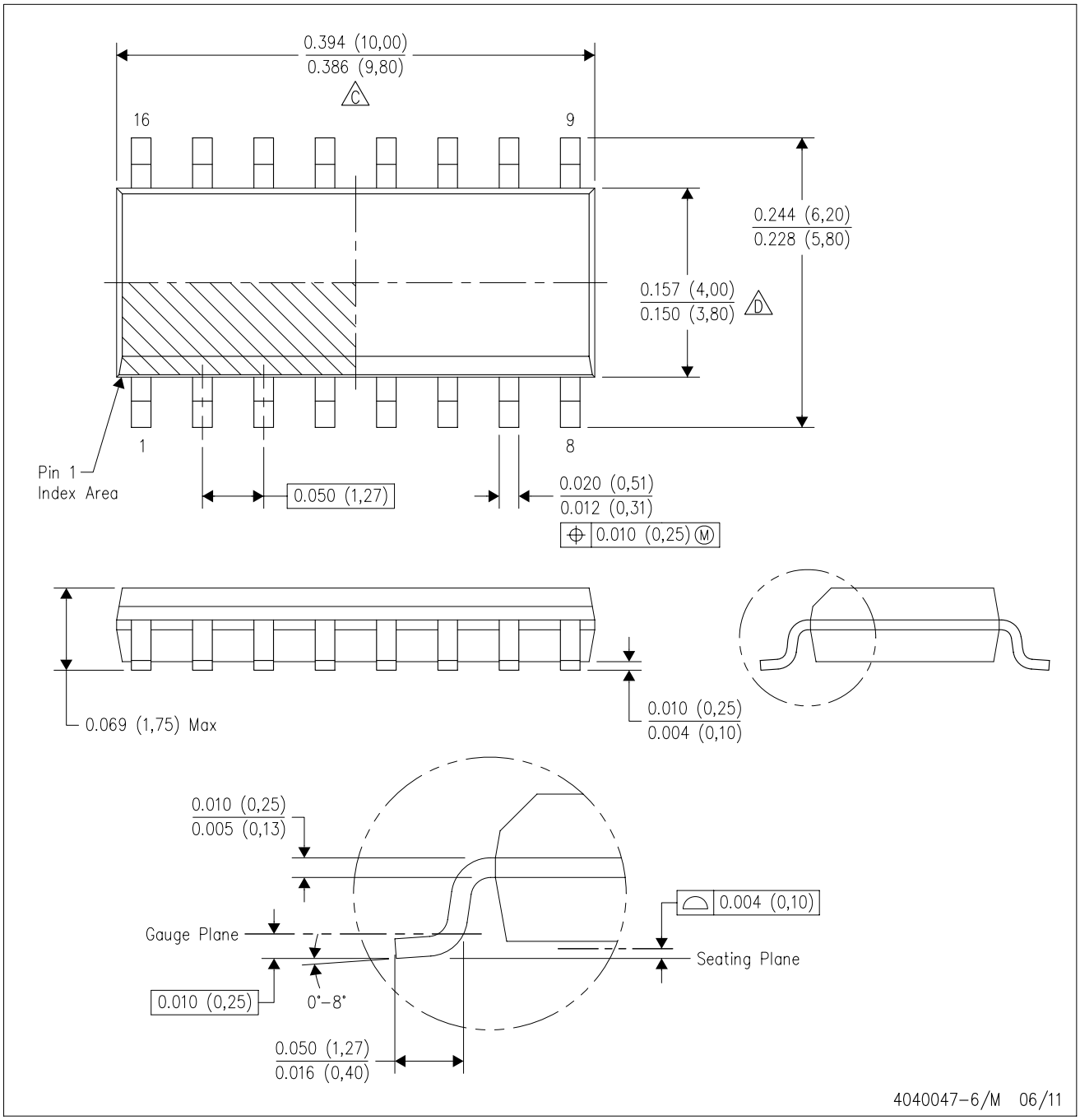

NOTES:
A. All linear dimensions are in inches (millimeters).
B. This drawing is subject to change without notice.
C. Body length does not include mold flash, protrusions, or gate burrs. Mold flash, protrusions, or gate burrs shall not exceed 0.006 (0,15) each side.
D. Body width does not include interlead flash. Interlead flash shall not exceed 0.017 (0,43) each side.
E. Reference JEDEC MS–012 variation AC.

PW0016A

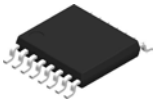

PACKAGE OUTLINE

TSSOP - 1.2 mm max height

SMALL OUTLINE PACKAGE

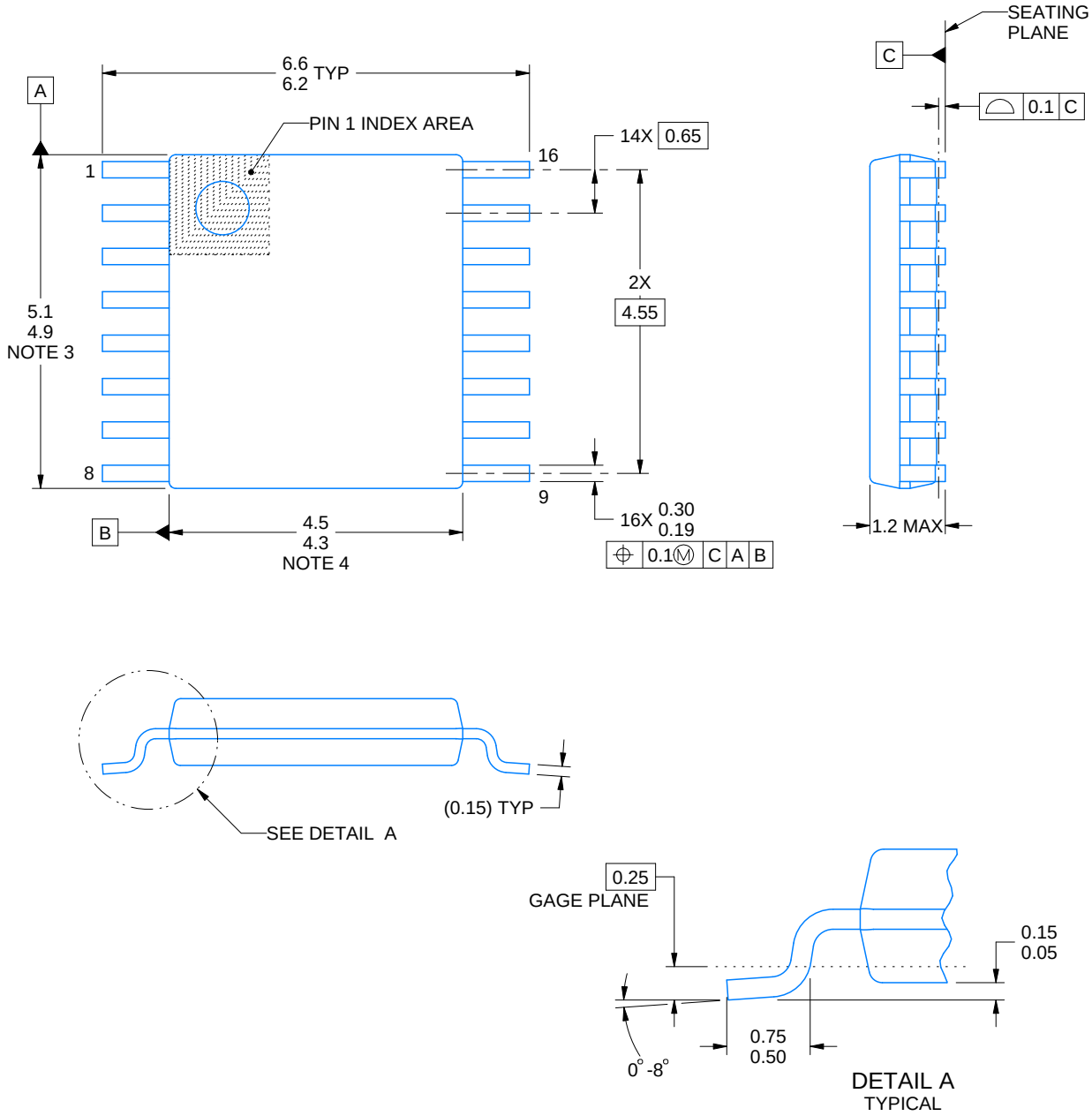

NOTES:

1. All linear dimensions are in millimeters. Any dimensions in parenthesis are for reference only. Dimensioning and tolerancing per ASME Y14.5M.
2. This drawing is subject to change without notice.
3. This dimension does not include mold flash, protrusions, or gate burrs. Mold flash, protrusions, or gate burrs shall not exceed 0.15 mm per side.
4. This dimension does not include interlead flash. Interlead flash shall not exceed 0.25 mm per side.
5. Reference JEDEC registration MO-153.

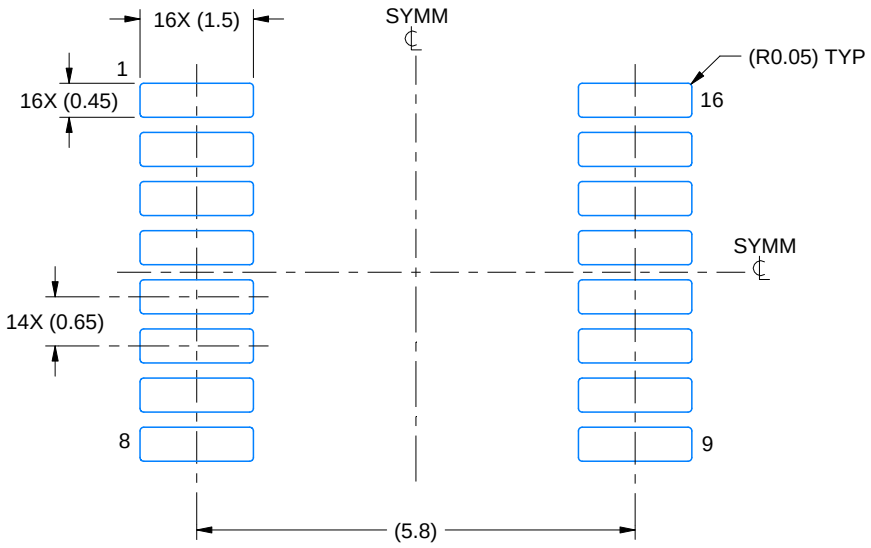

LAND PATTERN EXAMPLE
EXPOSED METAL SHOWN
SCALE: 10X

NON-SOLDER MASK DEFINED (PREFERRED)

SOLDER MASK DEFINED

SOLDER MASK DETAILS

4220204/A 02/2017

NOTES: (continued)

6. Publication IPC-7351 may have alternate designs.
7. Solder mask tolerances between and around signal pads can vary based on board fabrication site.

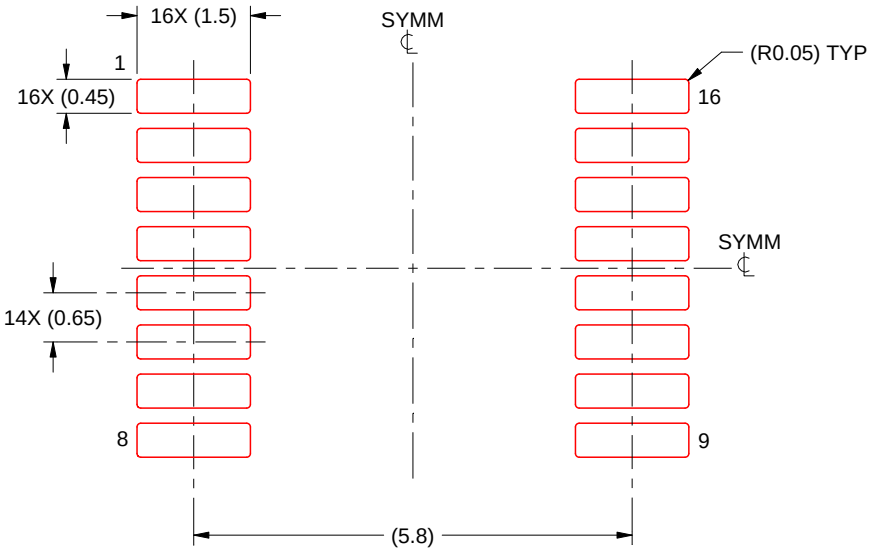

SOLDER PASTE EXAMPLE
BASED ON 0.125 mm THICK STENCIL
SCALE: 10X

4220204/A 02/2017

NOTES: (continued)

8. Laser cutting apertures with trapezoidal walls and rounded corners may offer better paste release. IPC-7525 may have alternate design recommendations.
9. Board assembly site may have different recommendations for stencil design.

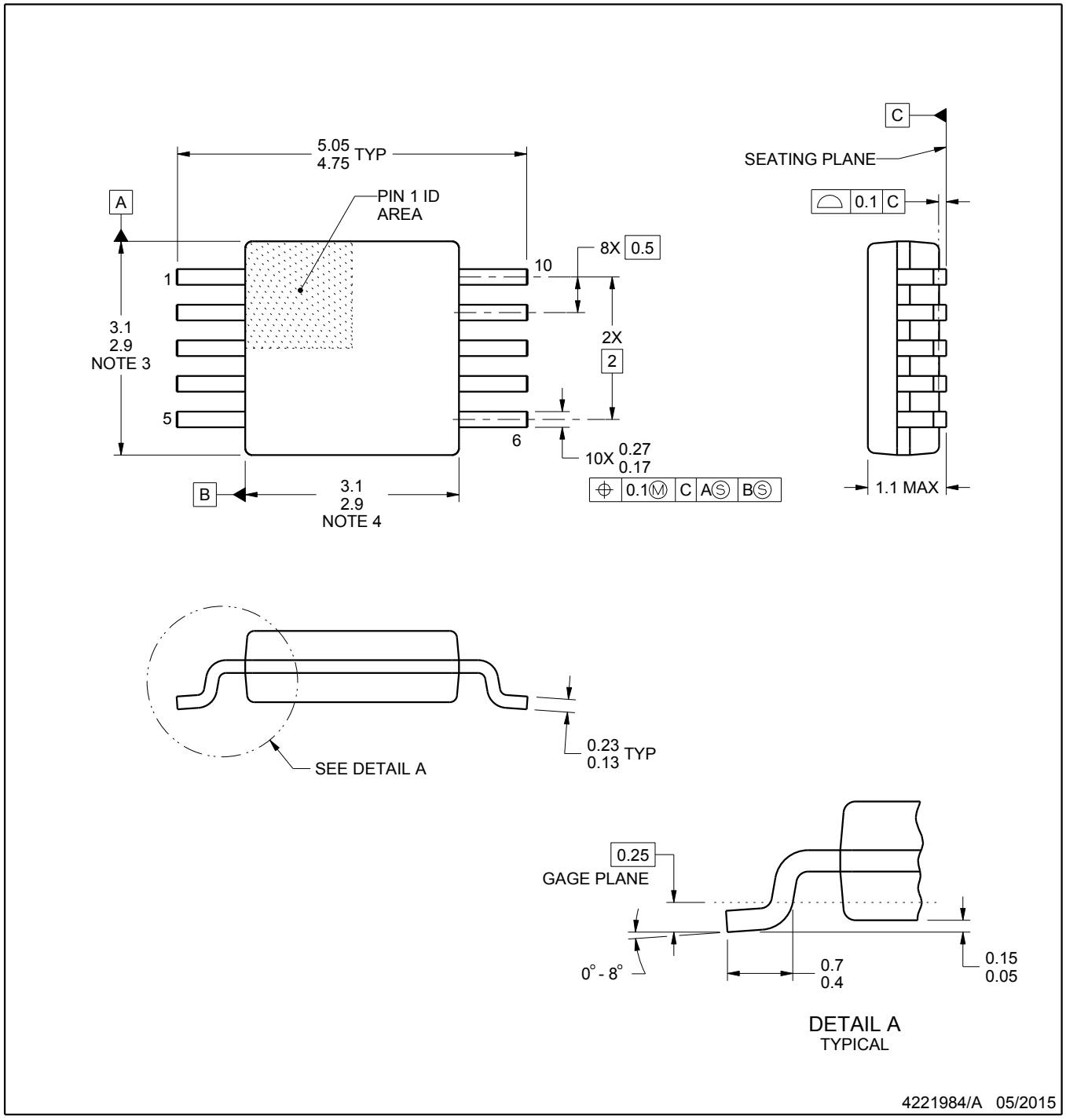

NOTES:

1. All linear dimensions are in millimeters. Any dimensions in parenthesis are for reference only. Dimensioning and tolerancing per ASME Y14.5M.
2. This drawing is subject to change without notice.
3. This dimension does not include mold flash, protrusions, or gate burrs. Mold flash, protrusions, or gate burrs shall not exceed 0.15 mm per side.
4. This dimension does not include interlead flash. Interlead flash shall not exceed 0.25 mm per side.
5. Reference JEDEC registration MO-187, variation BA.

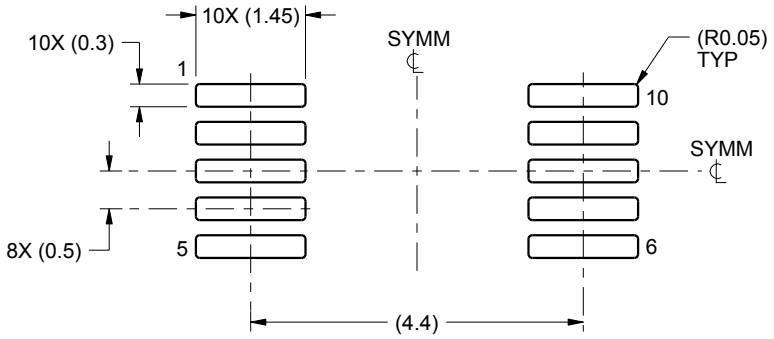

LAND PATTERN EXAMPLE
SCALE:10X

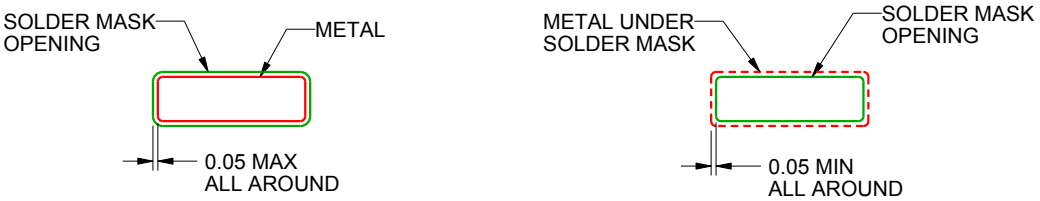

NON SOLDER MASK
DEFINED

SOLDER MASK
DEFINED

SOLDER MASK DETAILS
NOT TO SCALE

4221984/A 05/2015

NOTES: (continued)

6. Publication IPC-7351 may have alternate designs.
7. Solder mask tolerances between and around signal pads can vary based on board fabrication site.

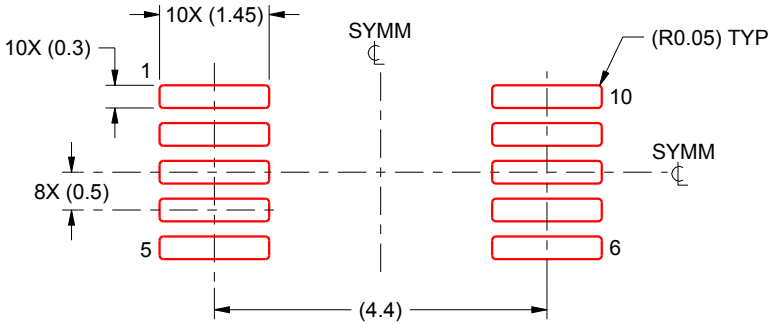

SOLDER PASTE EXAMPLE
BASED ON 0.125 mm THICK STENCIL
SCALE:10X

4221984/A 05/2015

NOTES: (continued)

8. Laser cutting apertures with trapezoidal walls and rounded corners may offer better paste release. IPC-7525 may have alternate design recommendations.
9. Board assembly site may have different recommendations for stencil design.

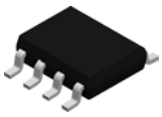

PACKAGE OUTLINE

D0008A

SOIC - 1.75 mm max height

SMALL OUTLINE INTEGRATED CIRCUIT

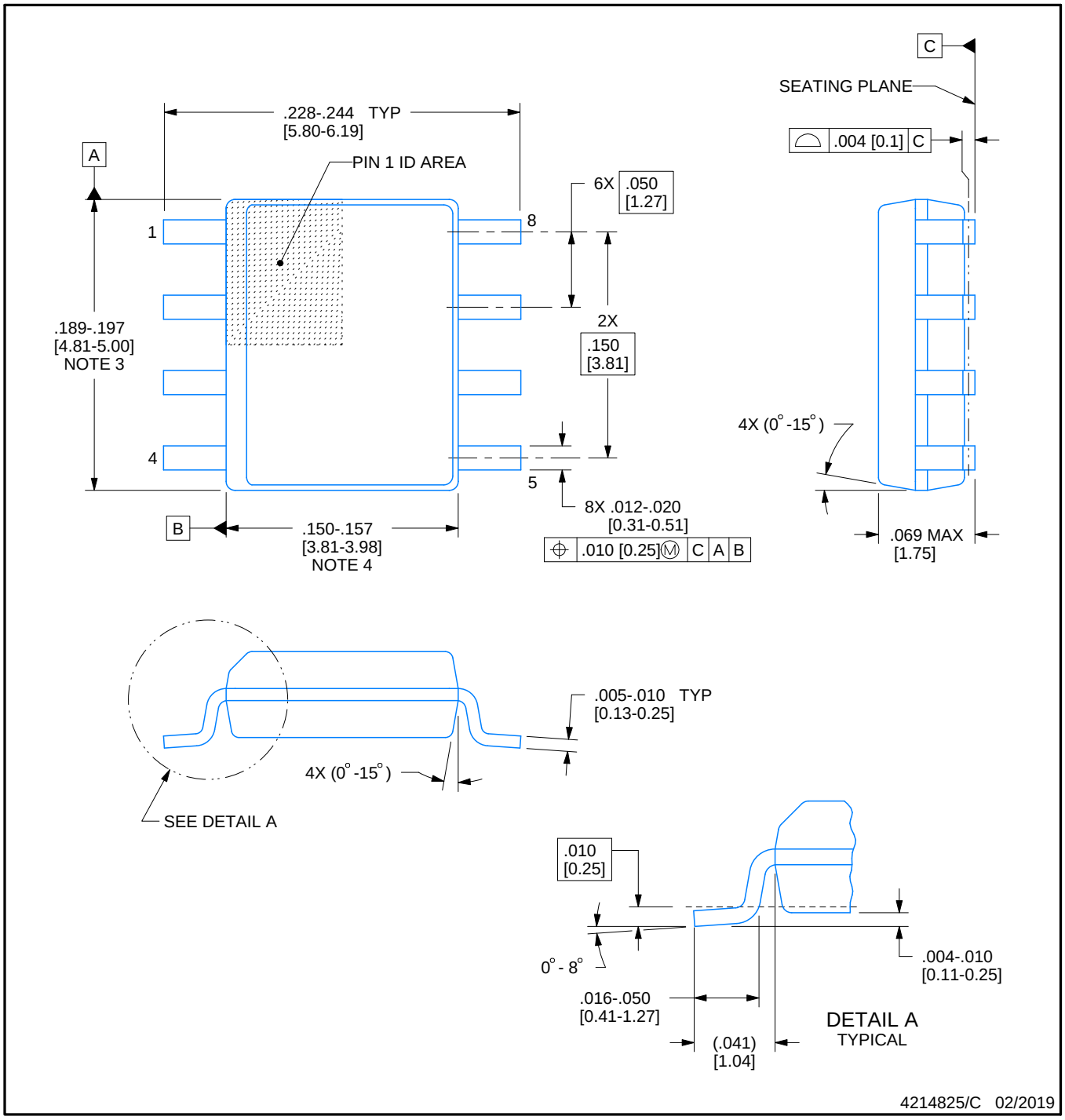

NOTES:

1. Linear dimensions are in inches [millimeters]. Dimensions in parenthesis are for reference only. Controlling dimensions are in inches. Dimensioning and tolerancing per ASME Y14.5M.
2. This drawing is subject to change without notice.
3. This dimension does not include mold flash, protrusions, or gate burrs. Mold flash, protrusions, or gate burrs shall not exceed .006 [0.15] per side.
4. This dimension does not include interlead flash.
5. Reference JEDEC registration MS-012, variation AA.

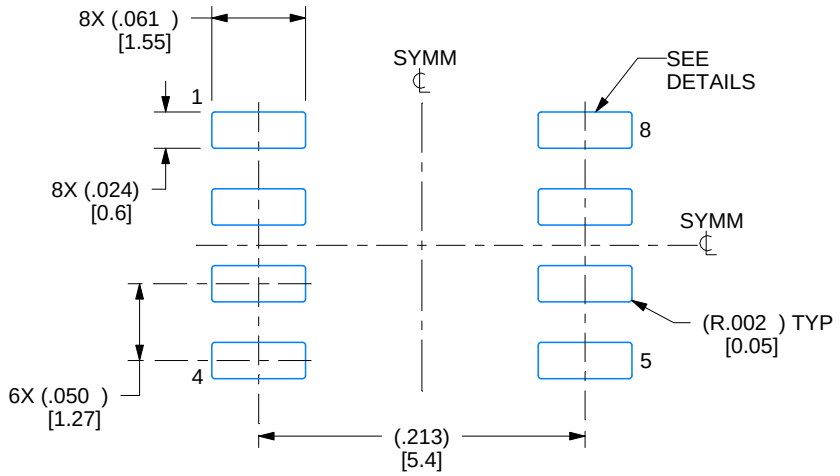

LAND PATTERN EXAMPLE
EXPOSED METAL SHOWN
SCALE:8X

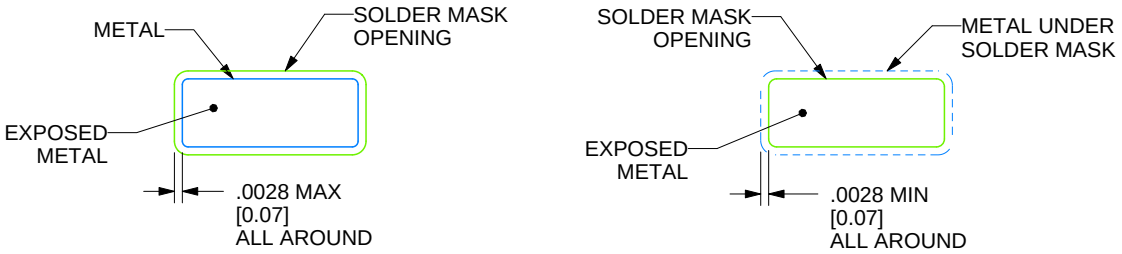

SOLDER MASK DETAILS

4214825/C 02/2019

NOTES: (continued)

6. Publication IPC-7351 may have alternate designs.
7. Solder mask tolerances between and around signal pads can vary based on board fabrication site.

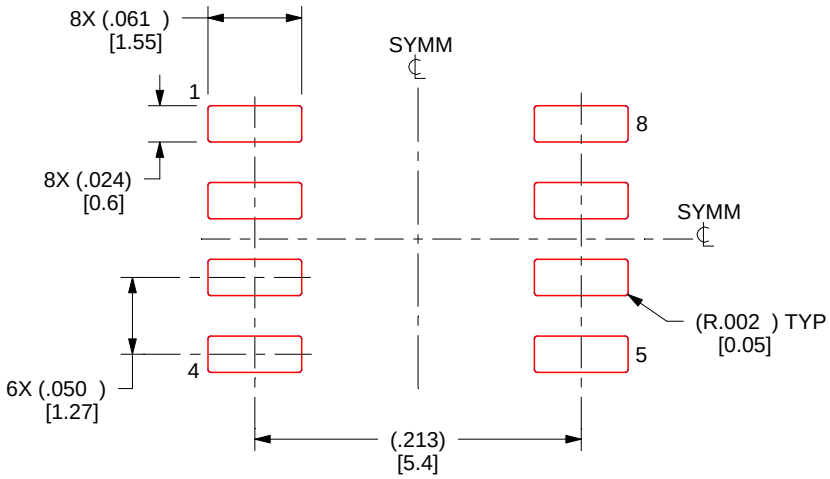

SOLDER PASTE EXAMPLE
BASED ON .005 INCH [0.125 MM] THICK STENCIL
SCALE:8X

4214825/C 02/2019

NOTES: (continued)

8. Laser cutting apertures with trapezoidal walls and rounded corners may offer better paste release. IPC-7525 may have alternate design recommendations.
9. Board assembly site may have different recommendations for stencil design.

P (R–PDIP–T8) PLASTIC DUAL–IN–LINE PACKAGE

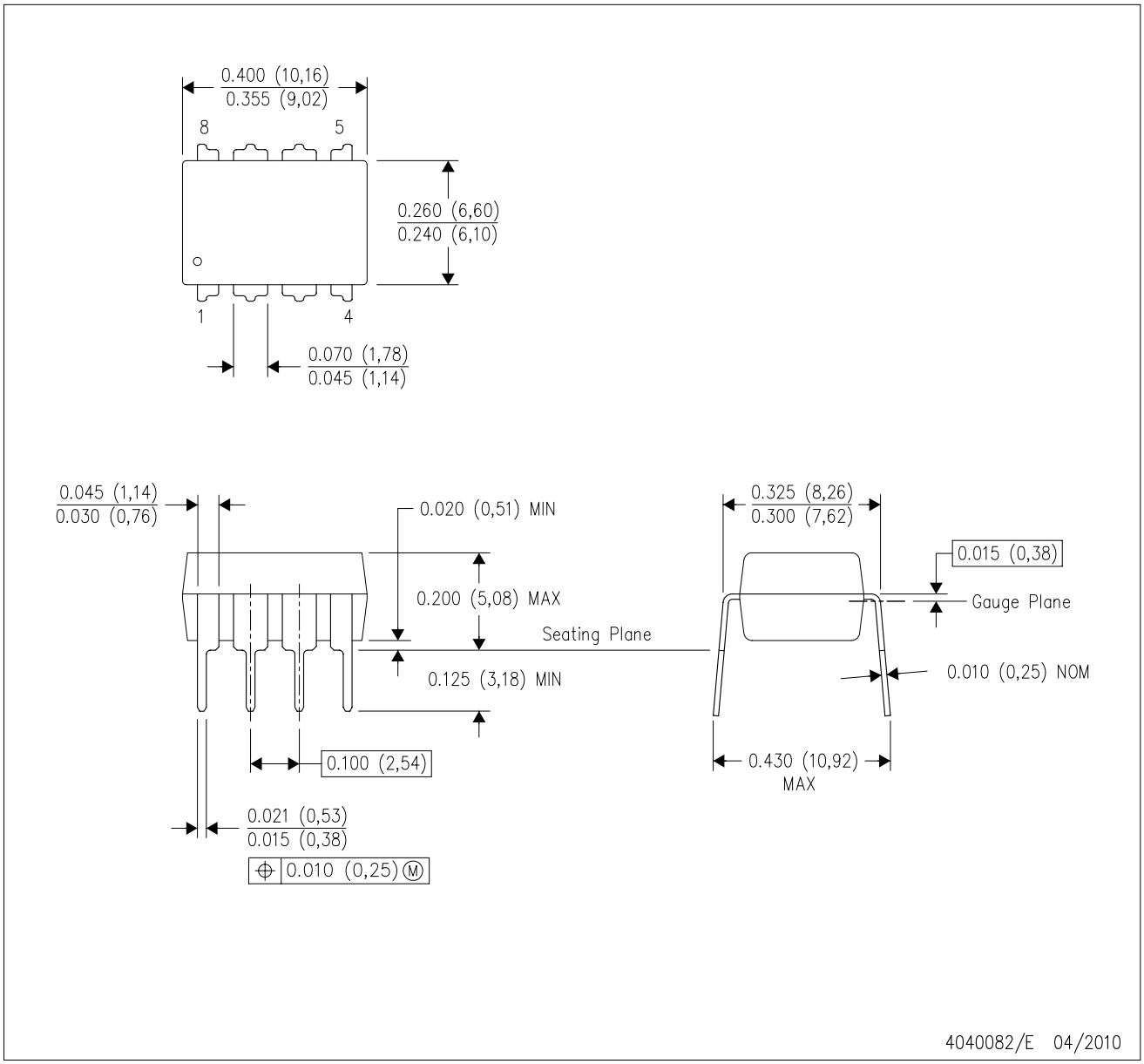

NOTES:
A. All linear dimensions are in inches (millimeters).
B. This drawing is subject to change without notice.
C. Falls within JEDEC MS–001 variation BA.

N (R–PDIP–T**) PLASTIC DUAL–IN–LINE PACKAGE

16 PINS SHOWN

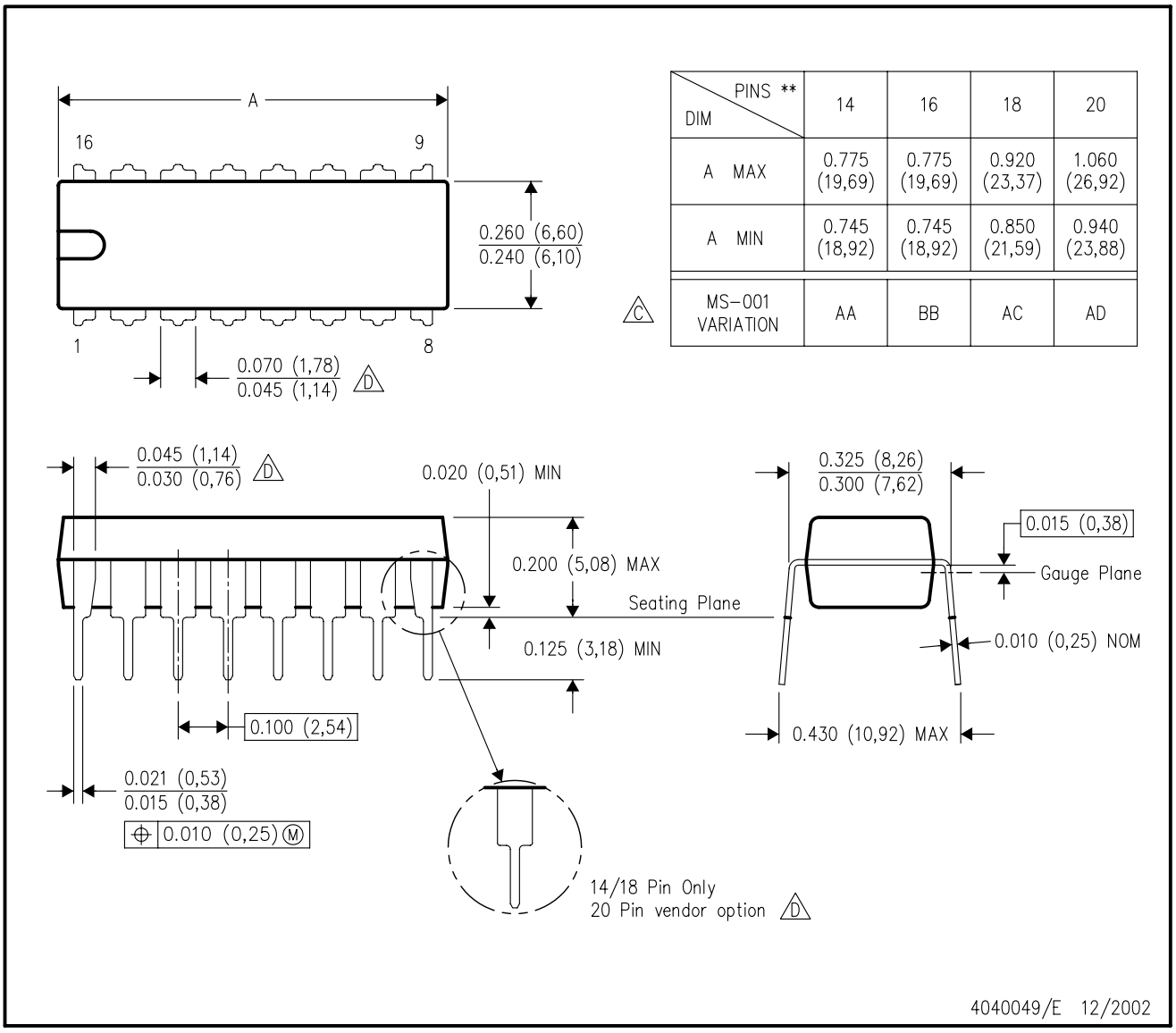

DIM \ PINS **	14	16	18	20
A MAX	0.775 (19,69)	0.775 (19,69)	0.920 (23,37)	1.060 (26,92)
A MIN	0.745 (18,92)	0.745 (18,92)	0.850 (21,59)	0.940 (23,88)
MS–001 VARIATION (C)	AA	BB	AC	AD

NOTES:
A. All linear dimensions are in inches (millimeters).
B. This drawing is subject to change without notice.
C. Falls within JEDEC MS–001, except 18 and 20 pin minimum body length (Dim A).
D. The 20 pin end lead shoulder width is a vendor option, either half or full width.

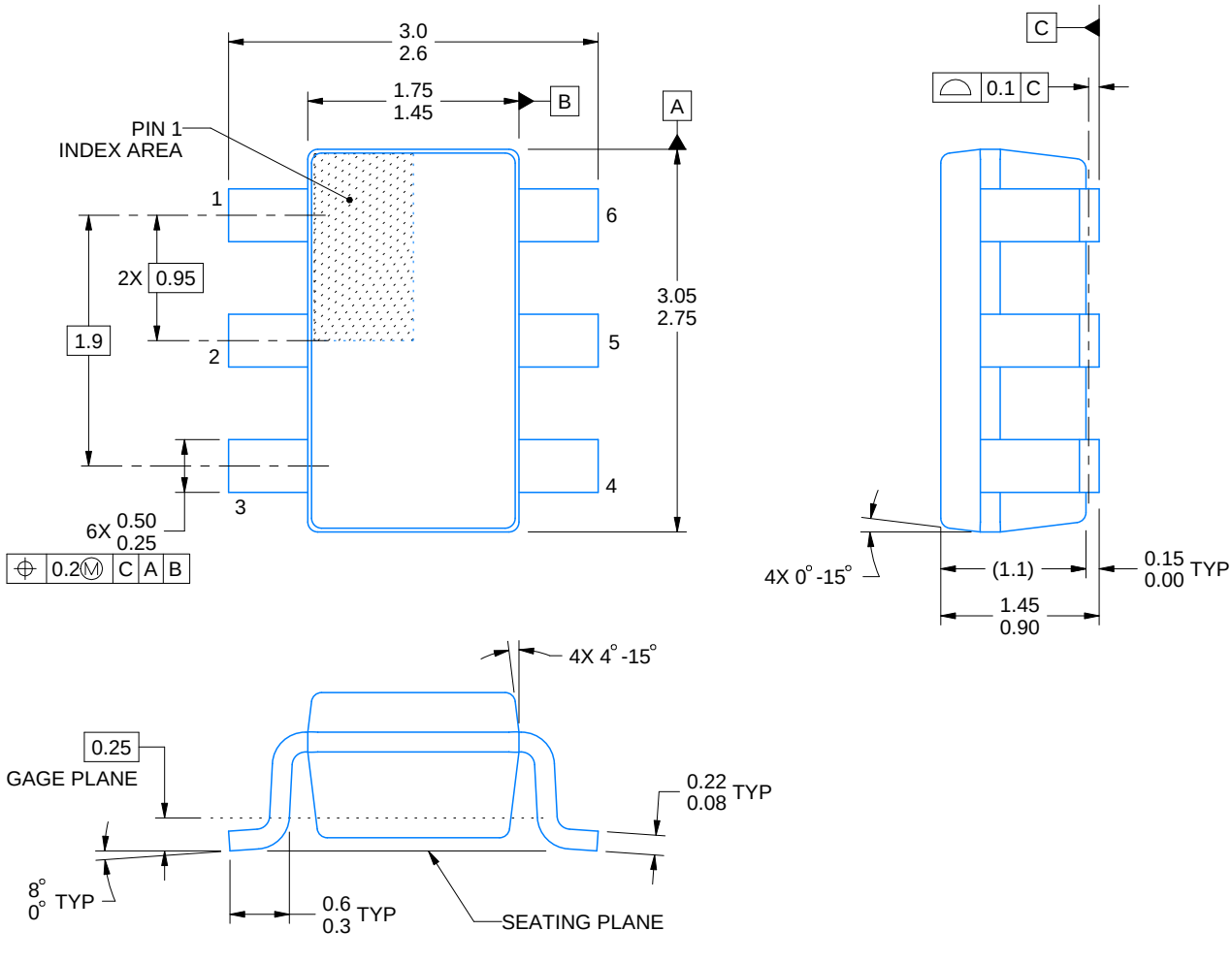

4214840/G 08/2024

NOTES:

1. All linear dimensions are in millimeters. Any dimensions in parenthesis are for reference only. Dimensioning and tolerancing per ASME Y14.5M.
2. This drawing is subject to change without notice.
3. Body dimensions do not include mold flash or protrusion. Mold flash and protrusion shall not exceed 0.25 per side.
4. Leads 1,2,3 may be wider than leads 4,5,6 for package orientation.
5. Refernce JEDEC MO-178.

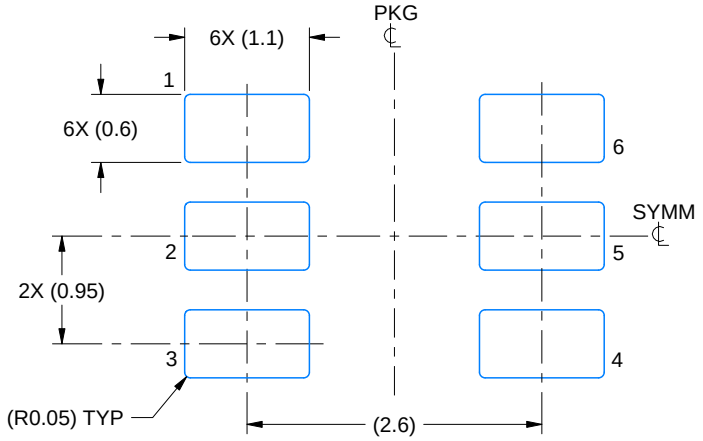

LAND PATTERN EXAMPLE
EXPOSED METAL SHOWN
SCALE:15X

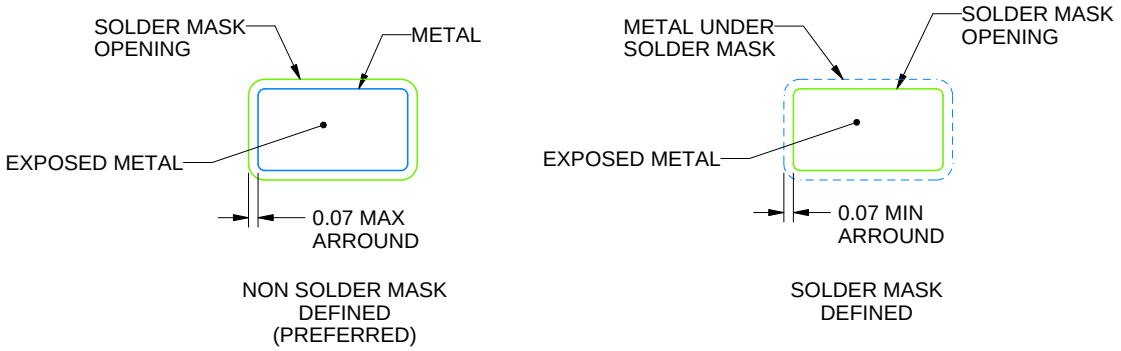

SOLDER MASK DETAILS

4214840/G 08/2024

NOTES: (continued)

6. Publication IPC-7351 may have alternate designs.
7. Solder mask tolerances between and around signal pads can vary based on board fabrication site.

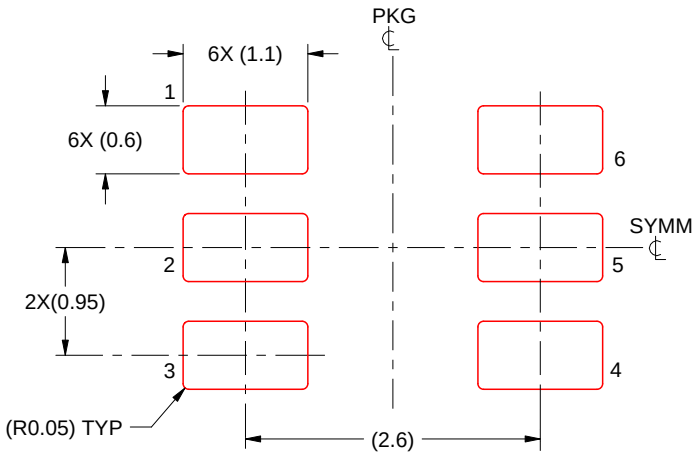

SOLDER PASTE EXAMPLE
BASED ON 0.125 mm THICK STENCIL
SCALE:15X

4214840/G 08/2024

NOTES: (continued)

8. Laser cutting apertures with trapezoidal walls and rounded corners may offer better paste release. IPC-7525 may have alternate design recommendations.
9. Board assembly site may have different recommendations for stencil design.

PW0014A

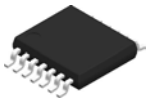

PACKAGE OUTLINE

TSSOP - 1.2 mm max height

SMALL OUTLINE PACKAGE

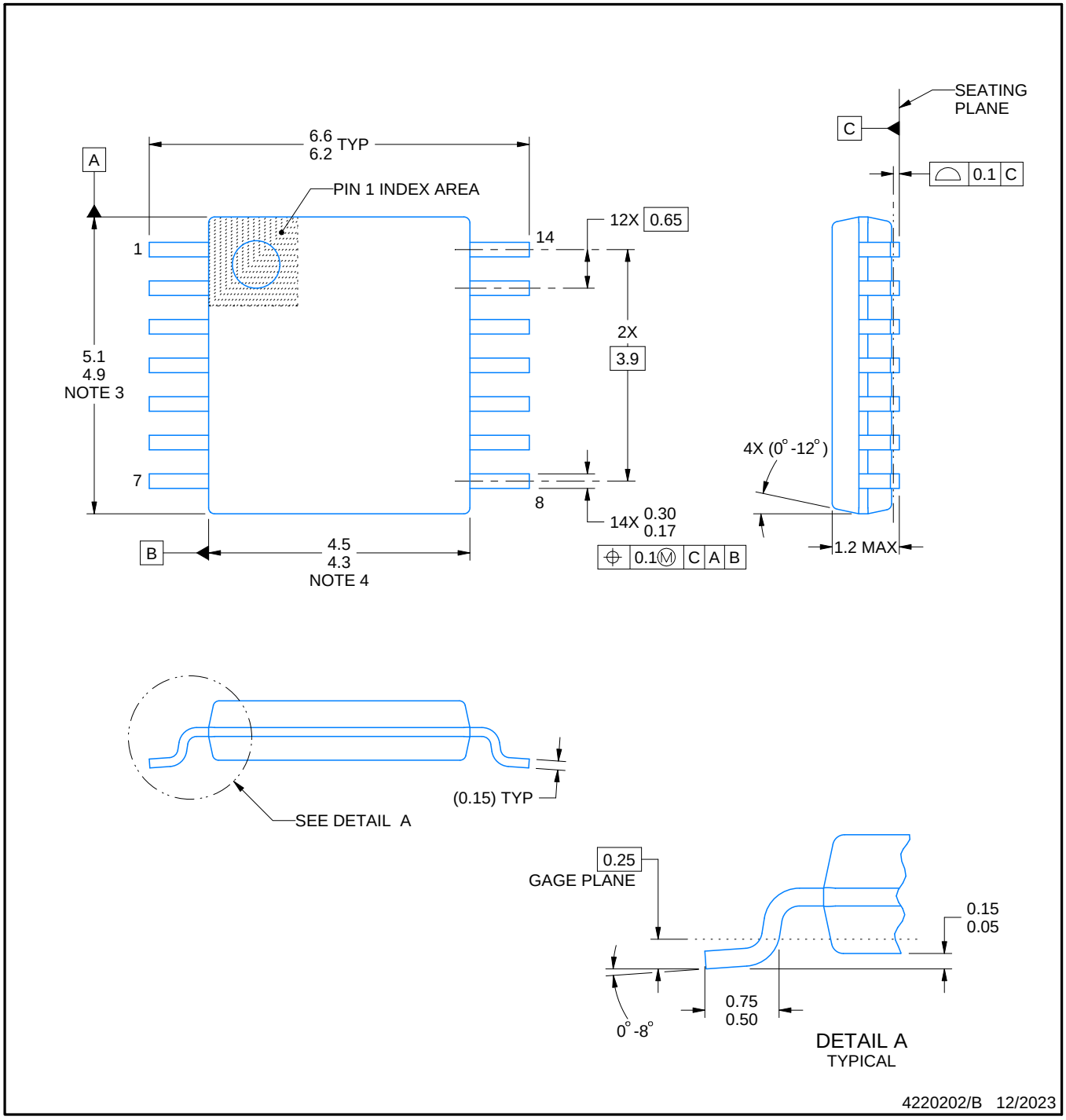

NOTES:

1. All linear dimensions are in millimeters. Any dimensions in parenthesis are for reference only. Dimensioning and tolerancing per ASME Y14.5M.
2. This drawing is subject to change without notice.
3. This dimension does not include mold flash, protrusions, or gate burrs. Mold flash, protrusions, or gate burrs shall not exceed 0.15 mm per side.
4. This dimension does not include interlead flash. Interlead flash shall not exceed 0.25 mm per side.
5. Reference JEDEC registration MO-153.

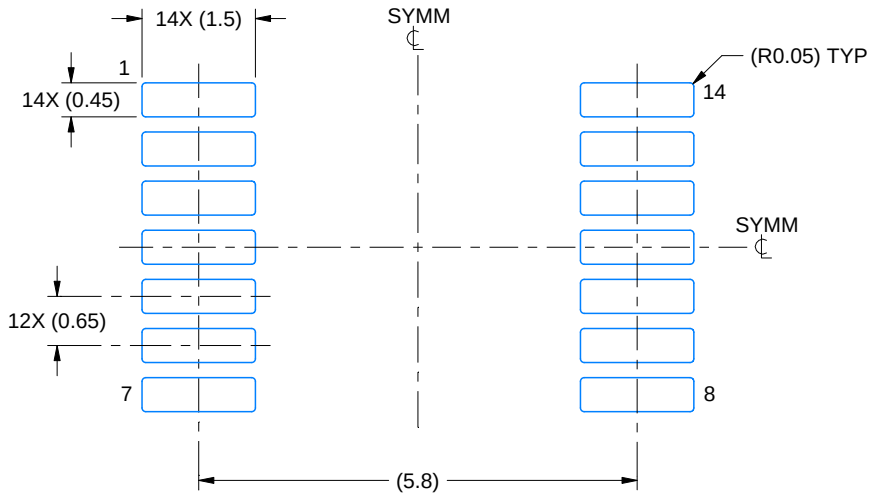

LAND PATTERN EXAMPLE
EXPOSED METAL SHOWN
SCALE: 10X

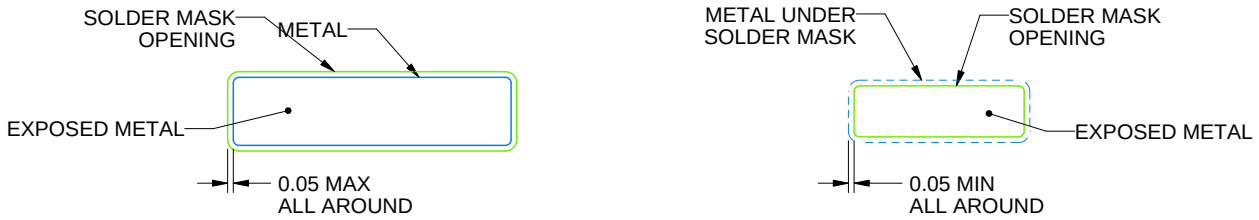

NON-SOLDER MASK DEFINED (PREFERRED)

SOLDER MASK DEFINED

SOLDER MASK DETAILS

4220202/B 12/2023

NOTES: (continued)

6. Publication IPC-7351 may have alternate designs.
7. Solder mask tolerances between and around signal pads can vary based on board fabrication site.

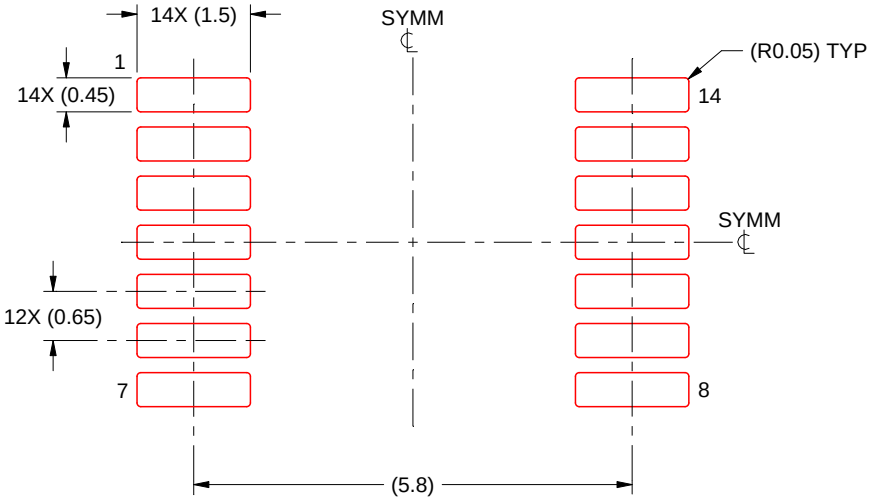

SOLDER PASTE EXAMPLE
BASED ON 0.125 mm THICK STENCIL
SCALE: 10X

4220202/B 12/2023

NOTES: (continued)

8. Laser cutting apertures with trapezoidal walls and rounded corners may offer better paste release. IPC-7525 may have alternate design recommendations.
9. Board assembly site may have different recommendations for stencil design.

IMPORTANT NOTICE AND DISCLAIMER

TI PROVIDES TECHNICAL AND RELIABILITY DATA (INCLUDING DATA SHEETS), DESIGN RESOURCES (INCLUDING REFERENCE DESIGNS), APPLICATION OR OTHER DESIGN ADVICE, WEB TOOLS, SAFETY INFORMATION, AND OTHER RESOURCES “AS IS” AND WITH ALL FAULTS, AND DISCLAIMS ALL WARRANTIES, EXPRESS AND IMPLIED, INCLUDING WITHOUT LIMITATION ANY IMPLIED WARRANTIES OF MERCHANTABILITY, FITNESS FOR A PARTICULAR PURPOSE OR NON-INFRINGEMENT OF THIRD PARTY INTELLECTUAL PROPERTY RIGHTS.

These resources are intended for skilled developers designing with TI products. You are solely responsible for (1) selecting the appropriate TI products for your application, (2) designing, validating and testing your application, and (3) ensuring your application meets applicable standards, and any other safety, security, regulatory or other requirements.

These resources are subject to change without notice. TI grants you permission to use these resources only for development of an application that uses the TI products described in the resource. Other reproduction and display of these resources is prohibited. No license is granted to any other TI intellectual property right or to any third party intellectual property right. TI disclaims responsibility for, and you will fully indemnify TI and its representatives against, any claims, damages, costs, losses, and liabilities arising out of your use of these resources.

TI’s products are provided subject to TI’s Terms of Sale or other applicable terms available either on ti.com or provided in conjunction with such TI products. TI’s provision of these resources does not expand or otherwise alter TI’s applicable warranties or warranty disclaimers for TI products.

TI objects to and rejects any additional or different terms you may have proposed.

Mailing Address: Texas Instruments, Post Office Box 655303, Dallas, Texas 75265
Copyright © 2025, Texas Instruments Incorporated