RoHS Compliance

Product Dimensions

V2.0

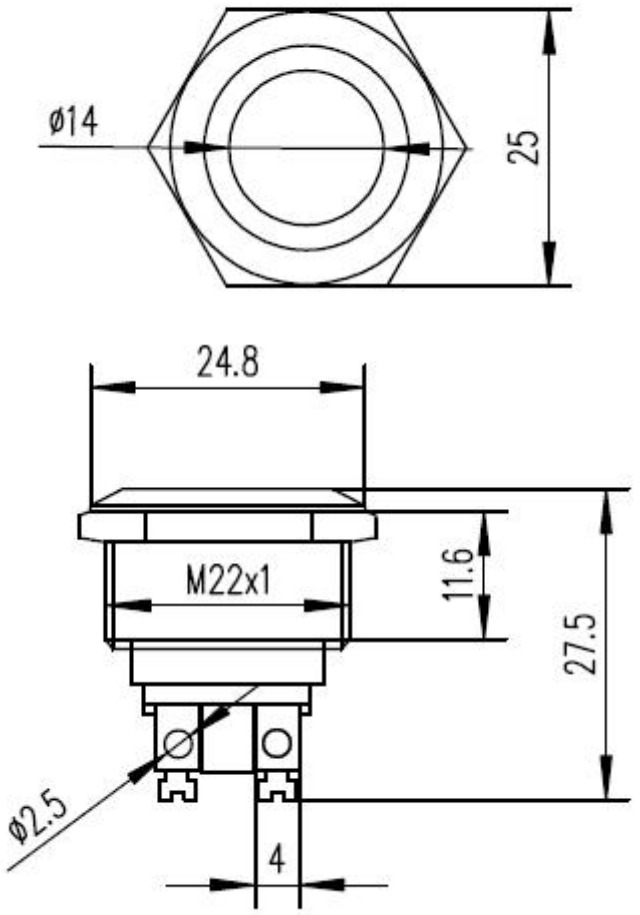

Main Technical Parameters

Product Color: Red / Yellow / Green / Blue / White
Rated Voltage:6V/12V/24V/36V/48V/110V/220V/230V
Mounting Hole Diameter: 22mm
Head Style: Raised Head / Flat Head / Ball Head
Actuation Type: Momentary
Housing Material: Nickel-Plated Brass / Stainless Steel
Contact Material: Silver Contact
Termination Type: Screw Terminal

Description:	LED Indicator Light
Part Number:	SW-SL22DG12-S-L-CT
Manufacturer:	CONNTHERM