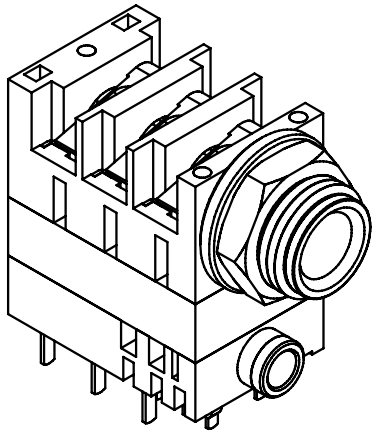

ISO VIEW

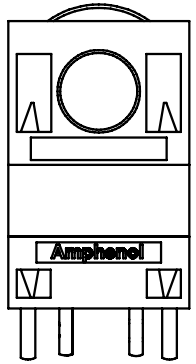

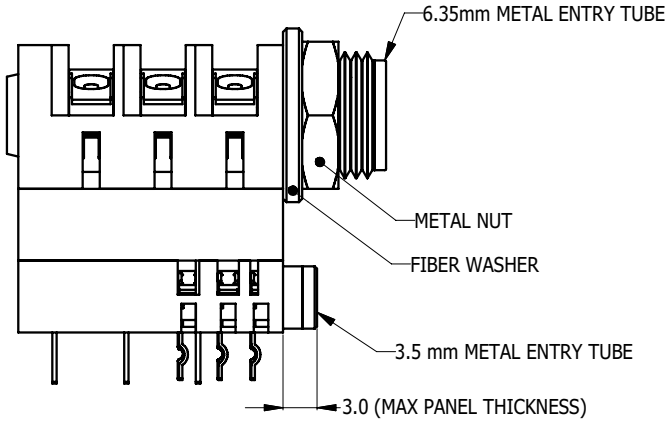

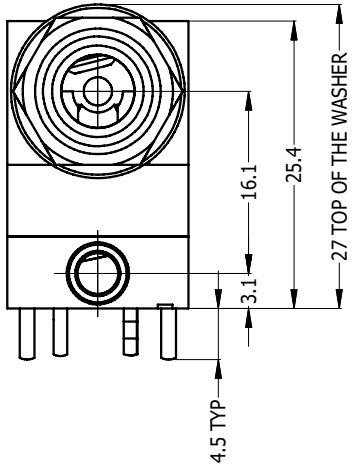

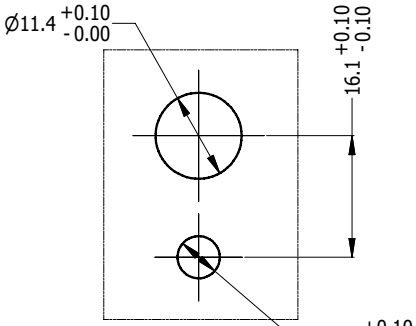

PANEL CUTOUT

(SCALE 1:1)

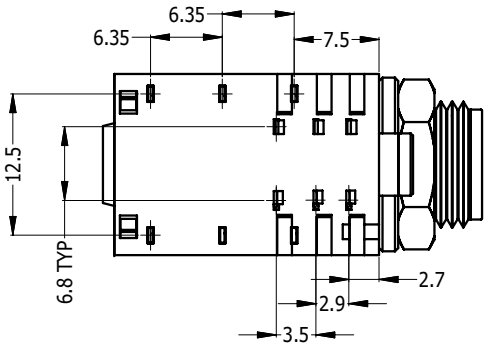

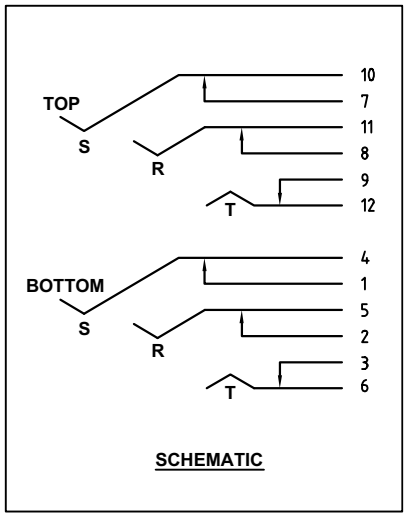

SCHEMATIC

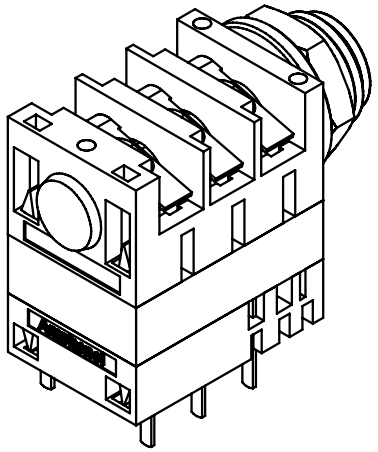

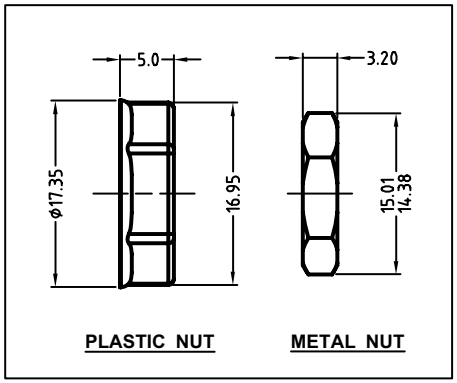

PLASTIC NUT METAL NUT

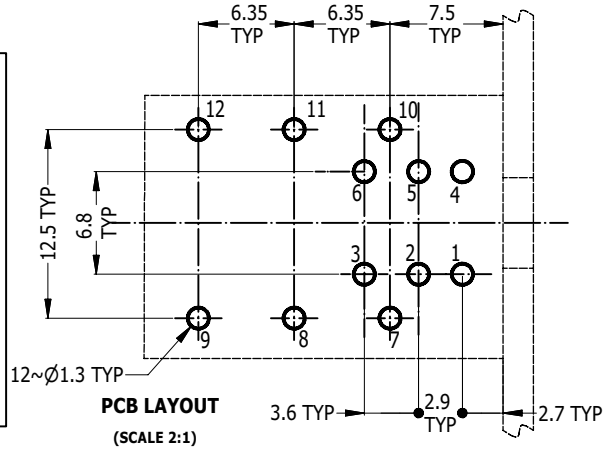

PCB LAYOUT

(SCALE 2:1)

REV	DESCRIPTION	BY	DATE	CHG NOTE
0	FIRST ISSUED	M.H	09/02/09	8798
1	*CORRECT PCB PROFILE FROM STRAIGHT TO RETAINER STYLE, REF LOCATION 4D*	M.H	24/01/2011	8978

PART NUMBER	DESCRIPTION
ACJS-MHD985	3.5mm & 1/4" STEREO PHONE DUAL JACK - METAL NUT
ACJS-PHD985	3.5mm & 1/4" STEREO PHONE DUAL JACK - PLASTIC NUT
ACJM-MHD985	3.5mm & 1/4" MONO PHONE DUAL JACK - METAL NUT
ACJM-PHD985	3.5mm & 1/4" MONO PHONE DUAL JACK - PLASTIC NUT

UNLESS OTHERWISE SPECIFIED TOLERANCE TO BE

LINEAR	ANGULAR
X ± 0.5	X' ± 1
X,X ± 0.25	X.X' ± 30'
X,XX ± 0.10	X.X'X " ± 15'

BREAK ALL SHARP EDGES AND REMOVE ALL BURRS

DO NOT SCALE

DIMENSIONS IN MILIMETRES

THIRD ANGLE PROJECTION

THIS DOCUMENT IS THE PROPERTY OF AMPHENOL AUSTRALIA PTY. LTD. . NO PART THEREOF MAY BE REPRODUCED AND USED WITHOUT THE PRIOR WRTTEN CONSENT OF THE OWNER

CAD FILE: 55010386000110 DRN: T.N DATE: 28/09/06

MATL: REFER TO COMPONENT CKD: M.H DATE: 24/01/11

FINISH: REFER TO COMPONENT APP'D: P.M DATE: 24/01/11

SCALE: 3:2 PART No: SEE TABLE SIZE: A4

TITLE: 6.35mm & 3.5mm HORIZONTAL DUAL JACK

Amphenol

Amphenol Australia Pty.Ltd, 2 Fiveways Blvd, Keysborough, Vic3173

DRAWING NO. 55010386-001-1 SHEET 1/1