REV	SYM	Revision Record	Appr.	Date
V0		New Version Release	Song	2026-04-14

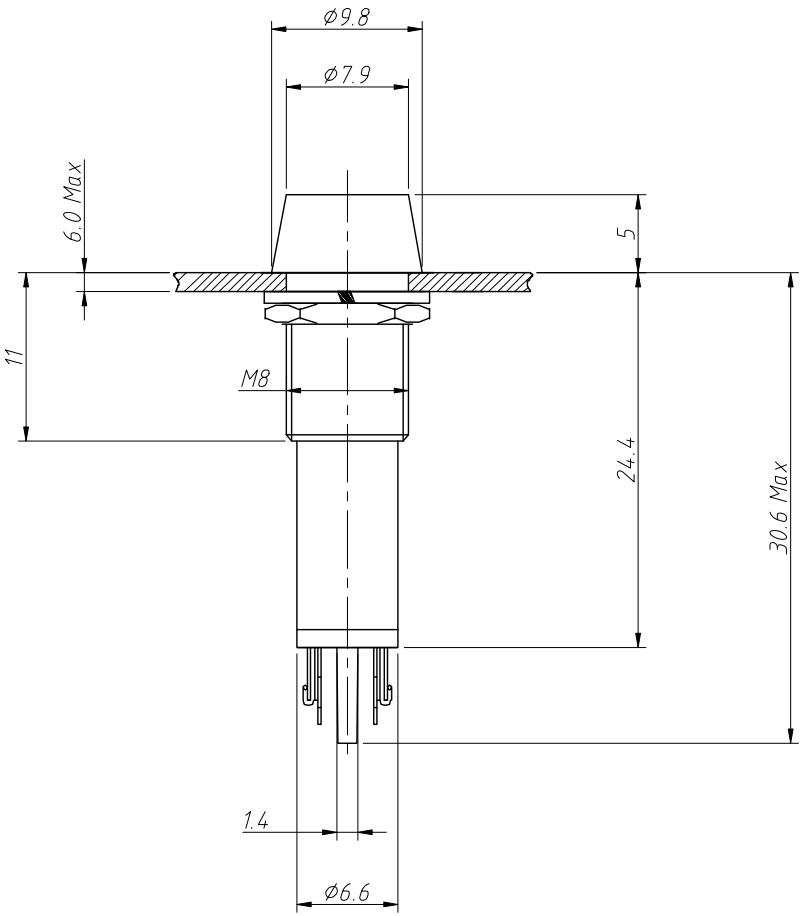

Notes:
1.LED:Green/Red /Yellow/Blue
2.Voltage: 3V/12V/24V

ANGLE TOLERANCE	PROJECTION		Description:	Indicator Light
±3°				
GENERAL TOLERANCE	UNITS	mm	P/N:	SW-SL8Y12C-S-J-CT
x.x ±0.30	SHEET SIZE	A4		CONNTHERM
x.xx ±0.20	Draw:	Song	2026-04-14	
x.xxx ±0.10	Check:	Daniel	2026-04-14	