REVISIONS					
REV	ECO	DESCRIPTION	DATE	BY	APPR
B1	-	RELEASED DRAWING	JAN-18-2014	ARROW	TOMMY

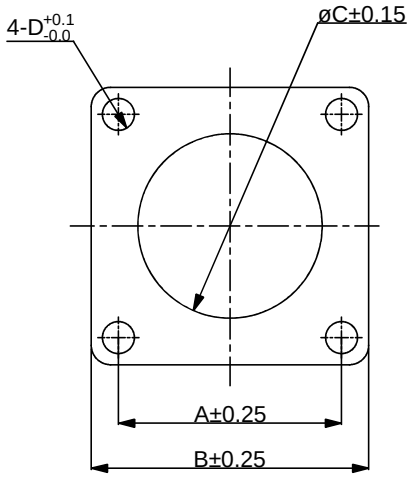

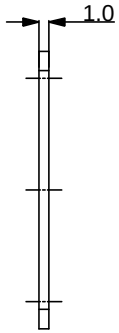

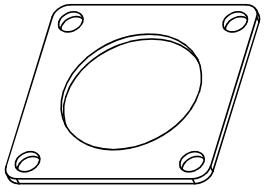

NOTES:
1.MATERIAL : EPDM(BLACK).
2.SEALING FOR WALL MOUNTING RECEPTACLES.
3.SUITABLE FOR RTG-RT0-RT0W.

PART NO:	SHELL	A	B	C	D
RTFD10B	10	18.3	23.8	15.9	3.3
RTFD12B	12	20.6	26.2	19.0	3.3
RTFD14B	14	23.0	28.6	22.2	3.3
RTFD16B	16	24.6	31.0	25.4	3.3
RTFD18B	18	27.0	33.3	28.6	3.3
RTFD20B	20	29.4	36.5	31.8	4.3
RTFD24B	24	34.9	42.5	38.2	4.3

QUANTITY	PART NUMBER	DESCRIPTION	ITEM

MATERIALS LIST

UNLESS OTHERWISE SPECIFIED
1) All dimensions are in metric(mm).
2) Tolerances are as follows:
1 PL DEC ±0.30
2 PL DEC ±0.15
3 PL DEC ±0.08
Fractions ±1/64
Angles ±1°
3) Note reference = X

MATERIAL SPECIFICATIONS:

PROCESS SPECIFICATIONS:

NEXT ASS'Y:

SIGNATURES		DATE
DRAWN:	ARROW	JAN-17-2014
CHECKED:		
ENGINEER:		
APPROVAL:		
CUSTOMER:		

THIS DRAWING IS SUPPLIED FOR INFORMATION ONLY. DESIGN FEATURES, SPECIFICATIONS AND PERFORMANCE DATA SHOWN HEREON ARE THE PROPERTY OF THE AMPHENOL CORPORATION. NO RIGHTS OF REPRODUCTION ARE IMPLIED. ALL DIMENSIONS ARE SUBJECT TO NORMAL MANUFACTURING VARIATIONS.

Amphenol
Sine Systems - www.amphenol-sine.com
44724 Morley Drive
Clinton Township, MI 48036

ECO-MATE,GASKET
RT 360 SERIES

SIZE B | TYPE C- | DWG NO: RTFDxxB | REVISION B1

SCALE: NONE | SHEET 1 OF 1

TITLE: ECO-MATE,GASKET, RT 360 SERIES
DWG NO: RTFDxxB
REV: B1
SH: 1
OF: 1