REVISIONS					
REV	ECO	DESCRIPTION	DATE	BY	APPR
A1	--	RELEASED DRAWING	Jun-20-2018	Blink	Tommy

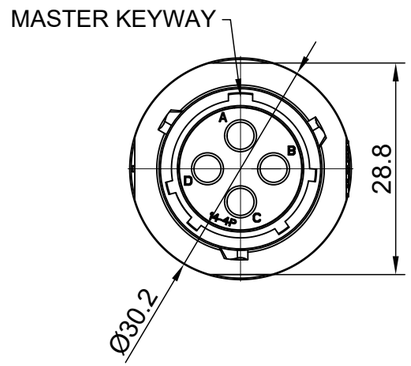

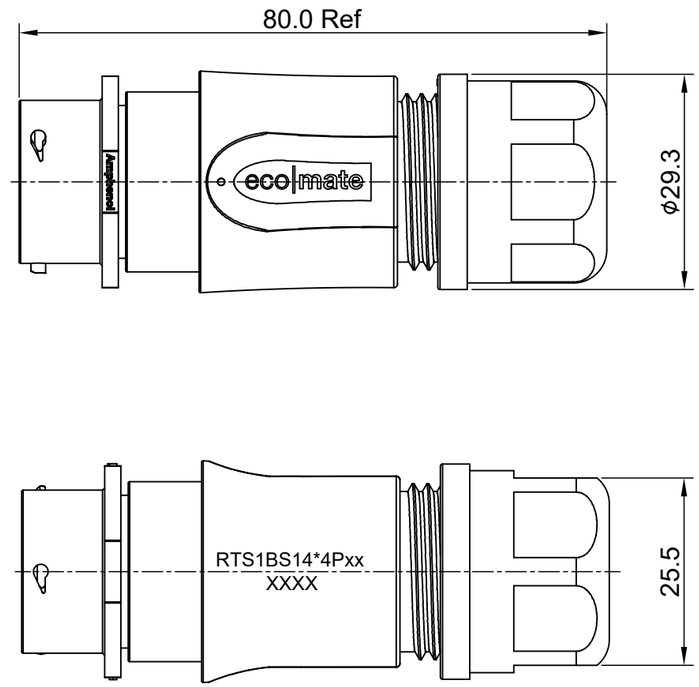

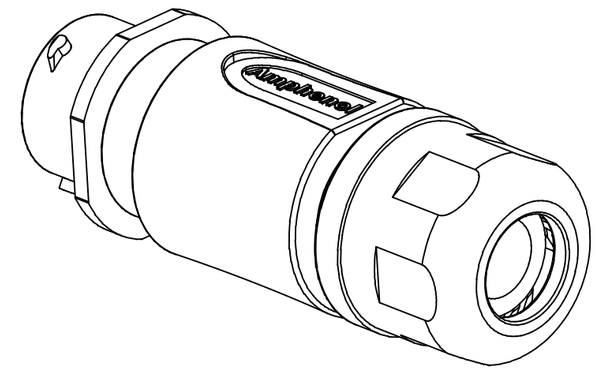

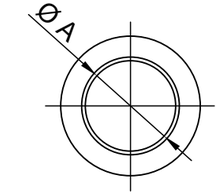

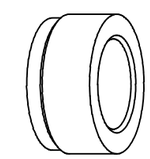

NOTES: (UNLESS OTHERWISE SPECIFIED)

1. MATERIAL:
   - 1.1 SHELL: THERMOPLASTIC, UL94 V-0.
   - 1.2 INSERT: THERMOPLASTIC, UL94 V-0.
   - 1.3 O-RING: NBR/SILICONE RUBBER.
   - 1.4 BACK SHELL: THERMOPLASTIC, UL94 V-0.
   - 1.5 CLAMP NUT: THERMOPLASTIC, UL94 V-0.
   - 1.6 CLAMP RING: THERMOPLASTIC, UL94 V-0.
   - 1.7 CABLE SEAL: EPDM.
2. SPECIFICATIONS:
   - 2.1 RATED CURRENT: 23A (MAX).
   - 2.2 RATED VOLTAGE: 500V(AC/DC).
   - 2.3 OPERATING TEMPERATURE: SEE TABLE .
   - 2.4 DIELECTRIC WITHSTANDING VOLTAGE: LESS THAN 2 MILLIAMPS CURRENT LEAKAGE@2000 VOLTS AC.
   - 2.5 INSULATION RESISTANCE: 5000 MEGOHMS MIN.
   - 2.6 IP CLASS: IP67 AND IP69K IN THE MATED CONDITION.
   - 2.7 MATING CYCLES DURABILITY: 500 CYCLES MIN.
   - 2.8 RoHS COMPLIANT.
3. SUITABLE CONTACTS : 2.5MM CONTACT.
4. ALL DIMENSIONS ARE FOR REFERENCE USE ONLY.
5. ADD LOCTITE TO RETAIN BACKSHELL DURING UN-MATING AND TO PROVIDE ADDITIONAL PROTECTION AGAINST VIBRATION.

DIMENSION ϕA	CABLE OD RANGE
12.3MM	6.0-12.0mm
14.3MM	9.0-14.0mm

KEY	PART NUMBER	
	-40°C ~ 105°C	-40°C ~ 125°C
N	RTS1BS14N4P	RTS1BS14N4P03

QUANTITY	PART NUMBER	DESCRIPTION	ITEM

MATERIALS LIST

UNLESS OTHERWISE SPECIFIED
1) All dimensions are in metric(mm).
2) Tolerances are as follows:
1 PL DEC ±0.30 | Fractions ±1/64
2 PL DEC ±0.15 | Angles ±1°
3 PL DEC ±0.08
3) Note reference = X

MATERIAL SPECIFICATIONS:

PROCESS SPECIFICATIONS:

NEXT ASS'Y:

SIGNATURES		DATE
DRAWN:	Blink	Jun-20-2018
CHECKED:	Tod	Jun-20-2018
ENGINEER:		
APPROVAL:	Tommy	Jun-20-2018
CUSTOMER:		

THIS DRAWING IS SUPPLIED FOR INFORMATION ONLY. DESIGN FEATURES, SPECIFICATIONS AND PERFORMANCE DATA SHOWN HEREON ARE THE PROPERTY OF THE AMPHENOL CORPORATION. NO RIGHTS OF REPRODUCTION ARE IMPLIED. ALL DIMENSIONS ARE SUBJECT TO NORMAL MANUFACTURING VARIATIONS.

Amphenol
Sine Systems - www.amphenol-sine.com
44724 Morley Drive
Clinton Township, MI 48036

ECO-MATE,RECPTACLE,BACK SHELL, SIZE 14,4 POS ,PIN

SIZE	TYPE	DWG NO:	REVISION
B	C-	RTS1BS14*4Pxx	A1

SCALE: NONE SHEET 1 OF 1

TITLE: ECO-MATE,RECPTACLE,BACK SHELL,SIZE 14, 4POS,PIN
DWG NO: RTS1BS14*4Pxx
REV: A1
SH: 1
OF: 1

ecomate® RM/RSSM/Aquarius™ - Contact Size 12 Options

Crimp Contacts, Machined				
Part Number		AWG	Wire Range (mm²)	Plating
Male	Female			
N/A				

Crimp Contacts, Stamped & Formed				
Part Number		AWG	Wire Range (mm²)	Plating
Male	Female			
SP12A1T	SS12A1T	14-12	2.5-3.5	Tin

Tooling, Machined	
Part Number	Description
N/A	N/A
N/A	N/A

Tooling, Stamped & Formed	
Part Number	Description
QXRT12S	Contact Extraction Tool, 2.5mm Contact
MFX-3962	Hand Tool, Stamped & Formed Contact, 2.5mm Contact

Plating Options, All	
Symbol	Plating
N/A	N/A

Misc Tooling, All	
Part Number	Description
CA-4012-59	Sealing Plug, Size 12

Standard Quantity Order Options	
Machined	Stamped & Formed
N/A	Reel, 1000 Pieces