LEGEND ◊ = KEY PRODUCT CHARACTERRISTICS

REV	DESCRIPTION	DATE	BY	CHG/No
0	FIRST ISSUE	02-05-07	MH	---
1	UPDATED DRAWING TO CURRENT PRODUCTION	24-01-24	MH	9730

Amphenol Australia RoHS Compliant Product

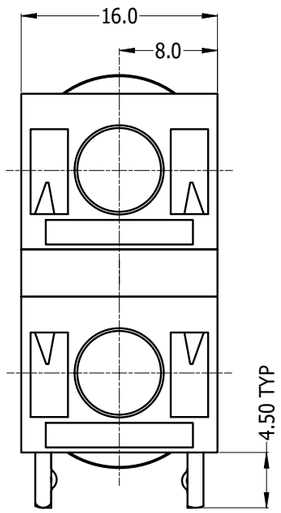

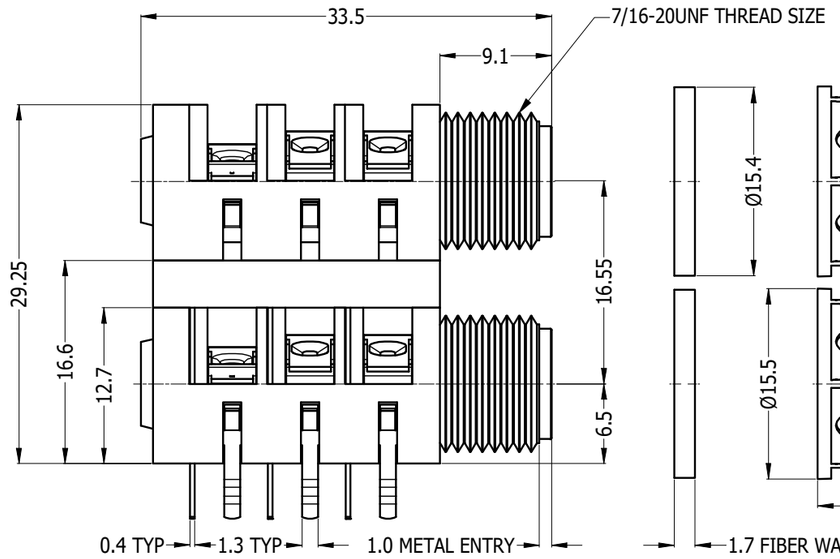

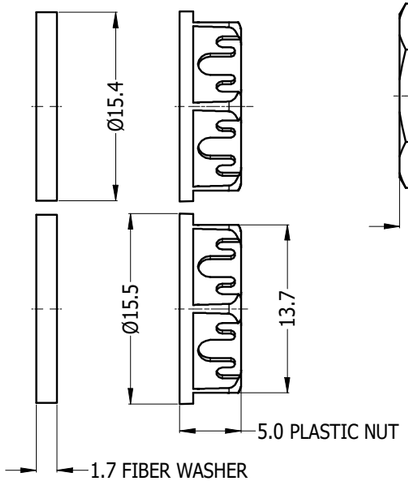

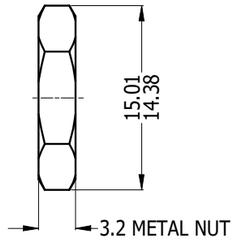

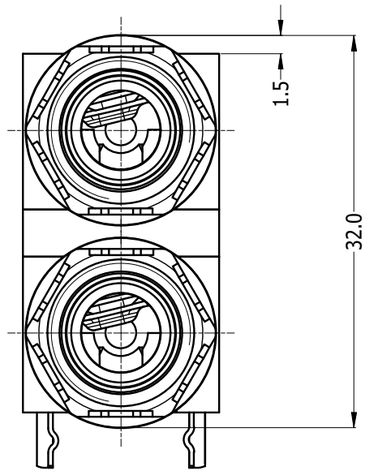

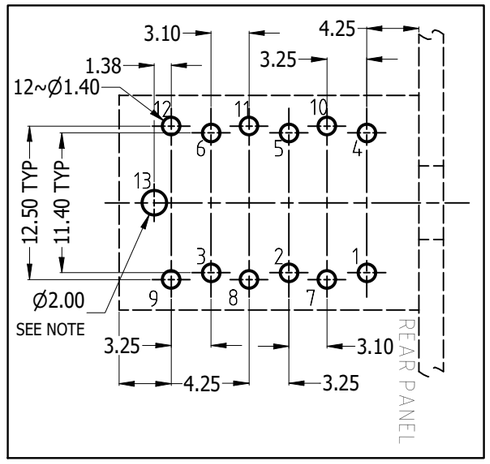

PCB LAYOUT
(CONNECTOR SIDE)

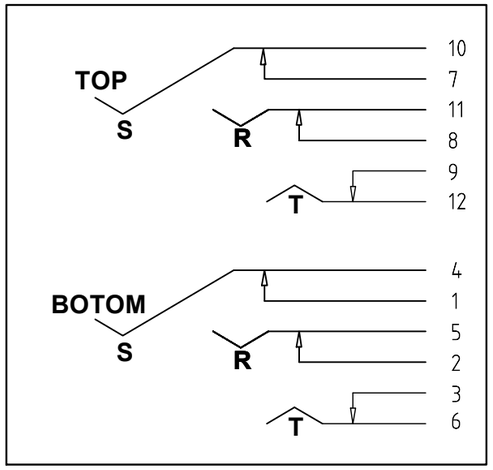

SCHEMATIC DIAGRAM

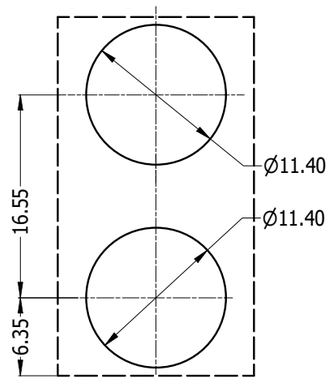

PANEL CUTOUT

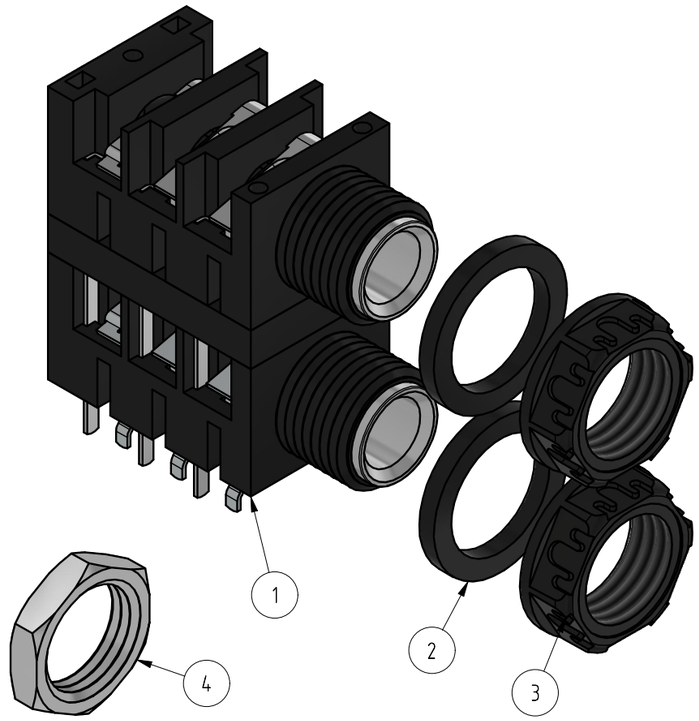

ITEM	PART NUMBER	DESCRIPTION	QTY
4	52170017-331	1/4" PHONE JACK METAL NUT Ni PLATED	2
3	52170031-531	1/4" PHONE JACK PLASTIC NUT BLACK	2
2	52770001-901	1/4" PHONE JACK FIBER WASHER BLACK	2
1	ACJS-LHDC	1/4" PHONE JACK STEREO ASSY - WITHOUT NUT & WASHER	1

Parts List

PART NUMBER	HARDWARE
ACJS-PHDC	PLASTIC NUT & WASHER
ACJS-MHDC	METAL NUT & WASHER
ACJS-LHDC	WITHOUT NUT & WASHER

NOTE: - OPTIONAL MOUNTING HOLE FOR SELF-TAPPING M2 SCREW

UNLESS OTHERWISE SPECIFIED TOLERANCE TO BE

LINEAR	ANGULAR
X ±0.5	X ±1
X.X ±0.2	X.X' ± 30'
X.XX ±0.1	X.X'X" ± 15'

BREAK ALL SHARP EDGES AND REMOVE ALL BURRS

DO NOT SCALE

DIMENSIONS IN MILIMETRES

THIRD ANGLE PROJECTION

THIS DOCUMENT IS THE PROPERTY OF AMPHENOL AUSTRALIA PTY. LTD. . NO PART THEREOF MAY BE REPRODUCED AND USED WITHOUT THE PRIOR WRITTEN CONSENT OF THE OWNER

MATERIAL: REFER TO COMPONENTS
FINISH: REFER TO COMPONENTS

DRN:	MH	DATE: 02-05-07
CKD:	M.H	DATE: 25-01-24
APP'D:	P.M	DATE: 25-01-24
SCALE:	3:1	SIZE: A3

Amphenol
Amphenol Australia Pty.Ltd,
22 Industry Blvd, Carrum Downs, VIC 3201

TITLE: **1/4" STEREO DUAL JACK CUSTOMER DRAWING**

CAD FILE: 55010377000111

PART No: **SEE TABLE**

DRAWING NO. **55010377-000-1**

SHEET **1/1**