SmartFusion Customizable System-on-Chip (cSoC)

Microcontroller Subsystem (MSS)

- Hard 100 MHz 32-Bit ARM® Cortex™-M3
  - 1.25 DMIPS/MHz Throughput from Zero Wait State Memory
  - Memory Protection Unit (MPU)
  - Single Cycle Multiplication, Hardware Divide
  - JTAG Debug (4 wires), Serial Wire Debug (SWD, 2 wires), and Single Wire Viewer (SWV) Interfaces
- Internal Memory
  - Embedded Nonvolatile Flash Memory (eNVM), 128 Kbytes to 512 Kbytes
  - Embedded High-Speed SRAM (eSRAM), 16 Kbytes to 64 Kbytes, Implemented in 2 Physical Blocks to Enable Simultaneous Access from 2 Different Masters
- Multi-Layer AHB Communications Matrix
  - Provides up to 16 Gbps of On-Chip Memory Bandwidth,[1] Allowing Multi-Master Schemes
- 10/100 Ethernet MAC with RMII Interface[2]
- Programmable External Memory Controller, Which Supports:
  - Asynchronous Memories
  - NOR Flash, SRAM, PSRAM
  - Synchronous SRAMs
- Two I^2C Peripherals
- Two 16550 Compatible UARTs
- Two SPI Peripherals
- Two 32-Bit Timers
- 32-Bit Watchdog Timer
- 8-Channel DMA Controller to Offload the Cortex-M3 from Data Transactions
- Clock Sources
  - 32 KHz to 20 MHz Main Oscillator
  - Battery-Backed 32 KHz Low Power Oscillator with Real-Time Counter (RTC)
  - 100 MHz Embedded RC Oscillator; 1% Accurate
  - Embedded Analog PLL with 4 Output Phases (0, 90, 180, 270)

High-Performance FPGA

- Based on proven ProASIC®3 FPGA Fabric
- Low Power, Firm-Error Immune 130-nm, 7-Layer Metal, Flash-Based CMOS Process
- Nonvolatile, Instant On, Retains Program When Powered Off
- 350 MHz System Performance
- Embedded SRAMs and FIFOs
  - Variable Aspect Ratio 4,608-Bit SRAM Blocks
  - x1, x2, x4, x9, and x18 Organizations
  - True Dual-Port SRAM (excluding x18)
  - Programmable Embedded FIFO Control Logic
- Secure ISP with 128-Bit AES via JTAG
- FlashLock® to Secure FPGA Contents
- Five Clock Conditioning Circuits (CCCs) with up to 2 Integrated Analog PLLs
  - Phase Shift, Multiply/Divide, and Delay Capabilities
  - Frequency: Input 1.5–350 MHz, Output 0.75 to 350 MHz

Programmable Analog

Analog Front-End (AFE)

- Up to Three 12-Bit SAR ADCs
  - 500 Ksps in 12-Bit Mode
  - 550 Ksps in 10-Bit Mode
  - 600 Ksps in 8-Bit Mode
- Internal 2.56 V Reference or Optional External Reference
- One First-Order ΣΔ DAC (sigma-delta) per ADC
  - 8-Bit, 16-Bit, or 24-Bit 500 Ksps Update Rate
- Up to 5 High-Performance Analog Signal Conditioning Blocks (SCB) per Device, Each Including:
  - Two High-Voltage Bipolar Voltage Monitors (with 4 input ranges from ±2.5 V to –11.5/+14 V) with 1% Accuracy
  - High Gain Current Monitor, Differential Gain = 50, up to 14 V Common Mode
  - Temperature Monitor (Resolution = ¼°C in 12-Bit Mode; Accurate from –55°C to 150°C)
- Up to Ten High-Speed Voltage Comparators (t_{pd} = 15 ns)

Analog Compute Engine (ACE)

- Offloads Cortex-M3–Based MSS from Analog Initialization and Processing of ADC, DAC, and SCBs
- Sample Sequence Engine for ADC and DAC Parameter Set-Up
- Post-Processing Engine for Functions such as Low-Pass Filtering and Linear Transformation
- Easily Configured via GUI in Libero® System-on-Chip (SoC) Software

I/Os and Operating Voltage

- FPGA I/Os
  - LVDS, PCI, PCI-X, up to 24 mA IOH/IOL
  - Up to 350 MHz
- MSS I/Os
  - Schmitt Trigger, up to 6 mA IOH, 8 mA IOL
  - Up to 180 MHz
- Single 3.3 V Power Supply with On-Chip 1.5 V Regulator
- External 1.5 V Is Allowed by Bypassing Regulator (digital VCC = 1.5 V for FPGA and MSS, analog VCC = 3.3 V and 1.5 V)

1 Theoretical maximum
2 A2F200 and larger devices

© 2013 Microsemi Corporation

SmartFusion cSoC Family Product Table

FPGA Fabric	A2F060			A2F200				A2F500			
	TQ144	CS288	FG256	PQ208	CS288	FG256	FG484	PQ208	CS288	FG256	FG484
System Gates	60,000			200,000				500,000			
Tiles (D-flip-flops)	1,536			4,608				11,520			
RAM Blocks (4,608 bits)	8			8				24			
Microcontroller Subsystem (MSS)	**A2F060**			**A2F200**				**A2F500**			
	TQ144	CS288	FG256	PQ208	CS288	FG256	FG484	PQ208	CS288	FG256	FG484
Flash (Kbytes)	128			256				512			
SRAM (Kbytes)	16			64				64			
Cortex-M3 processor with MPU	Yes			Yes				Yes			
10/100 Ethernet MAC	No			Yes				Yes			
External Memory Controller (EMC)	–	26-/16-bit address/data		26-bit address,16-bit data				–	26-/16-bit address/data		
DMA	8 Ch			8 Ch				8 Ch			
I^2C	2			2				2			
SPI	1	2		1	2			1	2		
16550 UART	2			2				2			
32-Bit Timer	2			2				2			
PLL	1			1				1	2	1	2
32 KHz Low Power Oscillator	1			1				1			
100 MHz On-Chip RC Oscillator	1			1				1			
Main Oscillator (32 KHz to 20 MHz)	1			1				1			
Programmable Analog	**A2F060**			**A2F200**				**A2F500**			
	TQ144	CS288	FG256	PQ208	CS288	FG256	FG484	PQ208	CS288	FG256	FG484
ADCs (8-/10-/12-bit SAR)	1			2				2			3
DACs (8-/16-/24-bit sigma-delta)	1			2				2			3
Signal Conditioning Blocks (SCBs)	1			4				4			5
Comparator*	2			8				8			10
Current Monitors*	1			4				4			5
Temperature Monitors*	1			4				4			5
Bipolar High Voltage Monitors*	2			8				8			10

*Note: *These functions share I/O pins and may not all be available at the same time. See the "Analog Front-End Overview" section in the SmartFusion Programmable Analog User's Guide for details.*

Package I/Os: MSS + FPGA I/Os

Device	A2F060[1]			A2F200[2]				A2F500[2]			
Package	**TQ144**	**CS288**	**FG256**	**PQ208**	**CS288**	**FG256**	**FG484**	**PQ208**	**CS288**	**FG256**	**FG484**
Direct Analog Inputs	11	11	11	8	8	8	8	8	8	8	12
Shared Analog Inputs	4	4	4	16	16	16	16	16	16	16	20
Total Analog Inputs	15	15	15	24	24	24	24	24	24	24	32
Analog Outputs	1	1	1	1	2	2	2	1	2	2	3
MSS I/Os[3,4]	21[5]	28[5]	26[5]	22	31	25	41	22	31	25	41
FPGA I/Os	33[6]	68	66	66	78	66	94	66[6]	78	66	128
Total I/Os	70	112	108	113	135	117	161	113	135	117	204

Notes:

1. *There are no LVTTL capable direct inputs available on A2F060 devices.*
2. *These pins are shared between direct analog inputs to the ADCs and voltage/current/temperature monitors.*
3. *16 MSS I/Os are multiplexed and can be used as FPGA I/Os, if not needed for MSS. These I/Os support Schmitt triggers and support only LVTTL and LVCMOS (1.5 / 1.8 / 2.5, 3.3 V) standards.*
4. *9 MSS I/Os are primarily for 10/100 Ethernet MAC and are also multiplexed and can be used as FPGA I/Os if Ethernet MAC is not used in a design. These I/Os support Schmitt triggers and support only LVTTL and LVCMOS (1.5 / 1.8 / 2.5, 3.3 V standards.*
5. *10/100 Ethernet MAC is not available on A2F060.*
6. *EMC is not available on the A2F500 PQ208 and A2F060 TQ144 package.*

Table 1 • SmartFusion cSoC Package Sizes Dimensions

Package	TQ144	PQ208	CS288	FG256	FG484
Length × Width (mm\mm)	20 × 20	28 × 28		17 × 17	23 × 23
Nominal Area (mm^2)	400	784		289	529
Pitch (mm)	0.5	0.5		1.0	1.0
Height (mm)	1.40	3.40		1.60	2.23

SmartFusion cSoC Device Status

Device	Status
A2F060	Preliminary: CS288, FG256, TQ144
A2F200	Production: CS288, FG256, FG484, PQ208
A2F500	Production: CS288, FG256, FG484, PQ208

SmartFusion cSoC Block Diagram

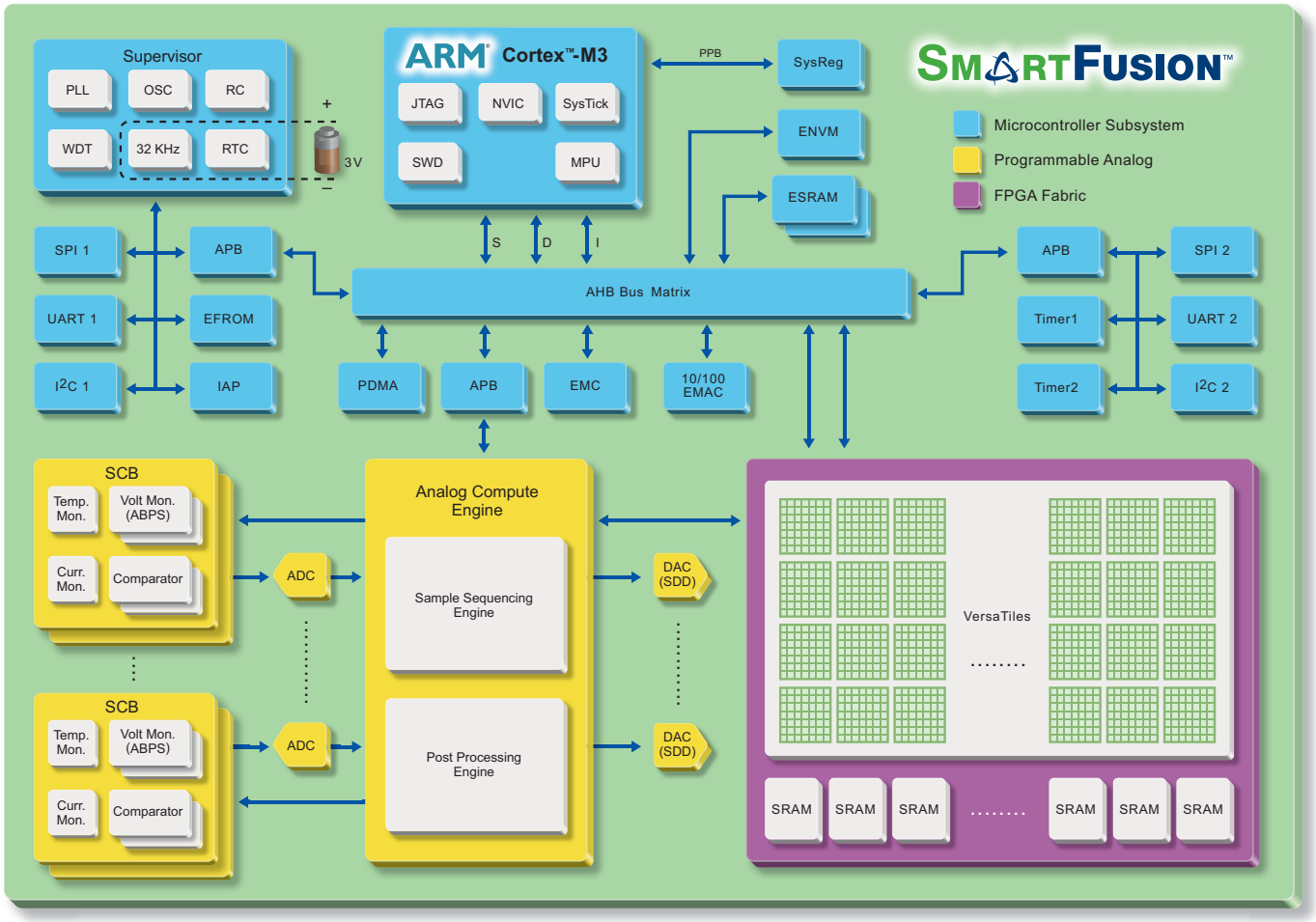

Legend:

SDD – Sigma-delta DAC
SCB – Signal conditioning block
PDMA – Peripheral DMA
IAP – In-application programming
ABPS – Active bipolar prescaler
WDT – Watchdog Timer
SWD – Serial Wire Debug

SmartFusion cSoC System Architecture

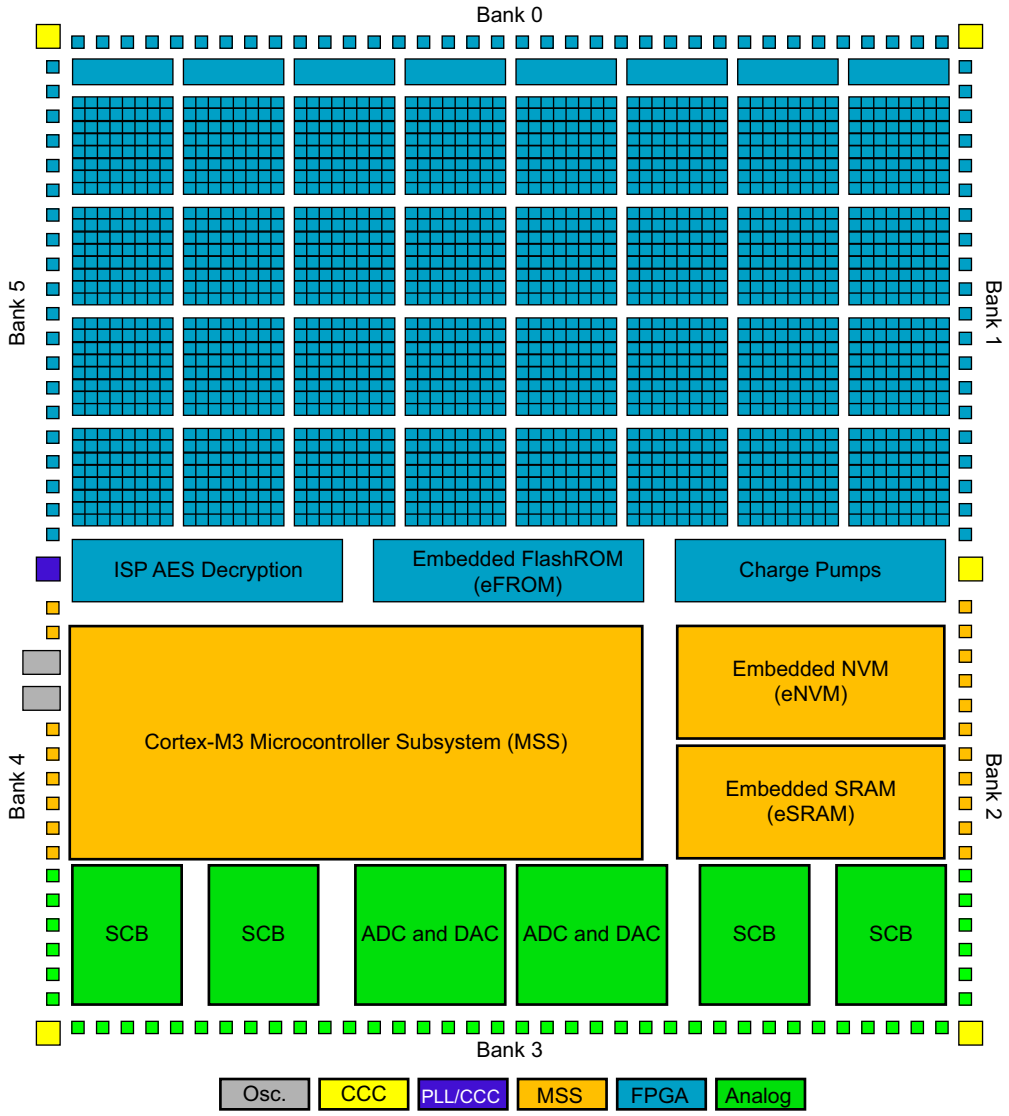

Note: Architecture for A2F200

Product Ordering Codes

A2F200 M3 F – 1 FG G 484 Y I

Application (junction temperature range)
Blank = Commercial (0 to +85°C)
I = Industrial (–40 to +100°C)
ES = Engineering Silicon (room temperature only)

Security Feature*
Y = Device Includes License to Implement IP Based on the Cryptography Research, Inc. (CRI) Patent Portfolio
Blank = Device Does Not Include License to Implement IP Based on the Cryptography Research, Inc. (CRI) Patent Portfolio

Package Lead Count
208
256
288
484

Lead-Free Packaging Options
Blank = Standard Packaging
G = RoHS-Compliant (green) Packaging

Package Type
TQ = Thin Quad Flat Pack (0.5 mm pitch)
PQ = Plastic Quad Flat Pack (0.5 mm pitch)
CS = Chip Scale Package (0.5 mm pitch)
FG = Fine Pitch Ball Grid Array (1.0 mm pitch)

Speed Grade
Blank = 80 MHz MSS Speed; FPGA Fabric at Standard Speed
–1 = 100 MHz MSS Speed; FPGA Fabric 15% Faster than Standard

eNVM Size
A = 8 Kbytes
B = 16 Kbytes
C = 32 Kbytes
D = 64 Kbytes
E = 128 Kbytes
F = 256 Kbytes
G = 512 Kbytes

Currently only the following eNVM sizes are available per device:

A2F500M3 – G
A2F200M3 – F
A2F060M3 – E

CPU Type
M3 = Cortex-M3

Part Number

SmartFusion Devices
A2F060 = 60,000 System Gates
A2F200 = 200,000 System Gates
A2F500 = 500,000 System Gates

*Note: *Most devices in the SmartFusion cSoC family can be ordered with the Y suffix. Devices with a package size greater or equal to 5x5 mm are supported. Contact your local Microsemi SoC Products Group sales representative for more information.*

Temperature Grade Offerings

SmartFusion cSoC	A2F060	A2F200	A2F500
TQ144	C, I	–	–
PQ208	–	C, I	C, I
CS288	C, I	C, I	C, I
FG256	C, I	C, I	C, I
FG484	–	C, I	C, I

Notes:
1. *C = Commercial Temperature Range: 0°C to 85°C Junction*
2. *I = Industrial Temperature Range: –40°C to 100°C Junction*

Table of Contents

SmartFusion Family Overview

Introduction 1-1
General Description 1-1

SmartFusion DC and Switching Characteristics

General Specifications 2-1
Calculating Power Dissipation 2-10
User I/O Characteristics 2-19
VersaTile Characteristics 2-55
Global Resource Characteristics 2-59
RC Oscillator 2-61
Main and Lower Power Crystal Oscillator 2-62
Clock Conditioning Circuits 2-63
FPGA Fabric SRAM and FIFO Characteristics 2-65
Embedded Nonvolatile Memory Block (eNVM) 2-75
Embedded FlashROM (eFROM) 2-76
JTAG 1532 Characteristics 2-76
Programmable Analog Specifications 2-77
Serial Peripheral Interface (SPI) Characteristics 2-89
Inter-Integrated Circuit (I^2C) Characteristics 2-91

SmartFusion Development Tools

Types of Design Tools 3-1
SmartFusion Ecosystem 3-3
Middleware 3-5
References 3-6

SmartFusion Programming

In-System Programming 4-7
In-Application Programming 4-8
Typical Programming and Erase Times 4-9
References 4-9

Pin Descriptions

Supply Pins 5-1
User-Defined Supply Pins 5-5
Global I/O Naming Conventions 5-6
User Pins 5-6
Special Function Pins 5-8
JTAG Pins 5-10
Microcontroller Subsystem (MSS) 5-12
Analog Front-End (AFE) 5-14
Analog Front-End Pin-Level Function Multiplexing 5-16
TQ144 5-18
CS288 5-22
PQ208 5-32
FG256 5-39

FG484 5-48

Datasheet Information

List of Changes 6-1
Datasheet Categories 6-13
Microsemi SoC Products Group Safety Critical, Life Support, and High-Reliability Applications Policy 6-13

1 – SmartFusion Family Overview

Introduction

The SmartFusion® family of cSoCs builds on the technology first introduced with the Fusion mixed signal FPGAs. SmartFusion cSoCs are made possible by integrating FPGA technology with programmable high-performance analog and hardened ARM Cortex-M3 microcontroller blocks on a flash semiconductor process. The SmartFusion cSoC takes its name from the fact that these three discrete technologies are integrated on a single chip, enabling the lowest cost of ownership and smallest footprint solution to you.

General Description

Microcontroller Subsystem (MSS)

The MSS is composed of a 100 MHz Cortex-M3 processor and integrated peripherals, which are interconnected via a multi-layer AHB bus matrix (ABM). This matrix allows the Cortex-M3 processor, FPGA fabric master, Ethernet message authentication controller (MAC), when available, and peripheral DMA (PDMA) controller to act as masters to the integrated peripherals, FPGA fabric, embedded nonvolatile memory (eNVM), embedded synchronous RAM (eSRAM), external memory controller (EMC), and analog compute engine (ACE) blocks.

SmartFusion cSoCs of different densities offer various sets of integrated peripherals. Available peripherals include SPI, I^2C, and UART serial ports, embedded FlashROM (EFROM), 10/100 Ethernet MAC, timers, phase-locked loops (PLLs), oscillators, real-time counters (RTC), and peripheral DMA controller (PDMA).

Programmable Analog

Analog Front-End (AFE)

SmartFusion cSoCs offer an enhanced analog front-end compared to Fusion devices. The successive approximation register analog-to-digital converters (SAR ADC) are similar to those found on Fusion devices. SmartFusion cSoC also adds first order sigma-delta digital-to-analog converters (SDD DAC).

SmartFusion cSoCs can handle multiple analog signals simultaneously with its signal conditioning blocks (SCBs). SCBs are made of a combination of active bipolar prescalers (ABPS), comparators, current monitors and temperature monitors. ABPS modules allow larger bipolar voltages to be fed to the ADC. Current monitors take the voltage across an external sense resistor and convert it to a voltage suitable for the ADC input range. Similarly, the temperature monitor reads the current through an external PN-junction (diode or transistor) and converts it internally for the ADC. The SCB also includes comparators to monitor fast signal thresholds without using the ADC. The output of the comparators can be fed to the analog compute engine or the ADC.

Analog Compute Engine (ACE)

The mixed signal blocks found in SmartFusion cSoCs are controlled and connected to the rest of the system via a dedicated processor called the analog compute engine (ACE). The role of the ACE is to offload control of the analog blocks from the Cortex-M3, thus offering faster throughput or better power consumption compared to a system where the main processor is in charge of monitoring the analog resources. The ACE is built to handle sampling, sequencing, and post-processing of the ADCs, DACs, and SCBs.

ProASIC3 FPGA Fabric

The SmartFusion cSoC family, based on the proven, low power, firm-error immune ProASIC®3 flash FPGA architecture, benefits from the advantages only flash-based devices offer:

Reduced Cost of Ownership

Advantages to the designer extend beyond low unit cost, high performance, and ease of use. Flash-based SmartFusion cSoCs are Instant On and do not need to be loaded from an external boot PROM at each power-up. On-board security mechanisms prevent access to the programming information and enable secure remote updates of the FPGA logic. Designers can perform secure remote in-system programming (ISP) to support future design iterations and critical field upgrades, with confidence that valuable IP cannot be compromised or copied. Secure ISP can be performed using the industry standard AES algorithm with MAC data authentication on the device.

Low Power

Flash-based SmartFusion cSoCs exhibit power characteristics similar to those of an ASIC, making them an ideal choice for power-sensitive applications. With SmartFusion cSoCs, there is no power-on current and no high current transition, both of which are common with SRAM-based FPGAs.

SmartFusion cSoCs also have low dynamic power consumption and support very low power time-keeping mode, offering further power savings.

Security

As the nonvolatile, flash-based SmartFusion cSoC family requires no boot PROM, there is no vulnerable external bitstream. SmartFusion cSoCs incorporate FlashLock®, which provides a unique combination of reprogrammability and design security without external overhead, advantages that only a device with nonvolatile flash programming can offer.

SmartFusion cSoCs utilize a 128-bit flash-based key lock and a separate AES key to provide security for programmed IP and configuration data. The FlashROM data in Fusion devices can also be encrypted prior to loading. Additionally, the flash memory blocks can be programmed during runtime using the AES-128 block cipher encryption standard (FIPS Publication 192).

SmartFusion cSoCs with AES-based security are designed to provide protection for remote field updates over public networks, such as the Internet, and help to ensure that valuable IP remains out of the hands of system overbuilders, system cloners, and IP thieves. As an additional security measure, the FPGA configuration data of a programmed Fusion device cannot be read back, although secure design verification is possible. During design, the user controls and defines both internal and external access to the flash memory blocks.

Security, built into the FPGA fabric, is an inherent component of the SmartFusion cSoC family. The flash cells are located beneath seven metal layers, and many device design and layout techniques have been used to make invasive attacks extremely difficult. SmartFusion cSoCs, with FlashLock and AES security, are unique in being highly resistant to both invasive and noninvasive attacks. Your valuable IP is protected with industry standard security measures, making remote ISP feasible. A SmartFusion cSoC provides the highest security available for programmable logic designs.

Single Chip

Flash-based FPGAs store their configuration information in on-chip flash cells. Once programmed, the configuration data is an inherent part of the FPGA structure, and no external configuration data needs to be loaded at system power-up (unlike SRAM-based FPGAs). Therefore, flash-based SmartFusion cSoCs do not require system configuration components such as electrically erasable programmable read-only memories (EEPROMs) or microcontrollers to load device configuration data during power-up. This reduces bill-of-materials costs and PCB area, and increases system security and reliability.

Instant On

Flash-based SmartFusion cSoCs are Instant On. Instant On SmartFusion cSoCs greatly simplify total system design and reduce total system cost by eliminating the need for complex programmable logic devices (CPLDs). SmartFusion Instant On clocking (PLLs) replace off-chip clocking resources. In addition, glitches and brownouts in system power will not corrupt the SmartFusion flash configuration. Unlike SRAM-based FPGAs, the device will not have to be reloaded when system power is restored. This enables reduction or complete removal of expensive voltage monitor and brownout detection

devices from the PCB design. Flash-based SmartFusion cSoCs simplify total system design and reduce cost and design risk, while increasing system reliability.

Immunity to Firm Errors

Firm errors occur most commonly when high-energy neutrons, generated in the atmosphere, strike a configuration cell of an SRAM FPGA. The energy of the collision can change the state of the configuration cell and thus change the logic, routing, or I/O configuration behavior in an unpredictable way.

Another source of radiation-induced firm errors is alpha particles. For alpha radiation to cause a soft or firm error, its source must be in very close proximity to the affected circuit. The alpha source must be in the package molding compound or in the die itself. While low-alpha molding compounds are being used increasingly, this helps reduce but does not entirely eliminate alpha-induced firm errors.

Firm errors are impossible to prevent in SRAM FPGAs. The consequence of this type of error can be a complete system failure. Firm errors do not occur in SmartFusion cSoCs. Once it is programmed, the flash cell configuration element of SmartFusion cSoCs cannot be altered by high energy neutrons and is therefore immune to errors from them. Recoverable (or soft) errors occur in the user data SRAMs of all FPGA devices. These can easily be mitigated by using error detection and correction (EDAC) circuitry built into the FPGA fabric.

Specifying I/O States During Programming

You can modify the I/O states during programming in FlashPro. In FlashPro, this feature is supported for PDB files generated from Designer v8.5 or greater. See the *FlashPro User's Guide* for more information.

Note: PDB files generated from Designer v8.1 to Designer v8.4 (including all service packs) have limited display of Pin Numbers only.

The I/Os are controlled by the JTAG Boundary Scan register during programming, except for the analog pins (AC, AT and AV). The Boundary Scan register of the AG pin can be used to enable/disable the gate driver in software v9.0.

1. Load a PDB from the FlashPro GUI. You must have a PDB loaded to modify the I/O states during programming.
2. From the FlashPro GUI, click PDB Configuration. A FlashPoint – Programming File Generator window appears.
3. Click the Specify I/O States During Programming button to display the Specify I/O States During Programming dialog box.
4. Sort the pins as desired by clicking any of the column headers to sort the entries by that header. Select the I/Os you wish to modify (Figure 1-1 on page 1-4).
5. Set the I/O Output State. You can set Basic I/O settings if you want to use the default I/O settings for your pins, or use Custom I/O settings to customize the settings for each pin. Basic I/O state settings:

   1 – I/O is set to drive out logic High

   0 – I/O is set to drive out logic Low

   Last Known State – I/O is set to the last value that was driven out prior to entering the programming mode, and then held at that value during programming

   Z -Tri-State: I/O is tristated

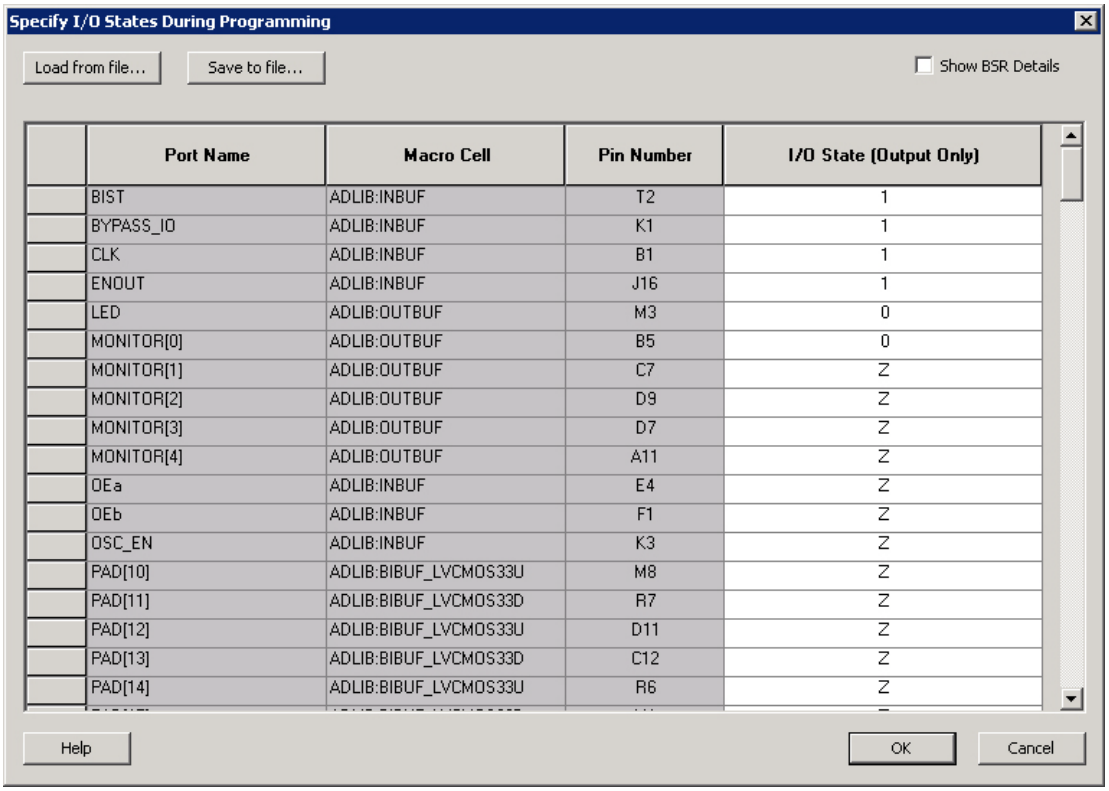

	Port Name	Macro Cell	Pin Number	I/O State (Output Only)
	BIST	ADLIB:INBUF	T2	1
	BYPASS_IO	ADLIB:INBUF	K1	1
	CLK	ADLIB:INBUF	B1	1
	ENOUT	ADLIB:INBUF	J16	1
	LED	ADLIB:OUTBUF	M3	0
	MONITOR[0]	ADLIB:OUTBUF	B5	0
	MONITOR[1]	ADLIB:OUTBUF	C7	Z
	MONITOR[2]	ADLIB:OUTBUF	D9	Z
	MONITOR[3]	ADLIB:OUTBUF	D7	Z
	MONITOR[4]	ADLIB:OUTBUF	A11	Z
	OEa	ADLIB:INBUF	E4	Z
	OEb	ADLIB:INBUF	F1	Z
	OSC_EN	ADLIB:INBUF	K3	Z
	PAD[10]	ADLIB:BIBUF_LVCMOS33U	M8	Z
	PAD[11]	ADLIB:BIBUF_LVCMOS33D	R7	Z
	PAD[12]	ADLIB:BIBUF_LVCMOS33U	D11	Z
	PAD[13]	ADLIB:BIBUF_LVCMOS33D	C12	Z
	PAD[14]	ADLIB:BIBUF_LVCMOS33U	R6	Z

Figure 1-1 • **I/O States During Programming Window**

6. Click OK to return to the FlashPoint – Programming File Generator window.

Note: I/O States During programming are saved to the ADB and resulting programming files after completing programming file generation.

2 – SmartFusion DC and Switching Characteristics

General Specifications

Operating Conditions

Stresses beyond the operating conditions listed in Table 2-1 may cause permanent damage to the device.

Exposure to absolute maximum rating conditions for extended periods may affect device reliability. Absolute Maximum Ratings are stress ratings only; functional operation of the device at these or any other conditions beyond those listed under the Recommended Operating Conditions specified in Table 2-3 on page 2-3 is not implied.

Table 2-1 • **Absolute Maximum Ratings**

Symbol	Parameter	Limits	Units
VCC	DC core supply voltage	–0.3 to 1.65	V
VJTAG	JTAG DC voltage	–0.3 to 3.75	V
VPP	Programming voltage	–0.3 to 3.75	V
VCCPLLx	Analog power supply (PLL)	–0.3 to 1.65	V
VCCFPGAIOBx	DC FPGA I/O buffer supply voltage	–0.3 to 3.75	V
VCCMSSIOBx	DC MSS I/O buffer supply voltage	–0.3 to 3.75	V
VI	I/O input voltage	–0.3 V to 3.6 V (when I/O hot insertion mode is enabled) –0.3 V to (VCCxxxxIOBx + 1 V) or 3.6 V, whichever voltage is lower (when I/O hot-insertion mode is disabled)	V
VCC33A	Analog clean 3.3 V supply to the analog circuitry	–0.3 to 3.75	V
VCC33ADCx	Analog 3.3 V supply to ADC	–0.3 to 3.75	V
VCC33AP	Analog clean 3.3 V supply to the charge pump	–0.3 to 3.75	V
VCC33SDDx	Analog 3.3 V supply to the sigma-delta DAC	–0.3 to 3.75	V
VAREFx	Voltage reference for ADC	1.0 to 3.75	V
VCCRCOSC	Analog supply to the integrated RC oscillator	–0.3 to 3.75	V
VDDBAT	External battery supply	–0.3 to 3.75	V
VCCMAINXTAL	Analog supply to the main crystal oscillator	–0.3 to 3.75	V
VCCLPXTAL	Analog supply to the low power 32 kHz crystal oscillator	–0.3 to 3.75	V
VCCENVM	Embedded nonvolatile memory supply	–0.3 to 1.65	V
VCCESRAM	Embedded SRAM supply	–0.3 to 1.65	V
VCC15A	Analog 1.5 V supply to the analog circuitry	–0.3 to 1.65	V
VCC15ADCx	Analog 1.5 V supply to the ADC	–0.3 to 1.65	V
T_{STG}[1]	Storage temperature	–65 to +150	°C
T_J[1]	Junction temperature	125	°C

Notes:

1. *For flash programming and retention maximum limits, refer to Table 2-4 on page 2-4. For recommended operating conditions, refer to Table 2-3 on page 2-3.*
2. *The device should be operated within the limits specified by the datasheet. During transitions, the input signal may undershoot or overshoot according to the limits shown in Table 2-5 on page 2-4.*

Table 2-2 • **Analog Maximum Ratings**

Parameter	Conditions	Min.	Max.	Units
ABPS[n] pad voltage (relative to ground)	GDEC[1:0] = 00 (±15.36 V range)			
	Absolute maximum	–11.5	14.4	V
	Recommended	–11	14	V
	GDEC[1:0] = 01 (±10.24 V range)	–11.5	12	V
	GDEC[1:0] = 10 (±5.12 V range)	–6	6	V
	GDEC[1:0] = 11 (±2.56 V range)	–3	3	V
CM[n] pad voltage relative to ground)	CMB_DI_ON = 0 (ADC isolated) COMP_EN = 0 (comparator off, for the associated even-numbered comparator)			
	Absolute maximum	–0.3	14.4	V
	Recommended	–0.3	14	V
	CMB_DI_ON = 0 (ADC isolated) COMP_EN = 1 (comparator on)	–0.3	3	V
	TMB_DI_ON = 1 (direct ADC in)	–0.3	3	V
TM[n] pad voltage (relative to ground)	TMB_DI_ON = 0 (ADC isolated) COMP_EN = 1(comparator on)	–0.3	3	V
	TMB_DI_ON = 1 (direct ADC in)	–0.3	3	V
ADC[n] pad voltage (relative to ground)		–0.3	3.6	V

Table 2-3 • **Recommended Operating Conditions[5,6]**

Symbol	Parameter[1]		Commercial	Industrial	Units
T_J	Junction temperature		0 to +85	–40 to +100	°C
VCC [2]	1.5 V DC core supply voltage		1.425 to 1.575	1.425 to 1.575	V
VJTAG	JTAG DC voltage		1.425 to 3.6	1.425 to 3.6	V
VPP	Programming voltage	Programming mode[3]	3.15 to 3.45	3.15 to 3.45	V
		Operation[4]	0 to 3.6	0 to 3.6	V
VCCPLLx	Analog power supply (PLL)		1.425 to 1.575	1.425 to 1.575	V
VCCFPGAIOBx/ VCCMSSIOBx[5]	1.5 V DC supply voltage		1.425 to 1.575	1.425 to 1.575	V
	1.8 V DC supply voltage		1.7 to 1.9	1.7 to 1.9	V
	2.5 V DC supply voltage		2.3 to 2.7	2.3 to 2.7	V
	3.3 V DC supply voltage		3.0 to 3.6	3.0 to 3.6	V
	LVDS differential I/O		2.375 to 2.625	2.375 to 2.625	V
	LVPECL differential I/O		3.0 to 3.6	3.0 to 3.6	V
VCC33A[6]	Analog clean 3.3 V supply to the analog circuitry		3.15 to 3.45	3.15 to 3.45	V
VCC33ADCx[6]	Analog 3.3 V supply to ADC		3.15 to 3.45	3.15 to 3.45	V
VCC33AP[6]	Analog clean 3.3 V supply to the charge pump		3.15 to 3.45	3.15 to 3.45	V
VCC33SDDx[6]	Analog 3.3 V supply to sigma-delta DAC		3.15 to 3.45	3.15 to 3.45	V
VAREFx	Voltage reference for ADC		2.527 to 3.3	2.527 to 3.3	V
VCCRCOSC	Analog supply to the integrated RC oscillator		3.15 to 3.45	3.15 to 3.45	V
VDDBAT	External battery supply		2.7 to 3.63	2.7 to 3.63	V
VCCMAINXTAL[6]	Analog supply to the main crystal oscillator		3.15 to 3.45	3.15 to 3.45	V
VCCLPXTAL[6]	Analog supply to the low power 32 KHz crystal oscillator		3.15 to 3.45	3.15 to 3.45	V
VCCENVM	Embedded nonvolatile memory supply		1.425 to 1.575	1.425 to 1.575	V
VCCESRAM	Embedded SRAM supply		1.425 to 1.575	1.425 to 1.575	V
VCC15A[2]	Analog 1.5 V supply to the analog circuitry		1.425 to 1.575	1.425 to 1.575	V
VCC15ADCx[2]	Analog 1.5 V supply to the ADC		1.425 to 1.575	1.425 to 1.575	V

Notes:

1. *All parameters representing voltages are measured with respect to GND unless otherwise specified.*
2. *The following 1.5 V supplies should be connected together while following proper noise filtering practices: VCC, VCC15A, and VCC15ADCx.*
3. *The Programming temperature range supported is $T_{ambient}$ = 0°C to 85°C.*
4. *VPP can be left floating during operation (not programming mode).*
5. *The ranges given here are for power supplies only. The recommended input voltage ranges specific to each I/O standard are given in Table 2-19 on page 2-23. VCCxxxxIOBx should be at the same voltage within a given I/O bank.*
6. *The following 3.3 V supplies should be connected together while following proper noise filtering practices: VCC33A, VCC33ADCx, VCC33AP, VCC33SDDx, VCCMAINXTAL, and VCCLPXTAL.*
7.

Table 2-4 • **FPGA and Embedded Flash Programming, Storage and Operating Limits**

Product Grade	Storage Temperature	Element	Grade Programming Cycles	Retention
Commercial	Min. T_J = 0°C	FPGA/FlashROM	500	20 years
	Max. T_J = 85°C	Embedded Flash	< 1,000	20 years
			< 10,000	10 years
			< 15,000	5 years
Industrial	Min. T_J = –40°C	FPGA/FlashROM	500	20 years
	Max. T_J = 100°C	Embedded Flash	< 1,000	20 years
			< 10,000	10 years
			< 15,000	5 years

Table 2-5 • **Overshoot and Undershoot Limits** [1]

VCCxxxxIOBx	Average VCCxxxxIOBx–GND Overshoot or Undershoot Duration as a Percentage of Clock Cycle[2]	Maximum Overshoot/ Undershoot[2]
2.7 V or less	10%	1.4 V
	5%	1.49 V
3 V	10%	1.1 V
	5%	1.19 V
3.3 V	10%	0.79 V
	5%	0.88 V
3.6 V	10%	0.45 V
	5%	0.54 V

Notes:

1. *Based on reliability requirements at 85°C.*
2. *The duration is allowed at one out of six clock cycles. If the overshoot/undershoot occurs at one out of two cycles, the maximum overshoot/undershoot has to be reduced by 0.15 V.*
3. *This table does not provide PCI overshoot/undershoot limits.*

Power Supply Sequencing Requirement

SmartFusion cSoCs have an on-chip 1.5 V regulator, but usage of an external 1.5 V supply is also allowed while the on-chip regulator is disabled. In that case, the 3.3 V supplies (VCC33A, etc.) should be powered before 1.5 V (VCC, etc.) supplies. The 1.5 V supplies should be enabled only after 3.3 V supplies reach a value higher than 2.7 V.

I/O Power-Up and Supply Voltage Thresholds for Power-On Reset (Commercial and Industrial)

Sophisticated power-up management circuitry is designed into every SmartFusion cSoC. These circuits ensure easy transition from the powered-off state to the powered-up state of the device. In addition, the I/O will be in a known state through the power-up sequence. The basic principle is shown in Figure 2-1 on page 2-6.

There are five regions to consider during power-up.

SmartFusion I/Os are activated only if ALL of the following three conditions are met:

1. VCC and VCCxxxxIOBx are above the minimum specified trip points (Figure 2-1 on page 2-6).
2. VCCxxxxIOBx > VCC – 0.75 V (typical)
3. Chip is in the SoC Mode.

VCCxxxxIOBx Trip Point:
Ramping up: 0.6 V < trip_point_up < 1.2 V
Ramping down: 0.5 V < trip_point_down < 1.1 V

VCC Trip Point:
Ramping up: 0.6 V < trip_point_up < 1.1 V
Ramping down: 0.5 V < trip_point_down < 1 V

VCC and VCCxxxxIOBx ramp-up trip points are about 100 mV higher than ramp-down trip points. This specifically built-in hysteresis prevents undesirable power-up oscillations and current surges. Note the following:

- By default, during programming I/Os become tristated and weakly pulled up to VCCxxxxIOBx. You can modify the I/O states during programming in FlashPro. For more details, refer to "Specifying I/O States During Programming" on page 1-3.
- JTAG supply, PLL power supplies, and charge pump VPUMP supply have no influence on I/O behavior.

PLL Behavior at Brownout Condition

The Microsemi SoC Products Group recommends using monotonic power supplies or voltage regulators to ensure proper power-up behavior. Power ramp-up should be monotonic at least until VCC and VCCPLLx exceed brownout activation levels. The VCC activation level is specified as 1.1 V worst-case (see Figure 2-1 on page 2-6 for more details).

When PLL power supply voltage and/or VCC levels drop below the VCC brownout levels (0.75 V ± 0.25 V), the PLL output lock signal goes low and/or the output clock is lost. Refer to the "Power-Up/-Down Behavior of Low Power Flash Devices" chapter of the *ProASIC3 FPGA Fabric User's Guide* for information on clock and lock recovery.

Internal Power-Up Activation Sequence

1. Core
2. Input buffers

Output buffers, after 200 ns delay from input buffer activation

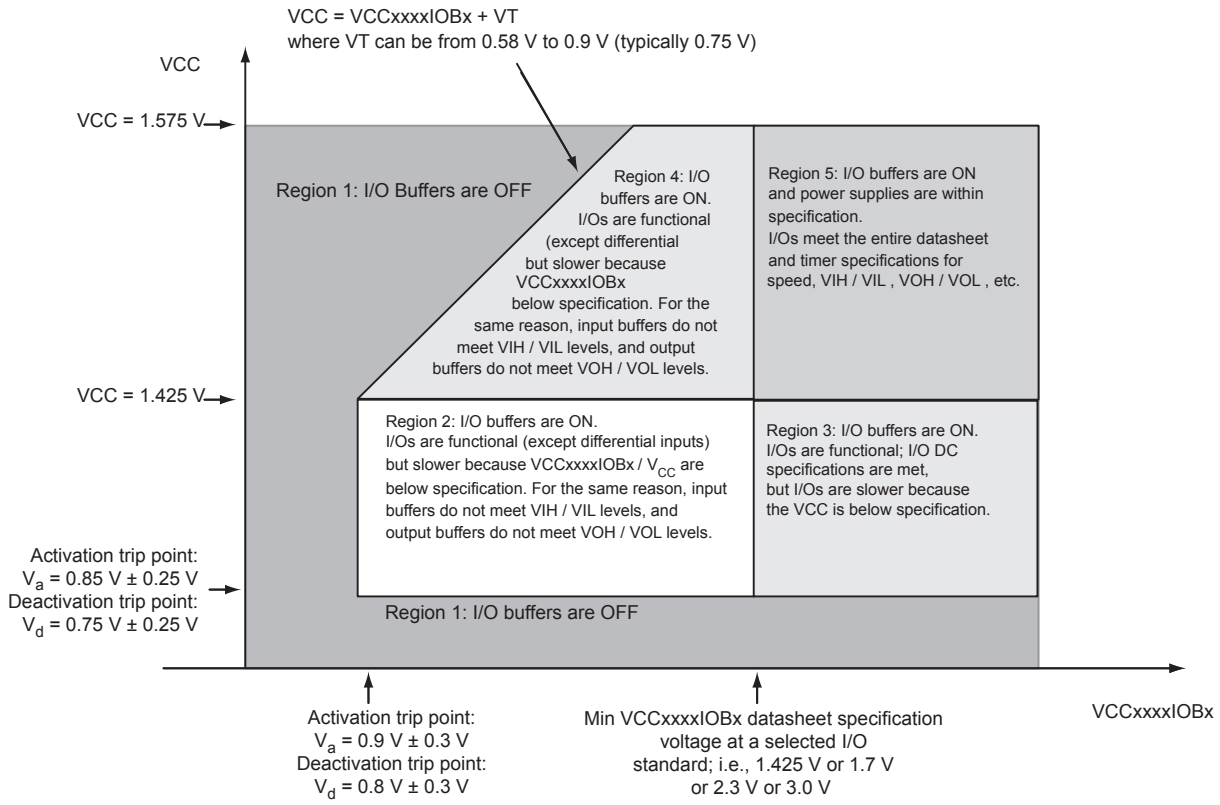

Figure 2-1 • **I/O State as a Function of VCCxxxxIOBx and VCC Voltage Levels**

Thermal Characteristics

Introduction

The temperature variable in the SoC Products Group Designer software refers to the junction temperature, not the ambient, case, or board temperatures. This is an important distinction because dynamic and static power consumption will cause the chip's junction temperature to be higher than the ambient, case, or board temperatures. EQ 1 through EQ 3 give the relationship between thermal resistance, temperature gradient, and power.

$$\theta_{JA} = \frac{T_J - \theta_A}{P}$$

EQ 1

$$\theta_{JB} = \frac{T_J - T_B}{P}$$

EQ 2

$$\theta_{JC} = \frac{T_J - T_C}{P}$$

EQ 3

where

θ_{JA} = Junction-to-air thermal resistance
θ_{JB} = Junction-to-board thermal resistance
θ_{JC} = Junction-to-case thermal resistance
T_J = Junction temperature
T_A = Ambient temperature
T_B = Board temperature (measured 1.0 mm away from the package edge)
T_C = Case temperature
P = Total power dissipated by the device

Table 2-6 • **Package Thermal Resistance**

Product	θ_{JA}			θ_{JC}	θ_{JB}	Units
	Still Air	1.0 m/s	2.5 m/s			
A2F200M3F-FG256	33.7	30.0	28.3	9.3	24.8	°C/W
A2F200M3F-FG484	21.8	18.2	16.7	7.7	16.8	°C/W
A2F200M3F-CS288	26.6	20.2	18.1	7.3	9.4	°C/W
A2F200M3F-PQG208I	38.5	34.6	33.1	0.7	31.6	°C/W

Theta-JA

Junction-to-ambient thermal resistance (θ_{JA}) is determined under standard conditions specified by JEDEC (JESD-51), but it has little relevance in actual performance of the product. It should be used with caution but is useful for comparing the thermal performance of one package to another.

A sample calculation showing the maximum power dissipation allowed for the A2F200-FG484 package under forced convection of 1.0 m/s and 75°C ambient temperature is as follows:

$$\text{Maximum Power Allowed} = \frac{T_{J(MAX)} - T_{A(MAX)}}{\theta_{JA}}$$

EQ 4

where

θ_{JA} = 19.00°C/W (taken from Table 2-6 on page 2-7).

T_A = 75.00°C

$$\text{Maximum Power Allowed} = \frac{100.00°C - 75.00°C}{19.00°C/W} = 1.3\ W$$

EQ 5

The power consumption of a device can be calculated using the Microsemi SoC Products Group power calculator. The device's power consumption must be lower than the calculated maximum power dissipation by the package. If the power consumption is higher than the device's maximum allowable power dissipation, a heat sink can be attached on top of the case, or the airflow inside the system must be increased.

Theta-JB

Junction-to-board thermal resistance (θ_{JB}) measures the ability of the package to dissipate heat from the surface of the chip to the PCB. As defined by the JEDEC (JESD-51) standard, the thermal resistance from junction to board uses an isothermal ring cold plate zone concept. The ring cold plate is simply a means to generate an isothermal boundary condition at the perimeter. The cold plate is mounted on a JEDEC standard board with a minimum distance of 5.0 mm away from the package edge.

Theta-JC

Junction-to-case thermal resistance (θ_{JC}) measures the ability of a device to dissipate heat from the surface of the chip to the top or bottom surface of the package. It is applicable for packages used with external heat sinks. Constant temperature is applied to the surface in consideration and acts as a boundary condition. This only applies to situations where all or nearly all of the heat is dissipated through the surface in consideration.

Calculation for Heat Sink

For example, in a design implemented in an A2F200-FG484 package with 2.5 m/s airflow, the power consumption value using the power calculator is 3.00 W. The user-dependent T_a and T_j are given as follows:

T_J = 100.00°C

T_A = 70.00°C

From the datasheet:

θ_{JA} = 17.00°C/W

θ_{JC} = 8.28°C/W

$$P = \frac{T_J - T_A}{\theta_{JA}} = \frac{100°C - 70°C}{17.00\ W} = 1.76\ W$$

EQ 6

The 1.76 W power is less than the required 3.00 W. The design therefore requires a heat sink, or the airflow where the device is mounted should be increased. The design's total junction-to-air thermal resistance requirement can be estimated by EQ 7:

$$\theta_{JA(total)} = \frac{T_J - T_A}{P} = \frac{100°C - 70°C}{3.00\ W} = 10.00°C/W$$

EQ 7

Determining the heat sink's thermal performance proceeds as follows:

$$\theta_{JA(TOTAL)} = \theta_{JC} + \theta_{CS} + \theta_{SA}$$

EQ 8

where

θ_{JA} = 0.37°C/W

= Thermal resistance of the interface material between the case and the heat sink, usually provided by the thermal interface manufacturer

θ_{SA} = Thermal resistance of the heat sink in °C/W

$$\theta_{SA} = \theta_{JA(TOTAL)} - \theta_{JC} - \theta_{CS}$$

EQ 9

$$\theta_{SA} = 13.33°C/W - 8.28°C/W - 0.37°C/W = 5.01°C/W$$

A heat sink with a thermal resistance of 5.01°C/W or better should be used. Thermal resistance of heat sinks is a function of airflow. The heat sink performance can be significantly improved with increased airflow.

Carefully estimating thermal resistance is important in the long-term reliability of an FPGA. Design engineers should always correlate the power consumption of the device with the maximum allowable power dissipation of the package selected for that device.

Note: The junction-to-air and junction-to-board thermal resistances are based on JEDEC standard (JESD-51) and assumptions made in building the model. It may not be realized in actual application and therefore should be used with a degree of caution. Junction-to-case thermal resistance assumes that all power is dissipated through the case.

Temperature and Voltage Derating Factors

Table 2-7 • **Temperature and Voltage Derating Factors for Timing Delays (normalized to T_J = 85°C, worst-case VCC = 1.425 V)**

Array Voltage VCC (V)	Junction Temperature (°C)					
	–40°C	0°C	25°C	70°C	85°C	100°C
1.425	0.86	0.91	0.93	0.98	1.00	1.02
1.500	0.81	0.86	0.88	0.93	0.95	0.96
1.575	0.78	0.83	0.85	0.90	0.91	0.93

Calculating Power Dissipation

Quiescent Supply Current

Table 2-8 • **Power Supplies Configuration**

Modes and Power Supplies	VCCxxxxIOBx VCCFPGAIOBx VCCMSSIOBx	VCC33A / VCC33ADCx VCC33AP / VCC33SDDx VCCMAINXTAL / VCCLPXTAL	VCC / VCC15A / VCC15ADCx VCCPLLx, VCCENVM, VCCESRAM	VDDBAT	VCCRCOSC	VJTAG	VPP	eNVM (reset/off)	LPXTAL (enable/disable)	MAINXTAL (enable/disable)
Time Keeping mode	0 V	0 V	0 V	3.3 V	0 V	0 V	0 V	Off	Enable	Disable
Standby mode	On*	3.3 V	1.5 V	N/A	3.3 V	N/A	N/A	Reset	Enable	Disable
SoC mode	On*	3.3 V	1.5 V	N/A	3.3 V	N/A	N/A	On	Enable	Enable

*Note: *On means proper voltage is applied. Refer to Table 2-3 on page 2-3 for recommended operating conditions.*

Table 2-9 • **Quiescent Supply Current Characteristics**

Parameter	Modes	A2F060		A2F200		A2F500	
		1.5 V Domain	3.3 V Domain	1.5 V Domain	3.3 V Domain	1.5 V Domain	3.3 V Domain
IDC1	SoC mode	3 mA	2 mA	7 mA	4 mA	16.5 mA	4 mA
IDC2	Standby mode	3 mA	2 mA	7 mA	4 mA	16.5 mA	4 mA
IDC3	Time Keeping mode	N/A	10 µA	N/A	10 µA	N/A	10 µA

Power per I/O Pin

Table 2-10 • **Summary of I/O Input Buffer Power (per pin) – Default I/O Software Settings Applicable to FPGA I/O Banks, I/O Assigned to EMC I/O Pins**

	VCCFPGAIOBx (V)	Static Power PDC7 (mW)	Dynamic Power PAC9 (µW/MHz)
Single-Ended			
3.3 V LVTTL / 3.3 V LVCMOS	3.3	–	17.55
2.5 V LVCMOS	2.5	–	5.97
1.8 V LVCMOS	1.8	–	2.88
1.5 V LVCMOS (JESD8-11)	1.5	–	2.33
3.3 V PCI	3.3	–	19.21
3.3 V PCI-X	3.3	–	19.21
Differential			
LVDS	2.5	2.26	0.82
LVPECL	3.3	5.72	1.16

***Table 2-11* • Summary of I/O Input Buffer Power (per pin) – Default I/O Software Settings Applicable to MSS I/O Banks**

	VCCMSSIOBx (V)	Static Power PDC7 (mW)	Dynamic Power PAC9 (µW/MHz)
Single-Ended			
3.3 V LVTTL / 3.3 V LVCMOS	3.3	–	17.21
3.3 V LVCMOS / 3.3 V LVCMOS – Schmitt trigger	3.3	–	20.00
2.5 V LVCMOS	2.5	–	5.55
2.5 V LVCMOS – Schmitt trigger	2.5	–	7.03
1.8 V LVCMOS	1.8	–	2.61
1.8 V LVCMOS – Schmitt trigger	1.8	–	2.72
1.5 V LVCMOS (JESD8-11)	1.5	–	1.98
1.5 V LVCMOS (JESD8-11) – Schmitt trigger	1.5	–	1.93

***Table 2-12* • Summary of I/O Output Buffer Power (per pin) – Default I/O Software Settings* Applicable to FPGA I/O Banks, I/O Assigned to EMC I/O Pins**

	C_{LOAD} (pF)	VCCFPGAIOBx (V)	Static Power PDC8 (mW)	Dynamic Power PAC10 (µW/MHz)
Single-Ended				
3.3 V LVTTL / 3.3 V LVCMOS	35	3.3	–	475.66
2.5 V LVCMOS	35	2.5	–	270.50
1.8 V LVCMOS	35	1.8	–	152.17
1.5 V LVCMOS (JESD8-11)	35	1.5	–	104.44
3.3 V PCI	10	3.3	–	202.69
3.3 V PCI-X	10	3.3	–	202.69
Differential				
LVDS	–	2.5	7.74	88.26
LVPECL	–	3.3	19.54	164.99

*Note: *Dynamic power consumption is given for standard load and software default drive strength and output slew.*

***Table 2-13* • Summary of I/O Output Buffer Power (per pin) – Default I/O Software Settings Applicable to MSS I/O Banks**

	C_{LOAD} (pF)	VCCMSSIOBx (V)	Static Power PDC8 (mW)[2]	Dynamic Power PAC10 (µW/MHz)[3]
Single-Ended				
3.3 V LVTTL / 3.3 V LVCMOS	10	3.3	–	155.65
2.5 V LVCMOS	10	2.5	–	88.23
1.8 V LVCMOS	10	1.8	–	45.03
1.5 V LVCMOS (JESD8-11)	10	1.5	–	31.01

Power Consumption of Various Internal Resources

***Table 2-14* • Different Components Contributing to Dynamic Power Consumption in SmartFusion cSoCs**

Parameter	Definition	Power Supply		Device			Units
		Name	Domain	A2F060	A2F200	A2F500	
PAC1	Clock contribution of a Global Rib	VCC	1.5 V	3.39	3.40	5.05	µW/MHz
PAC2	Clock contribution of a Global Spine	VCC	1.5 V	1.14	1.83	2.50	µW/MHz
PAC3	Clock contribution of a VersaTile row	VCC	1.5 V	1.15	1.15	1.15	µW/MHz
PAC4	Clock contribution of a VersaTile used as a sequential module	VCC	1.5 V	0.12	0.12	0.12	µW/MHz
PAC5	First contribution of a VersaTile used as a sequential module	VCC	1.5 V	0.07	0.07	0.07	µW/MHz
PAC6	Second contribution of a VersaTile used as a sequential module	VCC	1.5 V	0.29	0.29	0.29	µW/MHz
PAC7	Contribution of a VersaTile used as a combinatorial module	VCC	1.5 V	0.29	0.29	0.29	µW/MHz
PAC8	Average contribution of a routing net	VCC	1.5 V	1.04	0.79	0.79	µW/MHz
PAC9	Contribution of an I/O input pin (standard dependent)	VCCxxxxIOBx/VCC	See Table 2-10 and Table 2-11 on page 2-11				
PAC10	Contribution of an I/O output pin (standard dependent)	VCCxxxxIOBx/VCC	See Table 2-12 and Table 2-13 on page 2-11				
PAC11	Average contribution of a RAM block during a read operation	VCC	1.5 V	25.00			µW/MHz
PAC12	Average contribution of a RAM block during a write operation	VCC	1.5 V	30.00			µW/MHz
PAC13	Dynamic Contribution for PLL	VCC	1.5 V	2.60			µW/MHz
PAC15	Contribution of NVM block during a read operation (F < 33MHz)	VCC	1.5 V	358.00			µW/MHz
PAC16	1st contribution of NVM block during a read operation (F > 33MHz)	VCC	1.5 V	12.88			mW
PAC17	2nd contribution of NVM block during a read operation (F > 33MHz)	VCC	1.5 V	4.80			µW/MHz
PAC18	Main Crystal Oscillator contribution	VCCMAINXTAL	3.3 V	1.98			mW
PAC19a	RC Oscillator contribution	VCCRCOSC	3.3 V	3.30			mW
PAC19b	RC Oscillator contribution	VCC	1.5 V	3.00			mW
PAC20a	Analog Block Dynamic Power Contribution of the ADC	VCC33ADCx	3.3 V	8.25			mW
PAC20b	Analog Block Dynamic Power Contribution of the ADC	VCC15ADCx	1.5 V	3.00			mW
PAC21	Low Power Crystal Oscillator contribution	VCCLPXTAL	3.3 V	33.00			µW
PAC22	MSS Dynamic Power Contribution – Running Drysthone at 100MHz[1]	VCC	1.5 V	67.50			mW
PAC23	Temperature Monitor Power Contribution	See Table 2-94 on page 2-78	–	1.23			mW

***Table 2-14* • Different Components Contributing to Dynamic Power Consumption in SmartFusion cSoCs**

Parameter	Definition	Power Supply		Device			Units
		Name	Domain	A2F060	A2F200	A2F500	
PAC24	Current Monitor Power Contribution	See Table 2-93 on page 2-77	–	1.03			mW
PAC25	ABPS Power Contribution	See Table 2-97 on page 2-82	–	0.70			mW
PAC26	Sigma-Delta DAC Power Contribution[2]	See Table 2-99 on page 2-85	–	0.58			mW
PAC27	Comparator Power Contribution	See Table 2-98 on page 2-84	–	1.02			mW
PAC28	Voltage Regulator Power Contribution[3]	See Table 2-100 on page 2-87	–	36.30			mW

Notes:

1. *For a different use of MSS peripherals and resources, refer to SmartPower.*
2. *Assumes Input = Half Scale Operation mode.*
3. *Assumes 100 mA load on 1.5 V domain.*

***Table 2-15* • Different Components Contributing to the Static Power Consumption in SmartFusion cSoCs**

Parameter	Definition	Power Supply		Device			Units
		Name	Domain	A2F060	A2F200	A2F200	
PDC1	Core static power contribution in SoC mode	VCC	1.5 V	11.10	23.70	37.95	mW
PDC2	Device static power contribution in Standby Mode	See Table 2-8 on page 2-10	–	11.10	23.70	37.95	mW
PDC3	Device static power contribution in Time Keeping mode	See Table 2-8 on page 2-10	3.3 V	33.00	33.00	33.00	µW
PDC7	Static contribution per input pin (standard dependent contribution)	VCCxxxxIOBx/VCC	See Table 2-10 and Table 2-11 on page 2-11.				
PDC8	Static contribution per output pin (standard dependent contribution)	VCCxxxxIOBx/VCC	See Table 2-12 and Table 2-13 on page 2-11.				
PDC9	Static contribution per PLL	VCC	1.5 V	2.55	2.55	2.55	mW

***Table 2-16* • eNVM Dynamic Power Consumption**

Parameter	Description	Condition	Min.	Typ.	Max.	Units
eNVM System	eNVM array operating power	Idle		795		µA
		Read operation	See Table 2-14 on page 2-12.			
		Erase		900		µA
		Write		900		µA
PNVMCTRL	eNVM controller operating power			20		µW/MHz

Power Calculation Methodology

This section describes a simplified method to estimate power consumption of an application. For more accurate and detailed power estimations, use the SmartPower tool in the Libero SoC software.

The power calculation methodology described below uses the following variables:

- The number of PLLs/CCCs as well as the number and the frequency of each output clock generated
- The number of combinatorial and sequential cells used in the design
- The internal clock frequencies
- The number and the standard of I/O pins used in the design
- The number of RAM blocks used in the design
- The number of eNVM blocks used in the design
- The analog block used in the design, including the temperature monitor, current monitor, ABPS, sigma-delta DAC, comparator, low power crystal oscillator, RC oscillator and the main crystal oscillator
- Toggle rates of I/O pins as well as VersaTiles—guidelines are provided in Table 2-17 on page 2-18.
- Enable rates of output buffers—guidelines are provided for typical applications in Table 2-18 on page 2-18.
- Read rate and write rate to the memory—guidelines are provided for typical applications in Table 2-18 on page 2-18.
- Read rate to the eNVM blocks

The calculation should be repeated for each clock domain defined in the design.

Methodology

Total Power Consumption—P_{TOTAL}

SoC Mode, Standby Mode, and Time Keeping Mode.

$P_{TOTAL} = P_{STAT} + P_{DYN}$

P_{STAT} is the total static power consumption.

P_{DYN} is the total dynamic power consumption.

Total Static Power Consumption—P_{STAT}

SoC Mode

$P_{STAT} = P_{DC1} + (N_{INPUTS} * P_{DC7}) + (N_{OUTPUTS} * P_{DC8}) + (N_{PLLS} * P_{DC9})$

N_{INPUTS} is the number of I/O input buffers used in the design.

$N_{OUTPUTS}$ is the number of I/O output buffers used in the design.

N_{PLLS} is the number of PLLs available in the device.

Standby Mode

$P_{STAT} = P_{DC2}$

Time Keeping Mode

$P_{STAT} = P_{DC3}$

Total Dynamic Power Consumption—P_{DYN}

SoC Mode

$P_{DYN} = P_{CLOCK} + P_{S\text{-}CELL} + P_{C\text{-}CELL} + P_{NET} + P_{INPUTS} + P_{OUTPUTS} + P_{MEMORY} + P_{PLL} + P_{eNVM} + P_{XTL\text{-}OSC} + P_{RC\text{-}OSC} + P_{AB} + P_{LPXTAL\text{-}OSC} + P_{MSS}$

Standby Mode

$P_{DYN} = P_{RC\text{-}OSC} + P_{LPXTAL\text{-}OSC}$

Time Keeping Mode

$P_{DYN} = P_{LPXTAL\text{-}OSC}$

Global Clock Dynamic Contribution—P_{CLOCK}

SoC Mode

$P_{CLOCK} = (P_{AC1} + N_{SPINE} * P_{AC2} + N_{ROW} * PAC3 + N_{S\text{-}CELL} * P_{AC4}) * F_{CLK}$

N_{SPINE} is the number of global spines used in the user design—guidelines are provided in the "Device Architecture" chapter of the *SmartFusion FPGA Fabric User's Guide.*

N_{ROW} is the number of VersaTile rows used in the design—guidelines are provided in the "Device Architecture" chapter of the *SmartFusion FPGA Fabric User's Guide*.

F_{CLK} is the global clock signal frequency.

$N_{S\text{-}CELL}$ is the number of VersaTiles used as sequential modules in the design.

Standby Mode and Time Keeping Mode

$P_{CLOCK} = 0$ W

Sequential Cells Dynamic Contribution—$P_{S\text{-}CELL}$

SoC Mode

$P_{S\text{-}CELL} = N_{S\text{-}CELL} * (P_{AC5} + (\alpha_1 / 2) * P_{AC6}) * F_{CLK}$

$N_{S\text{-}CELL}$ is the number of VersaTiles used as sequential modules in the design. When a multi-tile sequential cell is used, it should be accounted for as 1.

α_1 is the toggle rate of VersaTile outputs—guidelines are provided in Table 2-17 on page 2-18.

F_{CLK} is the global clock signal frequency.

Standby Mode and Time Keeping Mode

$P_{S\text{-}CELL} = 0$ W

Combinatorial Cells Dynamic Contribution—$P_{C\text{-}CELL}$

SoC Mode

$P_{C\text{-}CELL} = N_{C\text{-}CELL} * (\alpha_1 / 2) * P_{AC7} * F_{CLK}$

$N_{C\text{-}CELL}$ is the number of VersaTiles used as combinatorial modules in the design.

α_1 is the toggle rate of VersaTile outputs—guidelines are provided in Table 2-17 on page 2-18.

F_{CLK} is the global clock signal frequency.

Standby Mode and Time Keeping Mode

$P_{C\text{-}CELL} = 0$ W

Routing Net Dynamic Contribution—P_{NET}

SoC Mode

$P_{NET} = (N_{S\text{-}CELL} + N_{C\text{-}CELL}) * (\alpha_1 / 2) * P_{AC8} * F_{CLK}$

$N_{S\text{-}CELL}$ is the number VersaTiles used as sequential modules in the design.

$N_{C\text{-}CELL}$ is the number of VersaTiles used as combinatorial modules in the design.

α_1 is the toggle rate of VersaTile outputs—guidelines are provided in Table 2-17 on page 2-18.

F_{CLK} is the frequency of the clock driving the logic including these nets.

Standby Mode and Time Keeping Mode

P_{NET} = 0 W

I/O Input Buffer Dynamic Contribution—P_{INPUTS}

SoC Mode

$P_{INPUTS} = N_{INPUTS} * (\alpha_2 / 2) * P_{AC9} * F_{CLK}$

Where:

N_{INPUTS} is the number of I/O input buffers used in the design.

α_2 is the I/O buffer toggle rate—guidelines are provided in Table 2-17 on page 2-18.

F_{CLK} is the global clock signal frequency.

Standby Mode and Time Keeping Mode

P_{INPUTS} = 0 W

I/O Output Buffer Dynamic Contribution—$P_{OUTPUTS}$

SoC Mode

$P_{OUTPUTS} = N_{OUTPUTS} * (\alpha_2 / 2) * \beta_1 * P_{AC10} * F_{CLK}$

Where:

$N_{OUTPUTS}$ is the number of I/O output buffers used in the design.

α_2 is the I/O buffer toggle rate—guidelines are provided in Table 2-17 on page 2-18.

β_1 is the I/O buffer enable rate—guidelines are provided in Table 2-18 on page 2-18.

F_{CLK} is the global clock signal frequency.

Standby Mode and Time Keeping Mode

$P_{OUTPUTS}$ = 0 W

FPGA Fabric SRAM Dynamic Contribution—P_{MEMORY}

SoC Mode

$P_{MEMORY} = (N_{BLOCKS} * P_{AC11} * \beta_2 * F_{READ\text{-}CLOCK}) + (N_{BLOCKS} * P_{AC12} * \beta_3 * F_{WRITE\text{-}CLOCK})$

Where:

N_{BLOCKS} is the number of RAM blocks used in the design.

$F_{READ\text{-}CLOCK}$ is the memory read clock frequency.

β_2 is the RAM enable rate for read operations—guidelines are provided in Table 2-18 on page 2-18.

β_3 the RAM enable rate for write operations—guidelines are provided in Table 2-18 on page 2-18.

$F_{WRITE\text{-}CLOCK}$ is the memory write clock frequency.

Standby Mode and Time Keeping Mode

P_{MEMORY} = 0 W

PLL/CCC Dynamic Contribution—P_{PLL}

SoC Mode

$P_{PLL} = P_{AC13} * F_{CLKOUT}$

F_{CLKIN} is the input clock frequency.

F_{CLKOUT} is the output clock frequency.[1]

Standby Mode and Time Keeping Mode

1. *The PLL dynamic contribution depends on the input clock frequency, the number of output clock signals generated by the PLL, and the frequency of each output clock. If a PLL is used to generate more than one output clock, include each output clock in the formula output clock by adding its corresponding contribution (P_{AC14} * F_{CLKOUT} product) to the total PLL contribution.*

P_{PLL} = 0 W

Embedded Nonvolatile Memory Dynamic Contribution—P_{eNVM}

SoC Mode

The eNVM dynamic power consumption is a piecewise linear function of frequency.

$P_{eNVM} = N_{eNVM\text{-}BLOCKS} * \beta_4 * P_{AC15} * F_{READ\text{-}eNVM}$ when $F_{READ\text{-}eNVM} \leq 33$ MHz,

$P_{eNVM} = N_{eNVM\text{-}BLOCKS} * \beta_4 *(P_{AC16} + P_{AC17} * F_{READ\text{-}eNVM})$ when $F_{READ\text{-}eNVM} > 33$ MHz

Where:

$N_{eNVM\text{-}BLOCKS}$ is the number of eNVM blocks used in the design.

β_4 is the eNVM enable rate for read operations. Default is 0 (eNVM mainly in idle state).

$F_{READ\text{-}eNVM}$ is the eNVM read clock frequency.

Standby Mode and Time Keeping Mode

P_{eNVM} = 0 W

Main Crystal Oscillator Dynamic Contribution—$P_{XTL\text{-}OSC}$

SoC Mode

$P_{XTL\text{-}OSC} = P_{AC18}$

Standby Mode

$P_{XTL\text{-}OSC}$ = 0 W

Time Keeping Mode

$P_{XTL\text{-}OSC}$ = 0 W

Low Power Oscillator Crystal Dynamic Contribution—$P_{LPXTAL\text{-}OSC}$

Operating, Standby, and Time Keeping Mode

$P_{LPXTAL\text{-}OSC} = P_{AC21}$

RC Oscillator Dynamic Contribution—$P_{RC\text{-}OSC}$

SoC Mode

$P_{RC\text{-}OSC} = P_{AC19A} + P_{AC19B}$

Standby Mode and Time Keeping Mode

$P_{RC\text{-}OSC}$ = 0 W

Analog System Dynamic Contribution—P_{AB}

SoC Mode

$P_{AB} = P_{AC23} * N_{TM} + P_{AC24} * N_{CM} + P_{AC25} * N_{ABPS} + P_{AC26} * N_{SDD} + P_{AC27} * N_{COMP} + P_{ADC} * N_{ADC} + P_{VR}$

Where:

N_{CM} is the number of current monitor blocks

N_{TM} is the number of temperature monitor blocks

N_{SDD} is the number of sigma-delta DAC blocks

N_{ABPS} is the number of ABPS blocks

N_{ADC} is the number of ADC blocks

N_{COMP} is the number of comparator blocks

$P_{VR} = P_{AC28}$

$P_{ADC} = P_{AC20A} + P_{AC20B}$

Microcontroller Subsystem Dynamic Contribution—P_{MSS}

SoC Mode

$P_{MSS} = P_{AC22}$

Guidelines

Toggle Rate Definition

A toggle rate defines the frequency of a net or logic element relative to a clock. It is a percentage. If the toggle rate of a net is 100%, this means that the net switches at half the clock frequency. Below are some examples:

- The average toggle rate of a shift register is 100%, as all flip-flop outputs toggle at half of the clock frequency.
- The average toggle rate of an 8-bit counter is 25%:
  - Bit 0 (LSB) = 100%
  - Bit 1 = 50%
  - Bit 2 = 25%
  - …
  - Bit 7 (MSB) = 0.78125%
  - Average toggle rate = (100% + 50% + 25% + 12.5% + . . . 0.78125%) / 8.

Enable Rate Definition

Output enable rate is the average percentage of time during which tristate outputs are enabled. When non-tristate output buffers are used, the enable rate should be 100%.

***Table 2-17* • Toggle Rate Guidelines Recommended for Power Calculation**

Component	Definition	Guideline
α_1	Toggle rate of VersaTile outputs	10%
α_2	I/O buffer toggle rate	10%

***Table 2-18* • Enable Rate Guidelines Recommended for Power Calculation**

Component	Definition	Guideline
β_1	I/O output buffer enable rate	Toggle rate of the logic driving the output buffer
β_2	FPGA fabric SRAM enable rate for read operations	12.5%
β_3	FPGA fabric SRAM enable rate for write operations	12.5%
β_4	eNVM enable rate for read operations	< 5%

User I/O Characteristics

Timing Model

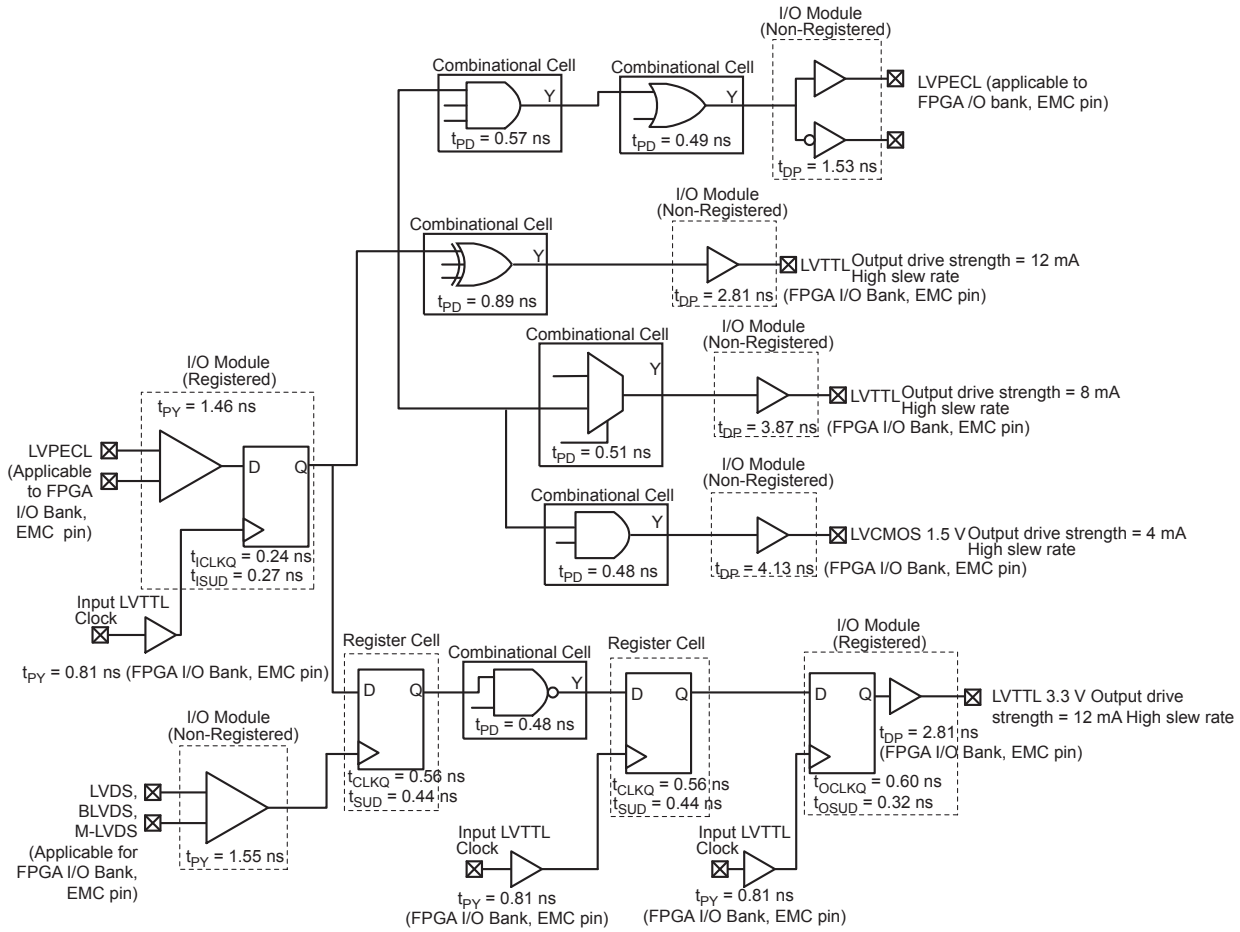

Figure 2-2 • **Timing Model**
Operating Conditions: –1 Speed, Commercial Temperature Range (T_J = 85°C),
Worst Case VCC = 1.425 V

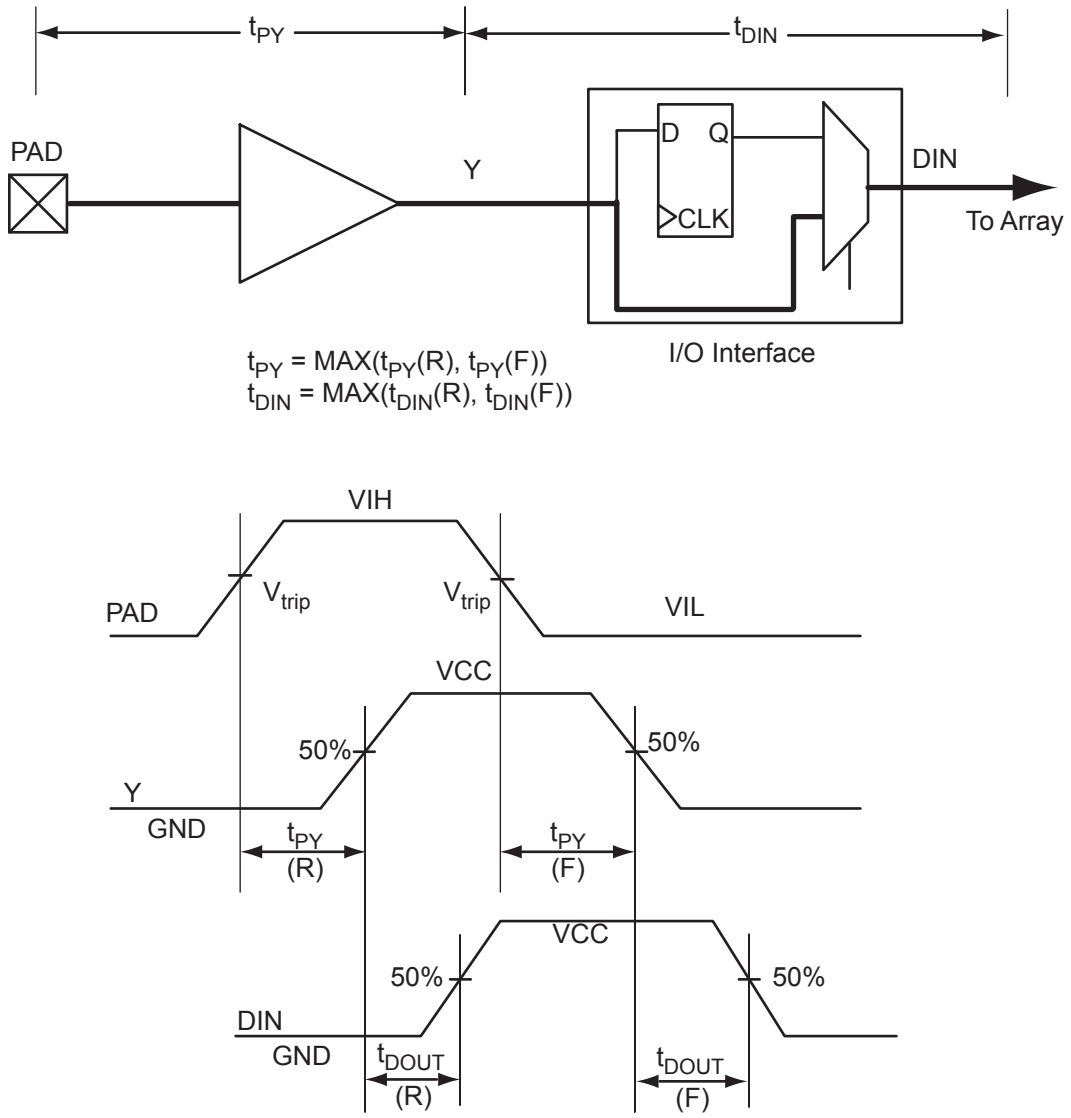

Figure 2-3 • **Input Buffer Timing Model and Delays (example)**

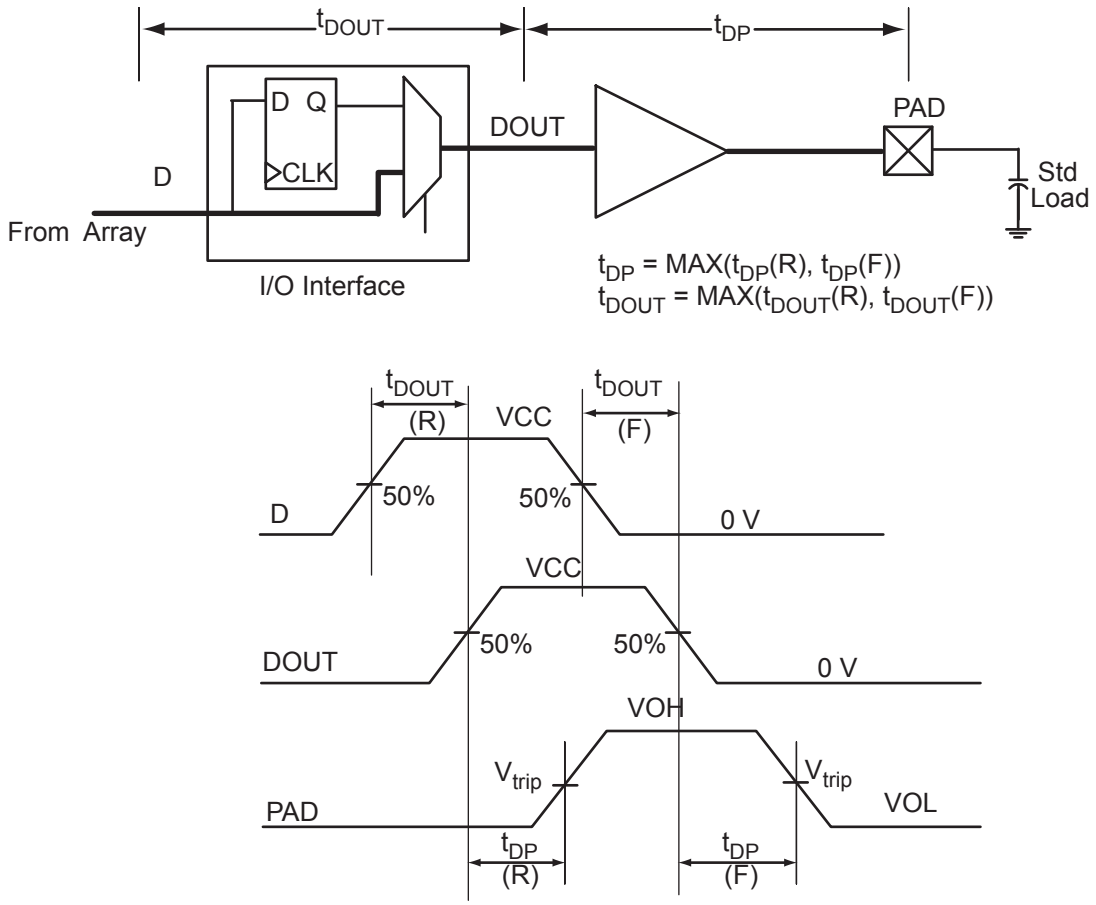

Figure 2-4 • **Output Buffer Model and Delays (example)**

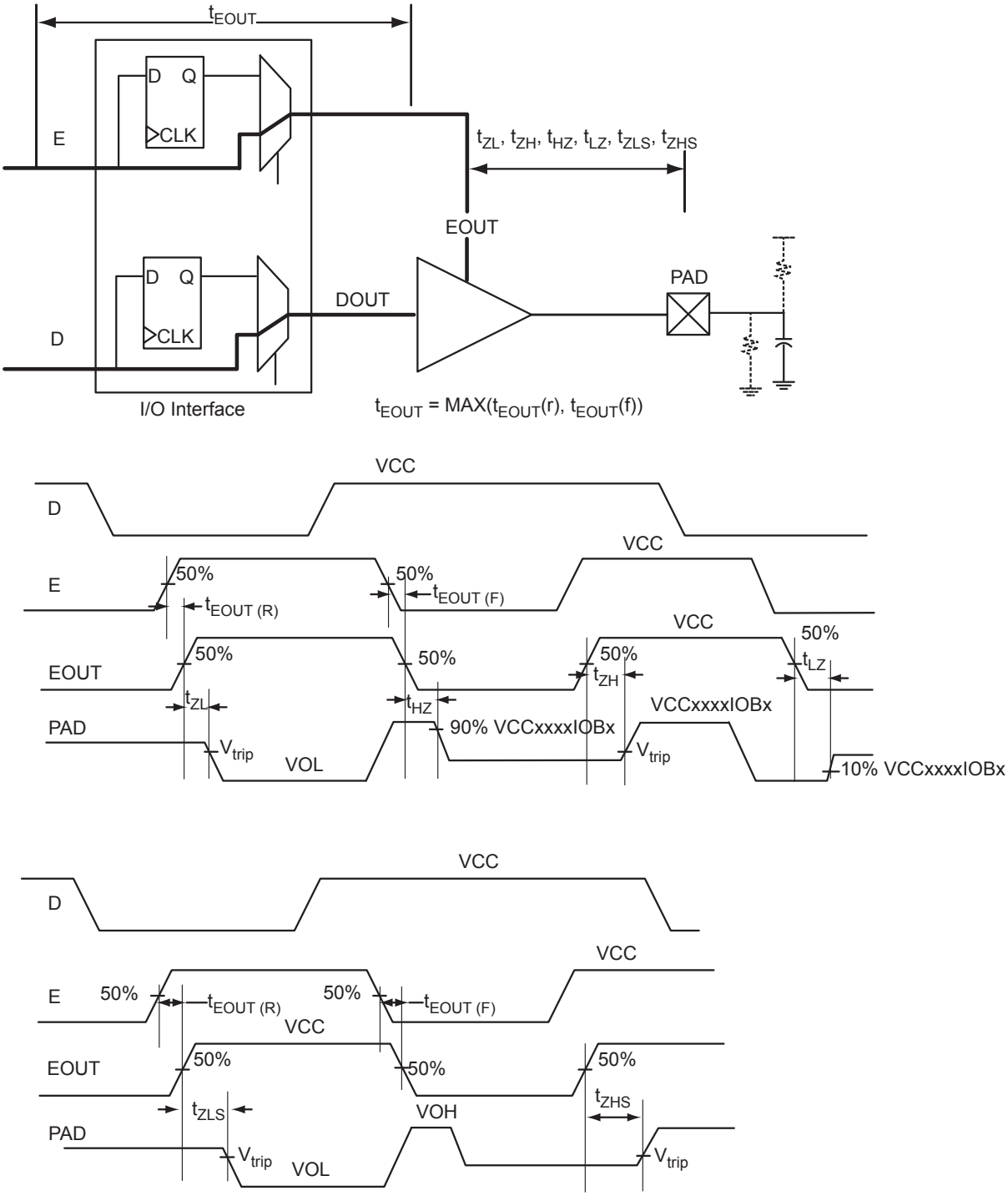

Figure 2-5 • **Tristate Output Buffer Timing Model and Delays (example)**

Overview of I/O Performance

Summary of I/O DC Input and Output Levels – Default I/O Software Settings

***Table 2-19* • Summary of Maximum and Minimum DC Input and Output Levels Applicable to Commercial Conditions—Software Default Settings Applicable to FPGA I/O Banks**

			VIL		VIH		VOL	VOH	I_{OL}[1]	I_{OH}[1]
I/O Standard	**Drive Strgth.**	**Slew Rate**	**Min. V**	**Max. V**	**Min. V**	**Max. V**	**Max. V**	**Min. V**	**mA**	**mA**
3.3 V LVTTL / 3.3 V LVCMOS	12 mA	High	–0.3	0.8	2	3.6	0.4	2.4	12	12
2.5 V LVCMOS	12 mA	High	–0.3	0.7	1.7	3.6	0.7	1.7	12	12
1.8 V LVCMOS	12 mA	High	–0.3	0.35 * VCCxxxxIOBx	0.65* VCCxxxxIOBx	3.6	0.45	VCCxxxxIOBx – 0.45	12	12
1.5 V LVCMOS	12 mA	High	–0.3	0.35 * VCCxxxxIOBx	0.65* VCCxxxxIOBx	3.6	0.25 * VCCxxxxIOBx	0.75* VCCxxxxIOBx	12	12
3.3 V PCI	Per PCI specifications									
3.3 V PCI-X	Per PCI-X specifications									

Notes:

1. *Currents are measured at 85°C junction temperature.*
2. *Output slew rate can be extracted by the IBIS Models.*

***Table 2-20* • Summary of Maximum and Minimum DC Input and Output Levels Applicable to Commercial Conditions—Software Default Settings Applicable to MSS I/O Banks**

			VIL		VIH		VOL	VOH	I_{OL}[1]	I_{OH}[1]
I/O Standard	**Drive Strgth.**	**Slew Rate**	**Min. V**	**Max. V**	**Min. V**	**Max. V**	**Max. V**	**Min. V**	**mA**	**mA**
3.3 V LVTTL / 3.3 V LVCMOS	8 mA	High	–0.3	0.8	2	3.6	0.4	2.4	8	8
2.5 V LVCMOS	8 mA	High	–0.3	0.7	1.7	3.6	0.7	1.7	8	8
1.8 V LVCMOS	4 mA	High	–0.3	0.35* VCCxxxxIOBx	0.65* VCCxxxxIOBx	3.6	0.45	VCCxxxxIOBx – 0.45	4	4
1.5 V LVCMOS	2 mA	High	–0.3	0.35* VCCxxxxIOBx	0.65* VCCxxxxIOBx	3.6	0.25* VCCxxxxIOBx	0.75* VCCxxxxIOBx	2	2

Notes:

1. *Currents are measured at 85°C junction temperature.*
2. *Output slew rate can be extracted by the IBIS Models.*

***Table 2-21* • Summary of Maximum and Minimum DC Input Levels Applicable to Commercial Conditions in all I/O Bank Types**

DC I/O Standards	Commercial	
	I_{IL}	I_{IH}
	µA	µA
3.3 V LVTTL / 3.3 V LVCMOS	15	15
2.5 V LVCMOS	15	15
1.8 V LVCMOS	15	15
1.5 V LVCMOS	15	15
3.3 V PCI	15	15
3.3 V PCI-X	15	15

Summary of I/O Timing Characteristics – Default I/O Software Settings

***Table 2-22* • Summary of AC Measuring Points Applicable to All I/O Bank Types**

Standard	Measuring Trip Point (V_{trip})
3.3 V LVTTL / 3.3 V LVCMOS	1.4 V
2.5 V LVCMOS	1.2 V
1.8 V LVCMOS	0.90 V
1.5 V LVCMOS	0.75 V
3.3 V PCI	0.285 * VCCxxxxIOBx (RR)
	0.615 * VCCxxxxIOBx (FF)
3.3 V PCI-X	0.285 * VCCxxxxIOBx (RR)
	0.615 * VCCxxxxIOBx (FF)
LVDS	Cross point
LVPECL	Cross point

***Table 2-23* • I/O AC Parameter Definitions**

Parameter	Parameter Definition
t_{DP}	Data to pad delay through the output buffer
t_{PY}	Pad to data delay through the input buffer
t_{DOUT}	Data to output buffer delay through the I/O interface
t_{EOUT}	Enable to output buffer tristate control delay through the I/O interface
t_{DIN}	Input buffer to data delay through the I/O interface
t_{HZ}	Enable to pad delay through the output buffer—High to Z
t_{ZH}	Enable to pad delay through the output buffer—Z to High
t_{LZ}	Enable to pad delay through the output buffer—Low to Z
t_{ZL}	Enable to pad delay through the output buffer—Z to Low
t_{ZHS}	Enable to pad delay through the output buffer with delayed enable—Z to High
t_{ZLS}	Enable to pad delay through the output buffer with delayed enable—Z to Low

***Table 2-24* • Summary of I/O Timing Characteristics—Software Default Settings**
–1 Speed Grade, Worst Commercial-Case Conditions: T_J = 85°C, Worst Case VCC = 1.425 V,
Worst-Case VCCxxxxIOBx (per standard)
Applicable to FPGA I/O Banks, Assigned to EMC I/O Pins

I/O Standard	Drive Strength	Slew Rate	Capacitive Load (pF)	External Resistor (Ω)	t_{DOUT} (ns)	t_{DP} (ns)	t_{DIN} (ns)	t_{PY} (ns)	t_{EOUT} (ns)	t_{ZL} (ns)	t_{ZH} (ns)	t_{LZ} (ns)	t_{HZ} (ns)	t_{ZLS} (ns)	t_{ZHS} (ns)	Units
3.3 V LVTTL / 3.3 V LVCMOS	12 mA	High	35	–	0.50	2.81	0.03	0.81	0.32	2.86	2.23	2.55	2.82	4.58	3.94	ns
2.5 V LVCMOS	12 mA	High	35	–	0.50	2.73	0.03	1.03	0.32	2.88	2.69	2.62	2.70	4.60	4.41	ns
1.8 V LVCMOS	12 mA	High	35	–	0.50	2.81	0.03	0.95	0.32	2.87	2.38	2.92	3.18	4.58	4.10	ns
1.5 V LVCMOS	12 mA	High	35	–	0.50	3.24	0.03	1.12	0.32	3.30	2.79	3.10	3.27	5.02	4.50	ns
3.3 V PCI	Per PCI spec	High	10	25[1]	0.50	2.11	0.03	0.68	0.32	2.15	1.57	2.55	2.82	3.87	3.28	ns
3.3 V PCI-X	Per PCI-X spec	High	10	25[1]	0.50	2.11	0.03	0.64	0.32	2.15	1.57	2.55	2.82	3.87	3.28	ns
LVDS	24 mA	High	–	–	0.50	1.53	0.03	1.55	–	–	–	–	–	–	–	ns
LVPECL	24 mA	High	–	–	0.50	1.46	0.03	1.46	–	–	–	–	–	–	–	ns

Notes:

1. *Resistance is used to measure I/O propagation delays as defined in PCI specifications. See Figure 2-10 on page 2-39 for connectivity. This resistor is not required during normal operation.*
2. *For specific junction temperature and voltage supply levels, refer to Table 2-7 on page 2-9 for derating values.*

***Table 2-25* • Summary of I/O Timing Characteristics—Software Default Settings**
–1 Speed Grade, Worst Commercial-Case Conditions: T_J = 85°C, Worst Case VCC = 1.425 V,
Worst-Case VCCxxxxIOBx (per standard)
Applicable to MSS I/O Banks

I/O Standard	Drive Strength	Slew Rate	Capacitive Load (pF)	External Resistor	t_{DOUT} (ns)	t_{DP} (ns)	t_{DIN} (ns)	t_{PY} (ns)	t_{PYS} (ns)	t_{EOUT} (ns)	t_{ZL} (ns)	t_{ZH} (ns)	t_{LZ} (ns)	t_{HZ} (ns)	Units
3.3 V LVTTL / 3.3 V LVCMOS	8 mA	High	10	–	0.18	1.92	0.07	0.78	1.09	0.18	1.96	1.55	1.83	2.04	ns
2.5 V LVCMOS	8 mA	High	10	–	0.18	1.96	0.07	0.99	1.16	0.18	2.00	1.82	1.82	1.93	ns
1.8 V LVCMOS	4 mA	High	10	–	0.18	2.31	0.07	0.91	1.37	0.18	2.35	2.27	1.84	1.87	ns
1.5 V LVCMOS	2 mA	High	10	–	0.18	2.70	0.07	1.07	1.55	0.18	2.75	2.67	1.87	1.85	ns

Notes:

1. *Resistance is used to measure I/O propagation delays as defined in PCI specifications. See Figure 2-10 on page 2-39 for connectivity. This resistor is not required during normal operation.*
2. *For specific junction temperature and voltage supply levels, refer to Table 2-7 on page 2-9 for derating values.*

Detailed I/O DC Characteristics

***Table 2-26* • Input Capacitance**

Symbol	Definition	Conditions	Min.	Max.	Units
C_{IN}	Input capacitance	V_{IN} = 0, f = 1.0 MHz		8	pF
C_{INCLK}	Input capacitance on the clock pin	V_{IN} = 0, f = 1.0 MHz		8	pF

***Table 2-27* • I/O Output Buffer Maximum Resistances[1]**
Applicable to FPGA I/O Banks

Standard	Drive Strength	$R_{PULL\text{-}DOWN}$ (Ω)[2]	$R_{PULL\text{-}UP}$ (Ω)[3]
3.3 V LVTTL / 3.3 V LVCMOS	2 mA	100	300
	4 mA	100	300
	6 mA	50	150
	8 mA	50	150
	12 mA	25	75
	16 mA	17	50
	24 mA	11	33
2.5 V LVCMOS	2 mA	100	200
	4 mA	100	200
	6 mA	50	100
	8 mA	50	100
	12 mA	25	50
	16 mA	20	40
	24 mA	11	22
1.8 V LVCMOS	2 mA	200	225
	4 mA	100	112
	6 mA	50	56
	8 mA	50	56
	12 mA	20	22
	16 mA	20	22
1.5 V LVCMOS	2 mA	200	224
	4 mA	100	112
	6 mA	67	75
	8 mA	33	37
	12 mA	33	37
3.3 V PCI/PCI-X	Per PCI/PCI-X specification	25	75

Notes:

1. *These maximum values are provided for information only. Minimum output buffer resistance values depend on VCCxxxxIOBx, drive strength selection, temperature, and process. For board design considerations and detailed output buffer resistances, use the corresponding IBIS models located on the Microsemi SoC Products Group website at http://www.microsemi.com/soc/download/ibis/default.aspx (also generated by the SoC Products Group Libero SoC toolset).*
2. $R_{(PULL\text{-}DOWN\text{-}MAX)} = (V_{OLspec}) / I_{OLspec}$
3. $R_{(PULL\text{-}UP\text{-}MAX)} = (V_{CCImax} – V_{OHspec}) / I_{OHspec}$

***Table 2-28* • I/O Output Buffer Maximum Resistances[1]**
Applicable to MSS I/O Banks

Standard	Drive Strength	$R_{PULL\text{-}DOWN}$ (Ω)[2]	$R_{PULL\text{-}UP}$ (Ω)[3]
3.3 V LVTTL / 3.3 V LVCMOS	8mA	50	150
2.5 V LVCMOS	8 mA	50	100
1.8 V LVCMOS	4 mA	100	112
1.5 V LVCMOS	2 mA	200	224

Notes:

1. *These maximum values are provided for informational reasons only. Minimum output buffer resistance values depend on VCCxxxxIOBx, drive strength selection, temperature, and process. For board design considerations and detailed output buffer resistances, use the corresponding IBIS models located on the SoC Products Group website at http://www.microsemi.com/soc/download/ibis/default.aspx.*
2. $R_{(PULL\text{-}DOWN\text{-}MAX)} = (V_{OLspec}) / I_{OLspec}$
3. $R_{(PULL\text{-}UP\text{-}MAX)} = (V_{CCImax} – V_{OHspec}) / I_{OHspec}$

***Table 2-29* • I/O Weak Pull-Up/Pull-Down Resistances**
Minimum and Maximum Weak Pull-Up/Pull-Down Resistance Values

	$R_{(WEAK\ PULL\text{-}UP)}$[1] (Ω)		$R_{(WEAK\ PULL\text{-}DOWN)}$[2] (Ω)	
VCCxxxxIOBx	**Min.**	**Max.**	**Min.**	**Max.**
3.3 V	10 k	45 k	10 k	45 k
2.5 V	11 k	55 k	12 k	74 k
1.8 V	18 k	70 k	17 k	110 k
1.5 V	19 k	90 k	19 k	140 k

Notes:

1. $R_{(WEAK\ PULL\text{-}UP\text{-}MAX)} = (VCCImax – VOHspec) / I_{(WEAK\ PULL\text{-}UP\text{-}MIN)}$
2. $R_{(WEAK\ PULL\text{-}DOWN\text{-}MAX)} = (VOLspec) / I_{(WEAK\ PULL\text{-}DOWN\text{-}MIN)}$

***Table 2-30* • I/O Short Currents I_{OSH}/I_{OSL} Applicable to FPGA I/O Banks**

	Drive Strength	I_{OSL} (mA)*	I_{OSH} (mA)*
3.3 V LVTTL / 3.3 V LVCMOS	2 mA	27	25
	4 mA	27	25
	6 mA	54	51
	8 mA	54	51
	12 mA	109	103
	16 mA	127	132
	24 mA	181	268
2.5 V LVCMOS	2 mA	18	16
	4 mA	18	16
	6 mA	37	32
	8 mA	37	32
	12 mA	74	65
	16 mA	87	83
	24 mA	124	169
1.8 V LVCMOS	2 mA	11	9
	4 mA	22	17
	6 mA	44	35
	8 mA	51	45
	12 mA	74	91
	16 mA	74	91
1.5 V LVCMOS	2 mA	16	13
	4 mA	33	25
	6 mA	39	32
	8 mA	55	66
	12 mA	55	66
3.3 V PCI/PCI-X	Per PCI/PCI-X specification	109	103

*Note: *T_J = 85°C.*

***Table 2-31* • I/O Short Currents I_{OSH}/I_{OSL} Applicable to MSS I/O Banks**

	Drive Strength	I_{OSL} (mA)*	I_{OSH} (mA)*
3.3 V LVTTL / 3.3 V LVCMOS	8 mA	54	51
2.5 V LVCMOS	8 mA	37	32
1.8 V LVCMOS	4 mA	22	17
1.5 V LVCMOS	2 mA	16	13

*Note: *T_J = 85°C*

The length of time an I/O can withstand I_{OSH}/I_{OSL} events depends on the junction temperature. The reliability data below is based on a 3.3 V, 12 mA I/O setting, which is the worst case for this type of analysis.

For example, at 100°C, the short current condition would have to be sustained for more than 2200 operation hours to cause a reliability concern. The I/O design does not contain any short circuit protection, but such protection would only be needed in extremely prolonged stress conditions.

***Table 2-32* • Duration of Short Circuit Event before Failure**

Temperature	Time before Failure
–40°C	> 20 years
0°C	> 20 years
25°C	> 20 years
70°C	5 years
85°C	2 years
100°C	6 months

***Table 2-33* • Schmitt Trigger Input Hysteresis**
Hysteresis Voltage Value (typical) for Schmitt Mode Input Buffers

Input Buffer Configuration	Hysteresis Value (typical)
3.3 V LVTTL / LVCMOS / PCI / PCI-X (Schmitt trigger mode)	240 mV
2.5 V LVCMOS (Schmitt trigger mode)	140 mV
1.8 V LVCMOS (Schmitt trigger mode)	80 mV
1.5 V LVCMOS (Schmitt trigger mode)	60 mV

***Table 2-34* • I/O Input Rise Time, Fall Time, and Related I/O Reliability**

Input Buffer	Input Rise/Fall Time (min.)	Input Rise/Fall Time (max.)	Reliability
LVTTL/LVCMOS	No requirement	10 ns *	20 years (100°C)
LVDS/B-LVDS/ M-LVDS/LVPECL	No requirement	10 ns *	10 years (100°C)

*Note: *The maximum input rise/fall time is related to the noise induced into the input buffer trace. If the noise is low, then the rise time and fall time of input buffers can be increased beyond the maximum value. The longer the rise/fall times, the more susceptible the input signal is to the board noise. Microsemi SoC Products Group recommends signal integrity evaluation/characterization of the system to ensure that there is no excessive noise coupling into input signals.*

Single-Ended I/O Characteristics

3.3 V LVTTL / 3.3 V LVCMOS

Low-Voltage Transistor–Transistor Logic (LVTTL) is a general-purpose standard (EIA/JESD) for 3.3 V applications. It uses an LVTTL input buffer and push-pull output buffer.

***Table 2-35* • Minimum and Maximum DC Input and Output Levels Applicable to FPGA I/O Banks**

3.3 V LVTTL / 3.3 V LVCMOS	VIL		VIH		VOL	VOH	I_{OL}	I_{OH}	I_{OSL}	I_{OSH}	I_{IL}	I_{IH}
Drive Strength	Min. V	Max. V	Min. V	Max. V	Max. V	Min. V	mA	mA	Max. mA[1]	Max. mA[1]	µA[2]	µA[2]
2 mA	–0.3	0.8	2	3.6	0.4	2.4	2	2	27	25	15	15
4 mA	–0.3	0.8	2	3.6	0.4	2.4	4	4	27	25	15	15
6 mA	–0.3	0.8	2	3.6	0.4	2.4	6	6	54	51	15	15
8 mA	–0.3	0.8	2	3.6	0.4	2.4	8	8	54	51	15	15
12 mA	–0.3	0.8	2	3.6	0.4	2.4	12	12	109	103	15	15
16 mA	–0.3	0.8	2	3.6	0.4	2.4	16	16	127	132	15	15
24 mA	–0.3	0.8	2	3.6	0.4	2.4	24	24	181	268	10	10

Notes:

1. *Currents are measured at 100°C junction temperature and maximum voltage.*
2. *Currents are measured at 85°C junction temperature.*
3. *Software default selection highlighted in gray.*

***Table 2-36* • Minimum and Maximum DC Input and Output Levels Applicable to MSS I/O Banks**

3.3 V LVTTL / 3.3 V LVCMOS	VIL		VIH		VOL	VOH	I_{OL}	I_{OH}	I_{OSL}	I_{OSH}	I_{IL}	I_{IH}
Drive Strength	Min. V	Max. V	Min. V	Max. V	Max. V	Min. V	mA	mA	Max. mA[1]	Max. mA[1]	µA[2]	µA[2]
8 mA	–0.3	0.8	2	3.6	0.4	2.4	8	8	54	51	15	15

Notes:

1. *Currents are measured at 100°C junction temperature and maximum voltage.*
2. *Currents are measured at 85°C junction temperature.*
3. *Software default selection highlighted in gray.*

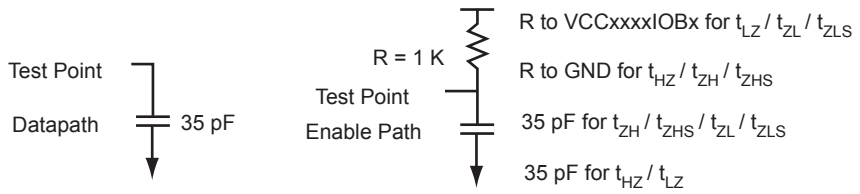

***Figure 2-6* • AC Loading**

***Table 2-37* • AC Waveforms, Measuring Points, and Capacitive Loads**

Input Low (V)	Input High (V)	Measuring Point* (V)	V_{REF} (typ.) (V)	C_{LOAD} (pF)
0	3.3	1.4	–	35

*Note: *Measuring point = V_{trip}. See Table 2-22 on page 2-24 for a complete table of trip points.*

Timing Characteristics

***Table 2-38* • 3.3 V LVTTL / 3.3 V LVCMOS High Slew**
Worst Commercial-Case Conditions: T_J = 85°C, Worst-Case VCC = 1.425 V,
Worst-Case VCCxxxxIOBx = 3.0 V
Applicable to FPGA I/O Banks, I/O Assigned to EMC I/O Pins

Drive Strength	Speed Grade	t_{DOUT}	t_{DP}	t_{DIN}	t_{PY}	t_{EOUT}	t_{ZL}	t_{ZH}	t_{LZ}	t_{HZ}	t_{ZLS}	t_{ZHS}	Units
4 mA	Std.	0.60	7.20	0.04	0.97	0.39	7.34	6.18	2.52	2.46	9.39	8.23	ns
	–1	0.50	6.00	0.03	0.81	0.32	6.11	5.15	2.10	2.05	7.83	6.86	ns
8 mA	Std.	0.60	4.64	0.04	0.97	0.39	4.73	3.84	2.85	3.02	6.79	5.90	ns
	–1	0.50	3.87	0.03	0.81	0.32	3.94	3.20	2.37	2.52	5.65	4.91	ns
12 mA	Std.	0.60	3.37	0.04	0.97	0.39	3.43	2.67	3.07	3.39	5.49	4.73	ns
	–1	0.50	2.81	0.03	0.81	0.32	2.86	2.23	2.55	2.82	4.58	3.94	ns
16 mA	Std.	0.60	3.18	0.04	0.97	0.39	3.24	2.43	3.11	3.48	5.30	4.49	ns
	–1	0.50	2.65	0.03	0.81	0.32	2.70	2.03	2.59	2.90	4.42	3.74	ns
24 mA	Std.	0.60	2.93	0.04	0.97	0.39	2.99	2.03	3.17	3.83	5.05	4.09	ns
	–1	0.50	2.45	0.03	0.81	0.32	2.49	1.69	2.64	3.19	4.21	3.41	ns

Notes:

1. *Software default selection highlighted in gray.*
2. *For specific junction temperature and voltage supply levels, refer to Table 2-7 on page 2-9 for derating values.*

***Table 2-39* • 3.3 V LVTTL / 3.3 V LVCMOS Low Slew**
Worst Commercial-Case Conditions: T_J = 85°C, Worst-Case VCC = 1.425 V,
Worst-Case VCCxxxxIOBx = 3.0 V
Applicable to FPGA I/O Banks, I/O Assigned to EMC I/O Pins

Drive Strength	Speed Grade	t_{DOUT}	t_{DP}	t_{DIN}	t_{PY}	t_{EOUT}	t_{ZL}	t_{ZH}	t_{LZ}	t_{HZ}	t_{ZLS}	t_{ZHS}	Units
4 mA	Std.	0.60	9.75	0.04	0.97	0.39	9.93	8.22	2.52	2.31	11.99	10.28	ns
	–1	0.50	8.12	0.03	0.81	0.32	8.27	6.85	2.10	1.93	9.99	8.57	ns
8 mA	Std.	0.60	6.96	0.04	0.97	0.39	7.09	5.85	2.84	2.87	9.15	7.91	ns
	–1	0.50	5.80	0.03	0.81	0.32	5.91	4.88	2.37	2.39	7.62	6.59	ns
12 mA	Std.	0.60	5.35	0.04	0.97	0.39	5.45	4.58	3.06	3.23	7.51	6.64	ns
	–1	0.50	4.46	0.03	0.81	0.32	4.54	3.82	2.55	2.69	6.26	5.53	ns
16 mA	Std.	0.60	5.01	0.04	0.97	0.39	5.10	4.30	3.11	3.32	7.16	6.36	ns
	–1	0.50	4.17	0.03	0.81	0.32	4.25	3.58	2.59	2.77	5.97	5.30	ns
24 mA	Std.	0.60	4.67	0.04	0.97	0.39	4.75	4.28	3.16	3.66	6.81	6.34	ns
	–1	0.50	3.89	0.03	0.81	0.32	3.96	3.57	2.64	3.05	5.68	5.28	ns

Note: For specific junction temperature and voltage supply levels, refer to Table 2-7 on page 2-9 for derating values.

***Table 2-40* • 3.3 V LVTTL / 3.3 V LVCMOS High Slew**
Worst Commercial-Case Conditions: T_J = 85°C, Worst-Case VCC = 1.425 V,
Worst-Case VCCxxxxIOBx = 3.0 V
Applicable to MSS I/O Banks

Drive Strength	Speed Grade	t_{DOUT}	t_{DP}	t_{DIN}	t_{PY}	t_{PYS}	t_{EOUT}	t_{ZL}	t_{ZH}	t_{LZ}	t_{HZ}	Units
8 mA	Std.	0.22	2.31	0.09	0.94	1.30	0.22	2.35	1.86	2.20	2.45	ns
	–1	0.18	1.92	0.07	0.78	1.09	0.18	1.96	1.55	1.83	2.04	ns

Notes:

1. *Software default selection highlighted in gray.*
2. *For specific junction temperature and voltage supply levels, refer to Table 2-7 on page 2-9 for derating values.*

2.5 V LVCMOS

Low-Voltage CMOS for 2.5 V is an extension of the LVCMOS standard (JESD8-5) used for general-purpose 2.5 V applications.

***Table 2-41* • Minimum and Maximum DC Input and Output Levels Applicable to FPGA I/O Banks**

2.5 V LVCMOS	VIL		VIH		VOL	VOH	I_{OL}	I_{OH}	I_{OSL}	I_{OSH}	I_{IL}	I_{IH}
Drive Strength	Min. V	Max. V	Min. V	Max. V	Max. V	Min. V	mA	mA	Max. mA[1]	Max. mA[1]	µA[2]	µA[2]
2 mA	–0.3	0.7	1.7	2.7	0.7	1.7	2	2	18	16	15	15
4 mA	–0.3	0.7	1.7	2.7	0.7	1.7	4	4	18	16	15	15
6 mA	–0.3	0.7	1.7	2.7	0.7	1.7	6	6	37	32	15	15
8 mA	–0.3	0.7	1.7	2.7	0.7	1.7	8	8	37	32	15	15
12 mA	–0.3	0.7	1.7	2.7	0.7	1.7	12	12	74	65	15	15
16 mA	–0.3	0.7	1.7	2.7	0.7	1.7	16	16	87	83	15	15
24 mA	–0.3	0.7	1.7	2.7	0.7	1.7	24	24	124	169	15	15

Notes:

1. *Currents are measured at high temperature (100°C junction temperature) and maximum voltage.*
2. *Currents are measured at 85°C junction temperature.*
3. *Software default selection highlighted in gray.*

***Table 2-42* • Minimum and Maximum DC Input and Output Levels Applicable to MSS I/O Banks**

2.5 V LVCMOS	VIL		V_{IH}		VOL	VOH	I_{OL}	I_{OH}	I_{OSL}	I_{OSH}	I_{IL}	I_{IH}
Drive Strength	Min. V	Max. V	Min. V	Max. V	Max. V	Min. V	mA	mA	Max. mA[1]	Max., mA[1]	µA[2]	µA[2]
8 mA	–0.3	0.7	1.7	3.6	0.7	1.7	8	8	37	32	15	15

Notes:

1. *Currents are measured at high temperature (100°C junction temperature) and maximum voltage.*
2. *Currents are measured at 85°C junction temperature.*
3. *Software default selection highlighted in gray.*

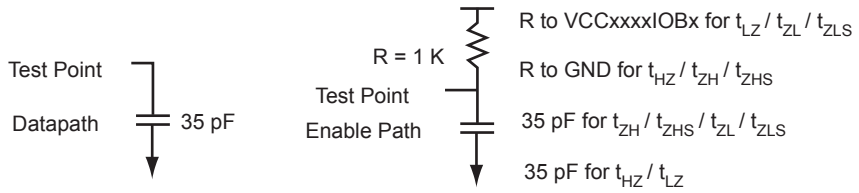

***Figure 2-7* • AC Loading**

***Table 2-43* • AC Waveforms, Measuring Points, and Capacitive Loads**

Input Low (V)	Input High (V)	Measuring Point* (V)	V_{REF} (typ.) (V)	C_{LOAD} (pF)
0	2.5	1.2	–	35

* *Measuring point = V_{trip}. See Table 2-22 on page 2-24 for a complete table of trip points.*

Timing Characteristics

***Table 2-44* • 2.5 V LVCMOS High Slew**
Worst Commercial-Case Conditions: T_J = 85°C, Worst-Case VCC = 1.425 V,
Worst-Case VCCxxxxIOBx = 2.3 V
Applicable to FPGA I/O Banks, I/O Assigned to EMC I/O Pins

Drive Strength	Speed Grade	t_{DOUT}	t_{DP}	t_{DIN}	t_{PY}	t_{EOUT}	t_{ZL}	t_{ZH}	t_{LZ}	t_{HZ}	t_{ZLS}	t_{ZHS}	Units
4 mA	Std.	0.55	8.10	0.04	1.23	0.39	7.37	8.10	2.54	2.17	9.43	10.15	ns
	–1	0.46	6.75	0.03	1.03	0.32	6.14	6.75	2.12	1.81	7.85	8.46	ns
8 mA	Std.	0.55	4.85	0.04	1.23	0.39	4.76	4.85	2.90	2.83	6.82	6.91	ns
	–1	0.46	4.04	0.03	1.03	0.32	3.97	4.04	2.42	2.36	5.68	5.76	ns
12 mA	Std.	0.60	3.28	0.04	1.23	0.39	3.46	3.23	3.15	3.24	5.52	5.29	ns
	–1	0.50	2.73	0.03	1.03	0.32	2.88	2.69	2.62	2.70	4.60	4.41	ns
16 mA	Std.	0.60	3.09	0.04	1.23	0.39	3.27	2.88	3.20	3.35	5.33	4.94	ns
	–1	0.50	2.57	0.03	1.03	0.32	2.72	2.40	2.67	2.79	4.44	4.12	ns
24 mA	Std.	0.60	2.95	0.04	1.23	0.39	3.01	2.31	3.27	3.76	5.07	4.37	ns
	–1	0.50	2.46	0.03	1.03	0.32	2.51	1.93	2.73	3.13	4.22	3.64	ns

Notes:

1. *Software default selection highlighted in gray.*
2. *For specific junction temperature and voltage supply levels, refer to Table 2-7 on page 2-9 for derating values.*

***Table 2-45* • 2.5 V LVCMOS Low Slew**
Worst Commercial-Case Conditions: T_J = 85°C, Worst-Case VCC = 1.425 V,
Worst-Case VCCxxxxIOBx = 2.3 V
Applicable to FPGA I/O Banks, I/O Assigned to EMC I/O Pins

Drive Strength	Speed Grade	t_{DOUT}	t_{DP}	t_{DIN}	t_{PY}	t_{EOUT}	t_{ZL}	t_{ZH}	t_{LZ}	t_{HZ}	t_{ZLS}	t_{ZHS}	Units
4 mA	Std.	0.55	10.50	0.04	1.23	0.39	10.69	10.50	2.54	2.07	12.75	12.56	ns
	–1	0.46	8.75	0.03	1.03	0.32	8.91	8.75	2.12	1.73	10.62	10.47	ns
8 mA	Std.	0.55	7.61	0.04	1.23	0.39	7.46	7.19	2.81	2.66	9.52	9.25	ns
	–1	0.46	6.34	0.03	1.03	0.32	6.22	5.99	2.34	2.22	7.93	7.71	ns
12 mA	Std.	0.60	5.92	0.04	1.23	0.39	5.79	5.45	3.04	3.06	7.85	7.51	ns
	–1	0.50	4.93	0.03	1.03	0.32	4.83	4.54	2.53	2.55	6.54	6.26	ns
16 mA	Std.	0.60	5.53	0.04	1.23	0.39	5.40	5.09	3.09	3.16	7.46	7.14	ns
	–1	0.50	4.61	0.03	1.03	0.32	4.50	4.24	2.58	2.64	6.22	5.95	ns
24 mA	Std.	0.60	5.18	0.04	1.23	0.39	5.28	5.14	3.27	3.64	7.34	7.20	ns
	–1	0.50	4.32	0.03	1.03	0.32	4.40	4.29	2.72	3.03	6.11	6.00	ns

Note: For specific junction temperature and voltage supply levels, refer to Table 2-7 on page 2-9 for derating values.

***Table 2-46* • 2.5 V LVCMOS High Slew**
Worst Commercial-Case Conditions: T_J = 85°C, Worst-Case VCC = 1.425 V,
Worst-Case VCCxxxxIOBx = 3.0 V
Applicable to MSS I/O Banks

Drive Strength	Speed Grade	t_{DOUT}	t_{DP}	t_{DIN}	t_{PY}	t_{PYS}	t_{EOUT}	t_{ZL}	t_{ZH}	t_{LZ}	t_{HZ}	Units
8 mA	Std.	0.22	2.35	0.09	1.18	1.39	0.22	2.40	2.18	2.19	2.32	ns
	–1	0.18	1.96	0.07	0.99	1.16	0.18	2.00	1.82	1.82	1.93	ns

Notes:

1. *Software default selection highlighted in gray.*
2. *For specific junction temperature and voltage supply levels, refer to Table 2-7 on page 2-9 for derating values.*

1.8 V LVCMOS

Low-voltage CMOS for 1.8 V is an extension of the LVCMOS standard (JESD8-5) used for general-purpose 1.8 V applications. It uses a 1.8 V input buffer and a push-pull output buffer.

***Table 2-47* • Minimum and Maximum DC Input and Output Levels Applicable to FPGA I/O Banks**

1.8 V LVCMOS	VIL		VIH		VOL	VOH	I_{OL}	I_{OH}	I_{OSL}	I_{OSH}	I_{IL}	I_{IH}
Drive Strength	Min. V	Max. V	Min. V	Max. V	Max. V	Min. V	mA	mA	Max. mA[1]	Max. mA[1]	µA[2]	µA[2]
2 mA	–0.3	0.35 * VCCxxxxIOBx	0.65 * VCCxxxxIOBx	1.9	0.45	VCCxxxxIOBx – 0.45	2	2	11	9	15	15
4 mA	–0.3	0.35 * VCCxxxxIOBx	0.65 * VCCxxxxIOBx	1.9	0.45	VCCxxxxIOBx – 0.45	4	4	22	17	15	15
6 mA	–0.3	0.35 * VCCxxxxIOBx	0.65 * VCCxxxxIOBx	1.9	0.45	VCCxxxxIOBx – 0.45	6	6	44	35	15	15
8 mA	–0.3	0.35 * VCCxxxxIOBx	0.65 * VCCxxxxIOBx	1.9	0.45	VCCxxxxIOBx – 0.45	8	8	51	45	15	15
12 mA	–0.3	0.35 * VCCxxxxIOBx	0.65 * VCCxxxxIOBx	1.9	0.45	VCCxxxxIOBx – 0.45	12	12	74	91	15	15
16 mA	–0.3	0.35 * VCCxxxxIOBx	0.65 * VCCxxxxIOBx	1.9	0.45	VCCxxxxIOBx – 0.45	16	16	74	91	15	15

Notes:

1. *Currents are measured at high temperature (100°C junction temperature) and maximum voltage.*
2. *Currents are measured at 85°C junction temperature.*
3. *Software default selection highlighted in gray.*

***Table 2-48* • Minimum and Maximum DC Input and Output Levels Applicable to MSS I/O Banks**

1.8 V LVCMOS	VIL		VIH		VOL	VOH	I_{OL}	I_{OH}	I_{OSL}	I_{OSH}	I_{IL}	I_{IH}
Drive Strength	Min. V	Max. V	Min. V	Max. V	Max. V	Min. V	mA	mA	Max. mA[1]	Max. mA[1]	µA[2]	µA[2]
4 mA	–0.3	0.35 * VCCxxxxIOBx	0.65 * VCCxxxxIOBx	3.6	0.45	VCCxxxxIOBx – 0.45	4	4	22	17	15	15

Notes:

1. *Currents are measured at high temperature (100°C junction temperature) and maximum voltage.*
2. *Currents are measured at 85°C junction temperature.*
3. *Software default selection highlighted in gray.*

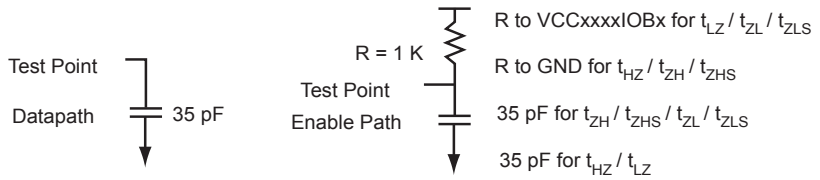

***Figure 2-8* • AC Loading**

***Table 2-49* • AC Waveforms, Measuring Points, and Capacitive Loads**

Input Low (V)	Input High (V)	Measuring Point* (V)	V_{REF} (typ.) (V)	C_{LOAD} (pF)
0	1.8	0.9	–	35

* *Measuring point = V_{trip}. See Table 2-22 on page 2-24 for a complete table of trip points.*

Timing Characteristics

***Table 2-50* • 1.8 V LVCMOS High Slew**
Worst Commercial-Case Conditions: T_J = 85°C, Worst-Case VCC = 1.425 V,
Worst-Case VCCxxxxIOBx = 1.7 V
Applicable to FPGA I/O Banks, I/O Assigned to EMC I/O Pins

Drive Strength	Speed Grade	t_{DOUT}	t_{DP}	t_{DIN}	t_{PY}	t_{EOUT}	t_{ZL}	t_{ZH}	t_{LZ}	t_{HZ}	t_{ZLS}	t_{ZHS}	Units
2 mA	Std.	0.60	11.06	0.04	1.14	0.39	8.61	11.06	2.61	1.59	10.67	13.12	ns
	–1	0.50	9.22	0.03	0.95	0.32	7.17	9.22	2.18	1.33	8.89	10.93	ns
4 mA	Std.	0.60	6.46	0.04	1.14	0.39	5.53	6.46	3.04	2.66	7.59	8.51	ns
	–1	0.50	5.38	0.03	0.95	0.32	4.61	5.38	2.54	2.22	6.33	7.10	ns
6 mA	Std.	0.60	4.16	0.04	1.14	0.39	3.99	4.16	3.34	3.18	6.05	6.22	ns
	–1	0.50	3.47	0.03	0.95	0.32	3.32	3.47	2.78	2.65	5.04	5.18	ns
8 mA	Std.	0.60	3.69	0.04	1.14	0.39	3.76	3.67	3.40	3.31	5.81	5.73	ns
	–1	0.50	3.07	0.03	0.95	0.32	3.13	3.06	2.84	2.76	4.85	4.78	ns
12 mA	Std.	0.60	3.38	0.04	1.14	0.39	3.44	2.86	3.50	3.82	5.50	4.91	ns
	–1	0.50	2.81	0.03	0.95	0.32	2.87	2.38	2.92	3.18	4.58	4.10	ns
16 mA	Std.	0.60	3.38	0.04	1.14	0.39	3.44	2.86	3.50	3.82	5.50	4.91	ns
	–1	0.50	2.81	0.03	0.95	0.32	2.87	2.38	2.92	3.18	4.58	4.10	ns

Notes:

1. *Software default selection highlighted in gray.*
2. *For specific junction temperature and voltage supply levels, refer to Table 2-7 on page 2-9 for derating values.*

***Table 2-51* • 1.8 V LVCMOS Low Slew**
Worst Commercial-Case Conditions: T_J = 85°C, Worst-Case VCC = 1.425 V,
Worst-Case VCCxxxxIOBx = 1.7 V
Applicable to FPGA I/O Banks, I/O Assigned to EMC I/O Pins

Drive Strength	Speed Grade	t_{DOUT}	t_{DP}	t_{DIN}	t_{PY}	t_{EOUT}	t_{ZL}	t_{ZH}	t_{LZ}	t_{HZ}	t_{ZLS}	t_{ZHS}	Units
2 mA	Std.	0.60	14.24	0.04	1.14	0.39	13.47	14.24	2.62	1.54	15.53	16.30	ns
	–1	0.50	11.87	0.03	0.95	0.32	11.23	11.87	2.18	1.28	12.94	13.59	ns
4 mA	Std.	0.60	9.74	0.04	1.14	0.39	9.92	9.62	3.05	2.57	11.98	11.68	ns
	–1	0.50	8.11	0.03	0.95	0.32	8.26	8.02	2.54	2.14	9.98	9.74	ns
6 mA	Std.	0.60	7.67	0.04	1.14	0.39	7.81	7.24	3.34	3.08	9.87	9.30	ns
	–1	0.50	6.39	0.03	0.95	0.32	6.51	6.03	2.79	2.56	8.23	7.75	ns
8 mA	Std.	0.60	7.15	0.04	1.14	0.39	7.29	6.75	3.41	3.21	9.34	8.80	ns
	–1	0.50	5.96	0.03	0.95	0.32	6.07	5.62	2.84	2.68	7.79	7.34	ns
12 mA	Std.	0.60	6.76	0.04	1.14	0.39	6.89	6.75	3.50	3.70	8.95	8.81	ns
	–1	0.50	5.64	0.03	0.95	0.32	5.74	5.62	2.92	3.08	7.46	7.34	ns
16 mA	Std.	0.60	6.76	0.04	1.14	0.39	6.89	6.75	3.50	3.70	8.95	8.81	ns
	–1	0.50	5.64	0.03	0.95	0.32	5.74	5.62	2.92	3.08	7.46	7.34	ns

Note: For specific junction temperature and voltage supply levels, refer to Table 2-7 on page 2-9 for derating values.

Table 2-52 **• 1.8 V LVCMOS High Slew**
Worst Commercial-Case Conditions: T_J = 85°C, Worst-Case VCC = 1.425 V,
Worst-Case VCCxxxxIOBx = 1.7 V
Applicable to MSS I/O Banks

Drive Strength	Speed Grade	t_{DOUT}	t_{DP}	t_{DIN}	t_{PY}	t_{PYS}	t_{EOUT}	t_{ZL}	t_{ZH}	t_{LZ}	t_{HZ}	Units
4 mA	Std.	0.22	2.77	0.09	1.09	1.64	0.22	2.82	2.72	2.21	2.25	ns
	–1	0.18	2.31	0.07	0.91	1.37	0.18	2.35	2.27	1.84	1.87	ns

Notes:

1. *Software default selection highlighted in gray.*
2. *For specific junction temperature and voltage supply levels, refer to Table 2-7 on page 2-9 for derating values.*

1.5 V LVCMOS (JESD8-11)

Low-Voltage CMOS for 1.5 V is an extension of the LVCMOS standard (JESD8-5) used for general-purpose 1.5 V applications. It uses a 1.5 V input buffer and a push-pull output buffer.

***Table 2-53* • Minimum and Maximum DC Input and Output Levels Applicable to FPGA I/O Banks**

1.5 V LVCMOS	VIL		VIH		VOL	VOH	I_{OL}	I_{OH}	I_{OSL}	I_{OSH}	I_{IL}	I_{IH}
Drive Strength	Min. V	Max. V	Min. V	Max. V	Max. V	Min. V	mA	mA	Max. mA[1]	Max. mA[1]	µA[2]	µA[2]
2 mA	–0.3	0.35 * VCCxxxxIOBx	0.65 * VCCxxxxIOBx	1.575	0.25* VCCxxxxIOBx	0.75 * VCCxxxxIOBx	2	2	16	13	15	15
4 mA	–0.3	0.35* VCCxxxxIOBx	0.65 * VCCxxxxIOBx	1.575	0.25* VCCxxxxIOBx	0.75 * VCCxxxxIOBx	4	4	33	25	15	15
6 mA	–0.3	0.35 * VCCxxxxIOBx	0.65 * VCCxxxxIOBx	1.575	0.25* VCCxxxxIOBx	0.75 * VCCxxxxIOBx	6	6	39	32	15	15
8 mA	–0.3	0.35 * VCCxxxxIOBx	0.65 * VCCxxxxIOBx	1.575	0.25* VCC	0.75 * VCCxxxxIOBx	8	8	55	66	15	15
12 mA	–0.3	0.35 * VCCxxxxIOBx	0.65 * VCCxxxxIOBx	1.575	0.25 * VCCxxxxIOBx	0.75 * VCCxxxxIOBx	12	12	55	66	15	15

Notes:

1. *Currents are measured at high temperature (100°C junction temperature) and maximum voltage.*
2. *Currents are measured at 85°C junction temperature.*
3. *Software default selection highlighted in gray.*

***Table 2-54* • Minimum and Maximum DC Input and Output Levels Applicable to MSS I/O Banks**

1.5 V LVCMOS	VIL		VIH		VOL	VOH	I_{OL}	I_{OH}	I_{OSL}	I_{OSH}	I_{IL}	I_{IH}
Drive Strength	Min. V	Max. V	Min. V	Max. V	Max. V	Min. V	mA	mA	Max. mA[1]	Max. mA[1]	µA[2]	µA[2]
2 mA	–0.3	0.35 * VCCxxxxIOBx	0.65 * VCCxxxxIOBx	1.575	0.25 * VCCxxxxIOBx	0.75 * VCCxxxxIOBx	2	2	16	13	15	15

Notes:

1. *Currents are measured at high temperature (100°C junction temperature) and maximum voltage.*
2. *Currents are measured at 85°C junction temperature.*
3. *Software default selection highlighted in gray.*

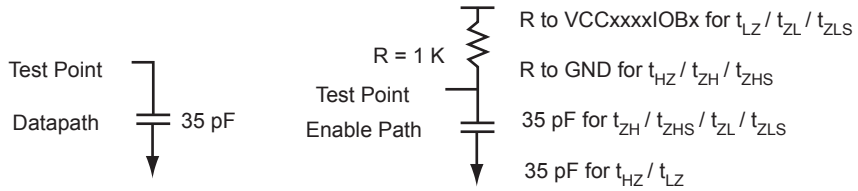

***Figure 2-9* • AC Loading**

***Table 2-55* • AC Waveforms, Measuring Points, and Capacitive Loads**

Input Low (V)	Input High (V)	Measuring Point* (V)	V_{REF} (typ.) (V)	C_{LOAD} (pF)
0	1.5	0.75	–	35

* *Measuring point = V_{trip}. See Table 2-22 on page 2-24 for a complete table of trip points.*

Timing Characteristics

***Table 2-56* • 1.5 V LVCMOS High Slew**
Worst Commercial-Case Conditions: T_J = 85°C, Worst-Case VCC = 1.425 V,
Worst-Case VCCxxxxIOBx = 1.425 V
Applicable to FPGA I/O Banks, I/O Assigned to EMC I/O Pins

Drive Strength	Speed Grade	t_{DOUT}	t_{DP}	t_{DIN}	t_{PY}	t_{EOUT}	t_{ZL}	t_{ZH}	t_{LZ}	t_{HZ}	t_{ZLS}	t_{ZHS}	Units
2 m	Std.	0.60	7.79	0.04	1.34	0.39	6.43	7.79	3.19	2.59	8.49	9.85	ns
	–1	0.50	6.49	0.03	1.12	0.32	5.36	6.49	2.66	2.16	7.08	8.21	ns
4 mA	Std.	0.60	4.95	0.04	1.34	0.39	4.61	4.96	3.53	3.19	6.67	7.02	ns
	–1	0.50	4.13	0.03	1.12	0.32	3.85	4.13	2.94	2.66	5.56	5.85	ns
6 mA	Std.	0.60	4.36	0.04	1.34	0.39	4.34	4.36	3.60	3.34	6.40	6.42	ns
	–1	0.50	3.64	0.03	1.12	0.32	3.62	3.64	3.00	2.78	5.33	5.35	ns
8 mA	Std.	0.60	3.89	0.04	1.34	0.39	3.96	3.34	3.72	3.92	6.02	5.40	ns
	–1	0.50	3.24	0.03	1.12	0.32	3.30	2.79	3.10	3.27	5.02	4.50	ns
12 mA	Std.	0.60	3.89	0.04	1.34	0.39	3.96	3.34	3.72	3.92	6.02	5.40	ns
	–1	0.50	3.24	0.03	1.12	0.32	3.30	2.79	3.10	3.27	5.02	4.50	ns

Notes:

1. *Software default selection highlighted in gray.*
2. *For specific junction temperature and voltage supply levels, refer to Table 2-7 on page 2-9 for derating values.*

***Table 2-57* • 1.5 V LVCMOS Low Slew**
Worst Commercial-Case Conditions: T_J = 85°C, Worst-Case VCC = 1.425 V,
Worst-Case VCCxxxxIOBx = 1.4 V
Applicable to FPGA I/O Banks, I/O Assigned to EMC I/O Pins

Drive Strength	Speed Grade	t_{DOUT}	t_{DP}	t_{DIN}	t_{PY}	t_{EOUT}	t_{ZL}	t_{ZH}	t_{LZ}	t_{HZ}	t_{ZLS}	t_{ZHS}	Units
2 mA	Std.	0.60	11.96	0.04	1.34	0.39	12.18	11.70	3.20	2.47	14.24	13.76	ns
	–1	0.50	9.96	0.03	1.12	0.32	10.15	9.75	2.67	2.06	11.86	11.46	ns
4 mA	Std.	0.60	9.51	0.04	1.34	0.39	9.68	8.76	3.54	3.07	11.74	10.82	ns
	–1	0.50	7.92	0.03	1.12	0.32	8.07	7.30	2.95	2.56	9.79	9.02	ns
6 mA	Std.	0.60	8.86	0.04	1.34	0.39	9.03	8.17	3.61	3.22	11.08	10.23	ns
	–1	0.50	7.39	0.03	1.12	0.32	7.52	6.81	3.01	2.68	9.24	8.52	ns
8 mA	Std.	0.60	8.44	0.04	1.34	0.39	8.60	8.18	3.73	3.78	10.66	10.24	ns
	–1	0.50	7.04	0.03	1.12	0.32	7.17	6.82	3.11	3.15	8.88	8.53	ns
12 mA	Std.	0.60	8.44	0.04	1.34	0.39	8.60	8.18	3.73	3.78	10.66	10.24	ns
	–1	0.50	7.04	0.03	1.12	0.32	7.17	6.82	3.11	3.15	8.88	8.53	ns

Note: For specific junction temperature and voltage supply levels, refer to Table 2-7 on page 2-9 for derating values.

***Table 2-58* • 1.5 V LVCMOS High Slew**
Worst Commercial-Case Conditions: T_J = 85°C, Worst-Case VCC = 1.425 V,
Worst-Case VCCxxxxIOBx = 3.0 V
Applicable to MSS I/O Banks

Drive Strength	Speed Grade	t_{DOUT}	t_{DP}	t_{DIN}	t_{PY}	t_{PYS}	t_{EOUT}	t_{ZL}	t_{ZH}	t_{LZ}	t_{HZ}	Units
2 mA	Std.	0.22	3.24	0.09	1.28	1.86	0.22	3.30	3.20	2.24	2.21	ns
	–1	0.18	2.70	0.07	1.07	1.55	0.18	2.75	2.67	1.87	1.85	ns

Notes:

1. *Software default selection highlighted in gray.*
2. *For specific junction temperature and voltage supply levels, refer to Table 2-7 on page 2-9 for derating values.*

3.3 V PCI, 3.3 V PCI-X

Peripheral Component Interface for 3.3 V standard specifies support for 33 MHz and 66 MHz PCI Bus applications.

***Table 2-59* • Minimum and Maximum DC Input and Output Levels**

3.3 V PCI/PCI-X	VIL		VIH		VOL	VOH	I_{OL}	I_{OH}	I_{OSL}	I_{OSH}	I_{IL}	I_{IH}
Drive Strength	Min. V	Max. V	Min. V	Max. V	Max. V	Min. V	mA	mA	Max. mA[1]	Max. mA[1]	µA[2]	µA[2]
Per PCI specification	Per PCI curves										15	15

Notes:

1. *Currents are measured at high temperature (100°C junction temperature) and maximum voltage.*
2. *Currents are measured at 85°C junction temperature.*

AC loadings are defined per the PCI/PCI-X specifications for the datapath; SoC Products Group loadings for enable path characterization are described in Figure 2-10.

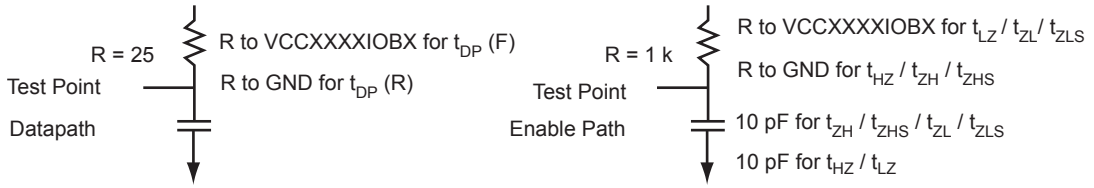

***Figure 2-10* • AC Loading**

AC loadings are defined per PCI/PCI-X specifications for the datapath; SoC Products Group loading for tristate is described in Table 2-60.

***Table 2-60* • AC Waveforms, Measuring Points, and Capacitive Loads**

Input Low (V)	Input High (V)	Measuring Point* (V)	V_{REF} (typ.) (V)	C_{LOAD} (pF)
0	3.3	0.285 * VCCxxxxIOBx for $t_{DP(R)}$ 0.615 * VCCxxxxIOBx for $t_{DP(F)}$	–	10

* *Measuring point = V_{trip}. See Table 2-22 on page 2-24 for a complete table of trip points.*

Timing Characteristics

***Table 2-61* • 3.3 V PCI**

Worst Commercial-Case Conditions: T_J = 85°C, Worst-Case VCC = 1.425 V,
Worst-Case VCCxxxxIOBx = 3.0 V
Applicable to FPGA I/O Banks, I/O Assigned to EMC I/O Pins

Speed Grade	t_{DOUT}	t_{DP}	t_{DIN}	t_{PY}	t_{EOUT}	t_{ZL}	t_{ZH}	t_{LZ}	t_{HZ}	t_{ZLS}	t_{ZHS}	Units
Std.	0.60	2.54	0.04	0.82	0.39	2.58	1.88	3.06	3.39	4.64	3.94	ns
–1	0.50	2.11	0.03	0.68	0.32	2.15	1.57	2.55	2.82	3.87	3.28	ns

Note: For specific junction temperature and voltage supply levels, refer to Table 2-7 on page 2-9 for derating values.

***Table 2-62* • 3.3 V PCI-X**

Worst Commercial-Case Conditions: T_J = 85°C, Worst-Case VCC = 1.425 V,
Worst-Case VCCxxxxIOBx = 3.0 V
Applicable to FPGA I/O Banks, I/O Assigned to EMC I/O Pins

Speed Grade	t_{DOUT}	t_{DP}	t_{DIN}	t_{PY}	t_{EOUT}	t_{ZL}	t_{ZH}	t_{LZ}	t_{HZ}	t_{ZLS}	t_{ZHS}	Units
Std.	0.60	2.54	0.04	0.77	0.39	2.58	1.88	3.06	3.39	4.64	3.94	ns
–1	0.50	2.11	0.03	0.64	0.32	2.15	1.57	2.55	2.82	3.87	3.28	ns

Note: For specific junction temperature and voltage supply levels, refer to Table 2-7 on page 2-9 for derating values.

Differential I/O Characteristics

Physical Implementation

Configuration of the I/O modules as a differential pair is handled by SoC Products Group Designer software when the user instantiates a differential I/O macro in the design.

Differential I/Os can also be used in conjunction with the embedded Input Register (InReg), Output Register (OutReg), Enable Register (EnReg), and Double Data Rate (DDR). However, there is no support for bidirectional I/Os or tristates with the LVPECL standards.

LVDS

Low-Voltage Differential Signaling (ANSI/TIA/EIA-644) is a high-speed, differential I/O standard. It requires that one data bit be carried through two signal lines, so two pins are needed. It also requires external resistor termination.

The full implementation of the LVDS transmitter and receiver is shown in an example in Figure 2-11. The building blocks of the LVDS transmitter-receiver are one transmitter macro, one receiver macro, three board resistors at the transmitter end, and one resistor at the receiver end. The values for the three driver resistors are different from those used in the LVPECL implementation because the output standard specifications are different.

Along with LVDS I/O, SmartFusion cSoCs also support bus LVDS structure and multipoint LVDS (M-LVDS) configuration (up to 40 nodes).

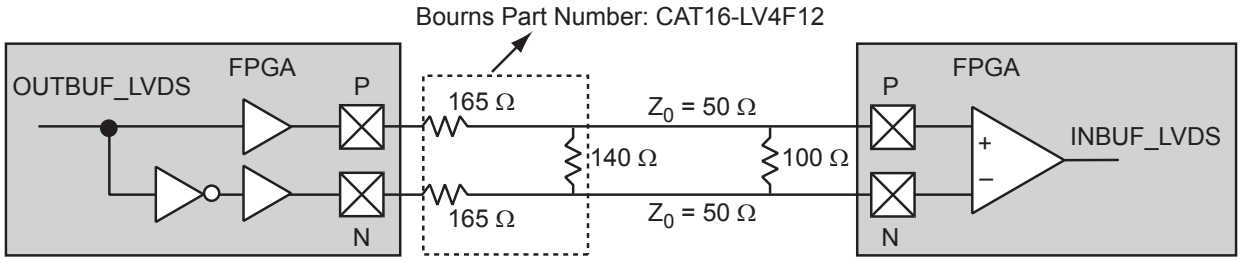

Figure 2-11 **• LVDS Circuit Diagram and Board-Level Implementation**

***Table 2-63* • LVDS Minimum and Maximum DC Input and Output Levels**

DC Parameter	Description	Min.	Typ.	Max.	Units
VCCFPGAIOBx	Supply voltage	2.375	2.5	2.625	V
VOL	Output low voltage	0.9	1.075	1.25	V
VOH	Output high voltage	1.25	1.425	1.6	V
I_{OL}[1]	Output lower current	0.65	0.91	1.16	mA
I_{OH}[1]	Output high current	0.65	0.91	1.16	mA
VI	Input voltage	0		2.925	V
I_{IH}[2]	Input high leakage current			15	µA
I_{IL}[2]	Input low leakage current			15	µA
V_{ODIFF}	Differential output voltage	250	350	450	mV
V_{OCM}	Output common mode voltage	1.125	1.25	1.375	V
V_{ICM}	Input common mode voltage	0.05	1.25	2.35	V
V_{IDIFF}	Input differential voltage	100	350		mV

Notes:

1. *I_{OL}/I_{OH} defined by V_{ODIFF}/(resistor network).*
2. *Currents are measured at 85°C junction temperature.*

***Table 2-64* • AC Waveforms, Measuring Points, and Capacitive Loads**

Input Low (V)	Input High (V)	Measuring Point* (V)	V_{REF} (typ.) (V)
1.075	1.325	Cross point	–

* *Measuring point = V_{trip}. See Table 2-22 on page 2-24 for a complete table of trip points.*

Timing Characteristics

***Table 2-65* • LVDS**
Worst Commercial-Case Conditions: T_J = 85°C, Worst-Case VCC = 1.425 V,
Worst-Case VCCFPGAIOBx = 2.3 V
Applicable to FPGA I/O Banks, I/O Assigned to EMC I/O Pins

Speed Grade	t_{DOUT}	t_{DP}	t_{DIN}	t_{PY}	Units
Std.	0.60	1.83	0.04	1.87	ns
–1	0.50	1.53	0.03	1.55	ns

Notes:

1. *For the derating values at specific junction temperature and voltage supply levels, refer to Table 2-7 on page 2-9 for derating values.*
2. *The above mentioned timing parameters correspond to 24mA drive strength.*

B-LVDS/M-LVDS

Bus LVDS (B-LVDS) and Multipoint LVDS (M-LVDS) specifications extend the existing LVDS standard to high-performance multipoint bus applications. Multidrop and multipoint bus configurations may contain any combination of drivers, receivers, and transceivers. SoC Products Group LVDS drivers provide the higher drive current required by B-LVDS and M-LVDS to accommodate the loading. The drivers require series terminations for better signal quality and to control voltage swing. Termination is also required at both ends of the bus since the driver can be located anywhere on the bus. These configurations can be implemented using the TRIBUF_LVDS and BIBUF_LVDS macros along with appropriate terminations. Multipoint designs using SoC Products Group LVDS macros can achieve up to 200 MHz with a maximum of 20 loads. A sample application is given in Figure 2-12. The input and output buffer delays are available in the LVDS section in Table 2-65.

Example: For a bus consisting of 20 equidistant loads, the following terminations provide the required differential voltage, in worst-case commercial operating conditions, at the farthest receiver: R_S = 60 Ω and R_T = 70 Ω, given Z_0 = 50 Ω (2") and Z_{stub} = 50 Ω (~1.5").

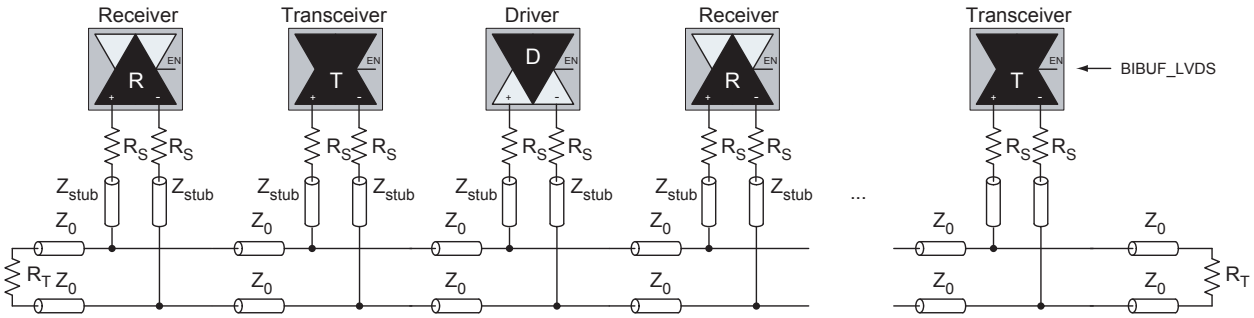

Figure 2-12 • **B-LVDS/M-LVDS Multipoint Application Using LVDS I/O Buffers**

LVPECL

Low-Voltage Positive Emitter-Coupled Logic (LVPECL) is another differential I/O standard. It requires that one data bit be carried through two signal lines. Like LVDS, two pins are needed. It also requires external resistor termination.

The full implementation of the LVDS transmitter and receiver is shown in an example in Figure 2-13. The building blocks of the LVPECL transmitter-receiver are one transmitter macro, one receiver macro, three board resistors at the transmitter end, and one resistor at the receiver end. The values for the three driver resistors are different from those used in the LVDS implementation because the output standard specifications are different.

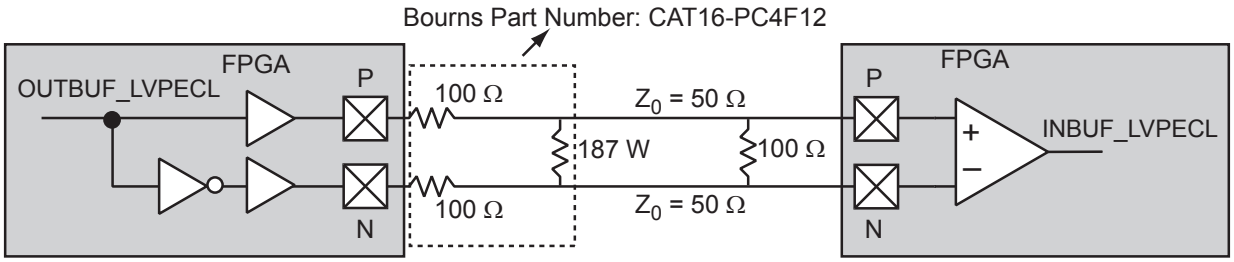

Figure 2-13 • **LVPECL Circuit Diagram and Board-Level Implementation**

***Table 2-66* • Minimum and Maximum DC Input and Output Levels**

DC Parameter	Description	Min.	Max.	Min.	Max.	Min.	Max.	Units
VCCFPGAIOBx	Supply Voltage	3.0		3.3		3.6		V
VOL	Output Low Voltage	0.96	1.27	1.06	1.43	1.30	1.57	V
VOH	Output High Voltage	1.8	2.11	1.92	2.28	2.13	2.41	V
VIL, VIH	Input Low, Input High Voltages	0	3.6	0	3.6	0	3.6	V
VODIFF	Differential Output Voltage	0.625	0.97	0.625	0.97	0.625	0.97	V
VOCM	Output Common-Mode Voltage	1.762	1.98	1.762	1.98	1.762	1.98	V
VICM	Input Common-Mode Voltage	1.01	2.57	1.01	2.57	1.01	2.57	V
VIDIFF	Input Differential Voltage	300		300		300		mV

***Table 2-67* • AC Waveforms, Measuring Points, and Capacitive Loads**

Input Low (V)	Input High (V)	Measuring Point* (V)	V_{REF} (typ.) (V)
1.64	1.94	Cross point	–

* *Measuring point = V_{trip}. See Table 2-22 on page 2-24 for a complete table of trip points.*

Timing Characteristics

***Table 2-68* • LVPECL**
Worst Commercial-Case Conditions: T_J = 85°C, Worst-Case VCC = 1.425 V,
Worst-Case VCCFPGAIOBx = 3.0 V
Applicable to FPGA I/O Banks, I/O Assigned to EMC I/O Pins

Speed Grade	t_{DOUT}	t_{DP}	t_{DIN}	t_{PY}	Units
Std.	0.60	1.76	0.04	1.76	ns
–1	0.50	1.46	0.03	1.46	ns

Notes:

1. *For the derating values at specific junction temperature and voltage supply levels, refer to Table 2-7 on page 2-9 for derating values.*
2. *The above mentioned timing parameters correspond to 24mA drive strength.*

I/O Register Specifications

Fully Registered I/O Buffers with Synchronous Enable and Asynchronous Preset

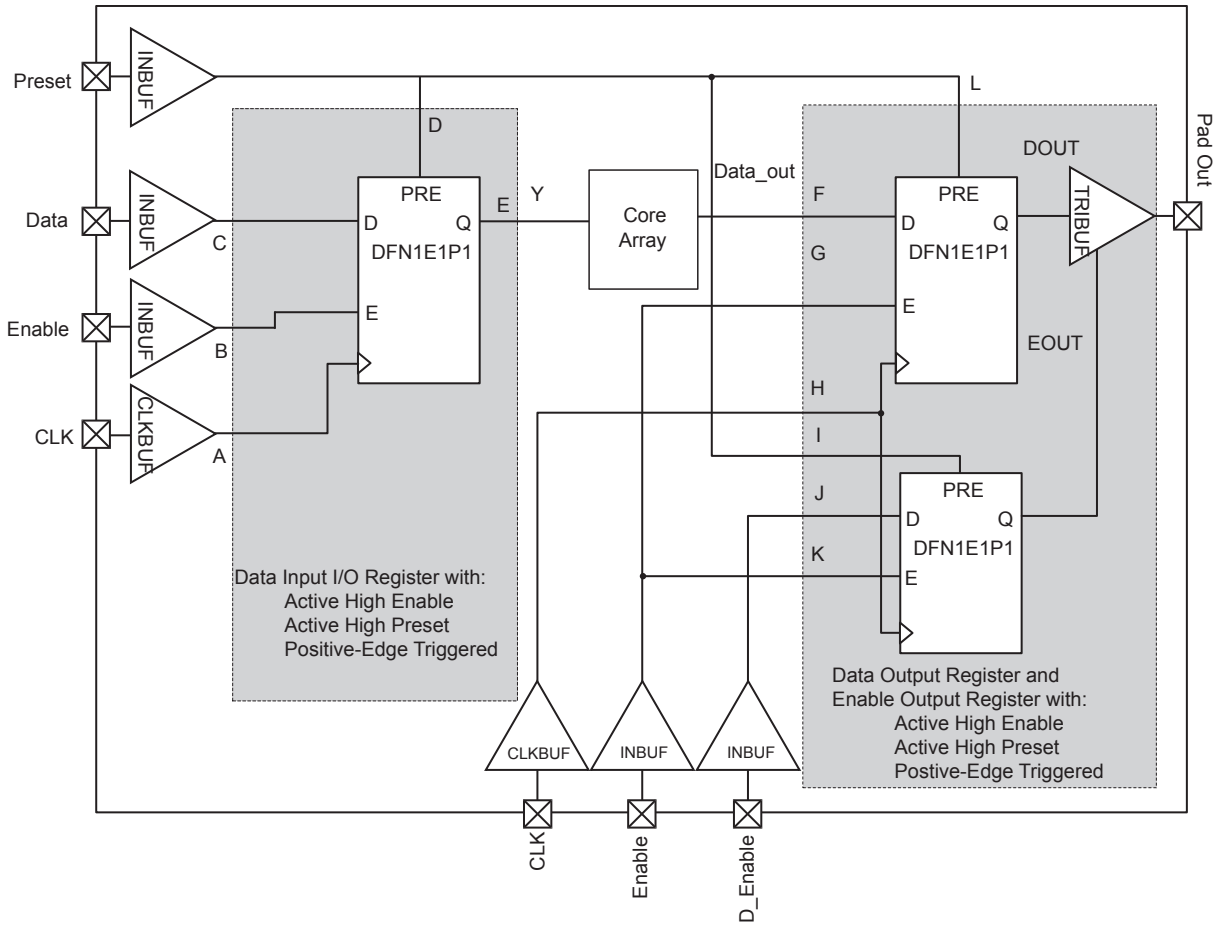

Figure 2-14 **• Timing Model of Registered I/O Buffers with Synchronous Enable and Asynchronous Preset**

***Table 2-69* • Parameter Definition and Measuring Nodes**

Parameter Name	Parameter Definition	Measuring Nodes (from, to)*
t_{OCLKQ}	Clock-to-Q of the Output Data Register	H, DOUT
t_{OSUD}	Data Setup Time for the Output Data Register	F, H
t_{OHD}	Data Hold Time for the Output Data Register	F, H
t_{OSUE}	Enable Setup Time for the Output Data Register	G, H
t_{OHE}	Enable Hold Time for the Output Data Register	G, H
t_{OPRE2Q}	Asynchronous Preset-to-Q of the Output Data Register	L, DOUT
$t_{OREMPRE}$	Asynchronous Preset Removal Time for the Output Data Register	L, H
$t_{ORECPRE}$	Asynchronous Preset Recovery Time for the Output Data Register	L, H
t_{OECLKQ}	Clock-to-Q of the Output Enable Register	H, EOUT
t_{OESUD}	Data Setup Time for the Output Enable Register	J, H
t_{OEHD}	Data Hold Time for the Output Enable Register	J, H
t_{OESUE}	Enable Setup Time for the Output Enable Register	K, H
t_{OEHE}	Enable Hold Time for the Output Enable Register	K, H
$t_{OEPRE2Q}$	Asynchronous Preset-to-Q of the Output Enable Register	I, EOUT
$t_{OEREMPRE}$	Asynchronous Preset Removal Time for the Output Enable Register	I, H
$t_{OERECPRE}$	Asynchronous Preset Recovery Time for the Output Enable Register	I, H
t_{ICLKQ}	Clock-to-Q of the Input Data Register	A, E
t_{ISUD}	Data Setup Time for the Input Data Register	C, A
t_{IHD}	Data Hold Time for the Input Data Register	C, A
t_{ISUE}	Enable Setup Time for the Input Data Register	B, A
t_{IHE}	Enable Hold Time for the Input Data Register	B, A
t_{IPRE2Q}	Asynchronous Preset-to-Q of the Input Data Register	D, E
$t_{IREMPRE}$	Asynchronous Preset Removal Time for the Input Data Register	D, A
$t_{IRECPRE}$	Asynchronous Preset Recovery Time for the Input Data Register	D, A

* *See Figure 2-14 on page 2-44 for more information.*

Fully Registered I/O Buffers with Synchronous Enable and Asynchronous Clear

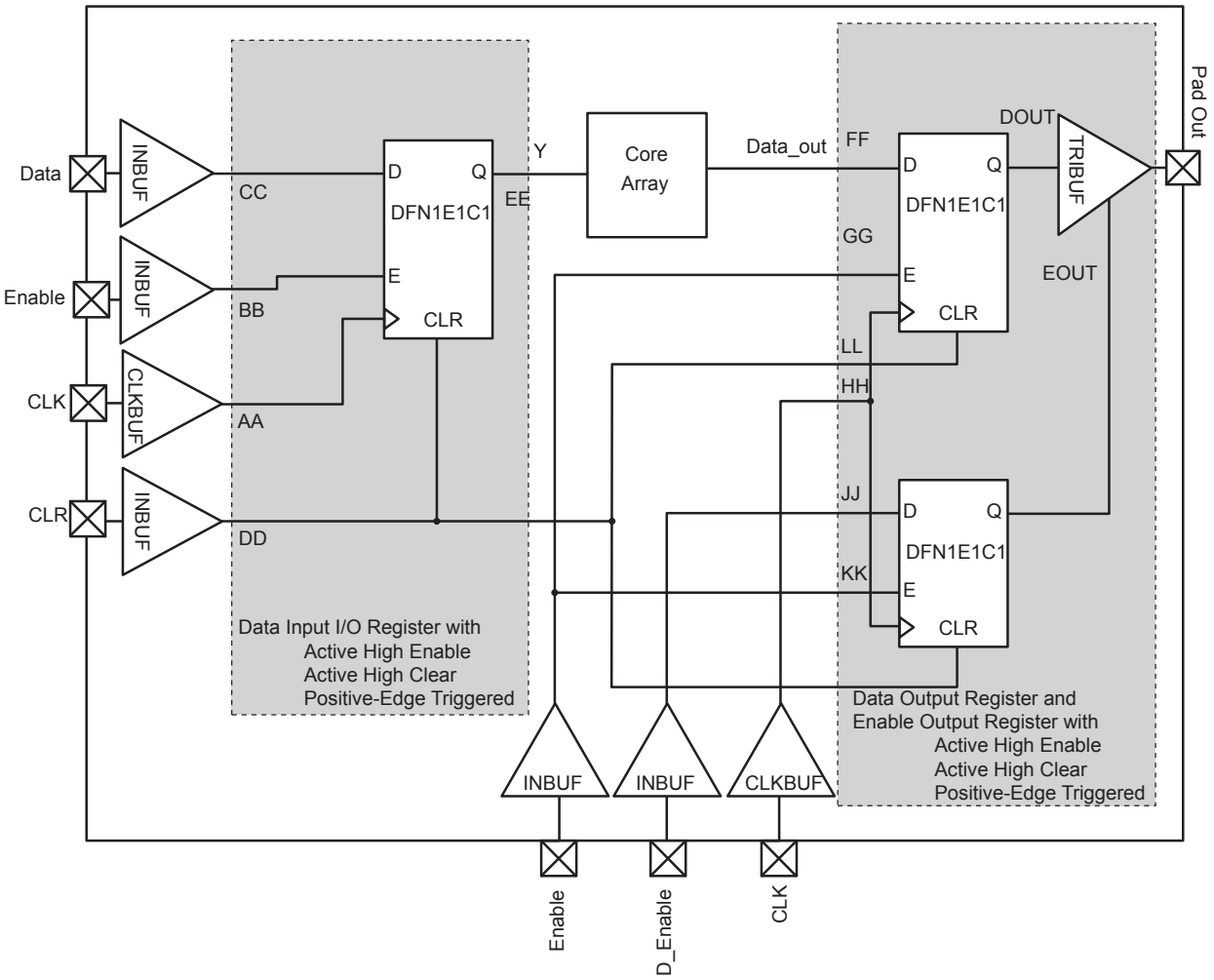

Figure 2-15 • **Timing Model of the Registered I/O Buffers with Synchronous Enable and Asynchronous Clear**

***Table 2-70* • Parameter Definition and Measuring Nodes**

Parameter Name	Parameter Definition	Measuring Nodes (from, to)*
t_{OCLKQ}	Clock-to-Q of the Output Data Register	HH, DOUT
t_{OSUD}	Data Setup Time for the Output Data Register	FF, HH
t_{OHD}	Data Hold Time for the Output Data Register	FF, HH
t_{OSUE}	Enable Setup Time for the Output Data Register	GG, HH
t_{OHE}	Enable Hold Time for the Output Data Register	GG, HH
t_{OCLR2Q}	Asynchronous Clear-to-Q of the Output Data Register	LL, DOUT
$t_{OREMCLR}$	Asynchronous Clear Removal Time for the Output Data Register	LL, HH
$t_{ORECCLR}$	Asynchronous Clear Recovery Time for the Output Data Register	LL, HH
t_{OECLKQ}	Clock-to-Q of the Output Enable Register	HH, EOUT
t_{OESUD}	Data Setup Time for the Output Enable Register	JJ, HH
t_{OEHD}	Data Hold Time for the Output Enable Register	JJ, HH
t_{OESUE}	Enable Setup Time for the Output Enable Register	KK, HH
t_{OEHE}	Enable Hold Time for the Output Enable Register	KK, HH
$t_{OECLR2Q}$	Asynchronous Clear-to-Q of the Output Enable Register	II, EOUT
$t_{OEREMCLR}$	Asynchronous Clear Removal Time for the Output Enable Register	II, HH
$t_{OERECCLR}$	Asynchronous Clear Recovery Time for the Output Enable Register	II, HH
t_{ICLKQ}	Clock-to-Q of the Input Data Register	AA, EE
t_{ISUD}	Data Setup Time for the Input Data Register	CC, AA
t_{IHD}	Data Hold Time for the Input Data Register	CC, AA
t_{ISUE}	Enable Setup Time for the Input Data Register	BB, AA
t_{IHE}	Enable Hold Time for the Input Data Register	BB, AA
t_{ICLR2Q}	Asynchronous Clear-to-Q of the Input Data Register	DD, EE
$t_{IREMCLR}$	Asynchronous Clear Removal Time for the Input Data Register	DD, AA
$t_{IRECCLR}$	Asynchronous Clear Recovery Time for the Input Data Register	DD, AA

* *See Figure 2-15 on page 2-46 for more information.*

Input Register

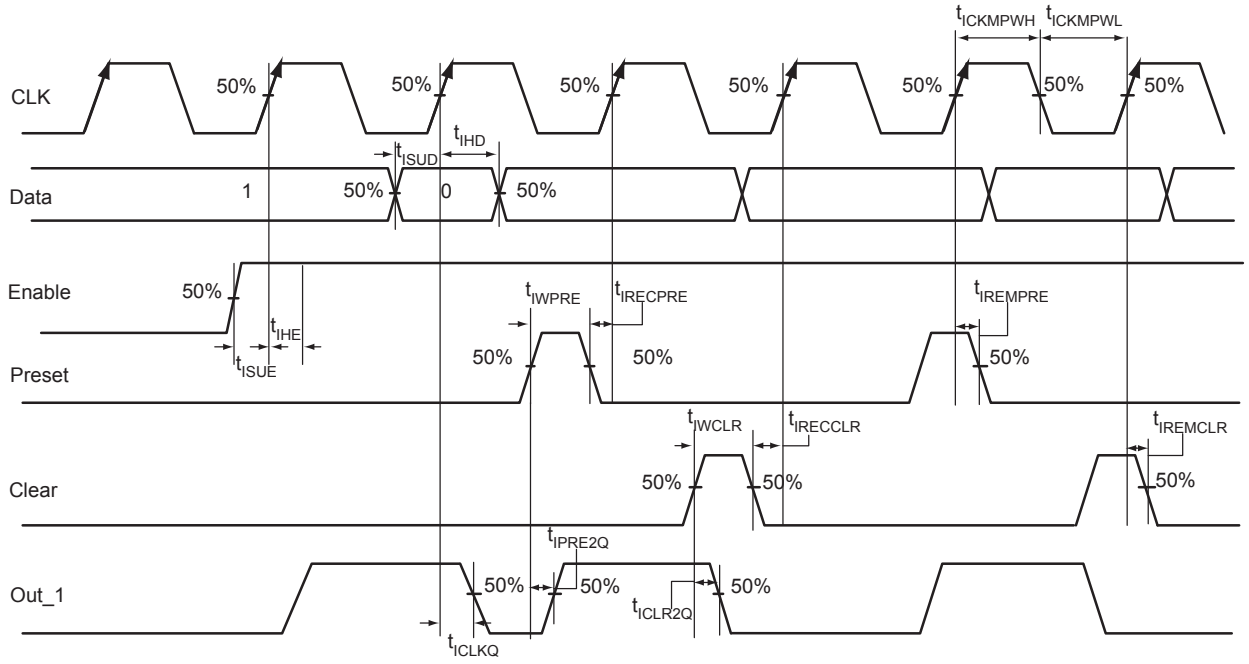

Figure 2-16 **• Input Register Timing Diagram**

Timing Characteristics

Table 2-71 **• Input Data Register Propagation Delays**
Worst Commercial-Case Conditions: T_J = 85°C, Worst-Case VCC = 1.425 V

Parameter	Description	–1	Std.	Units
t_{ICLKQ}	Clock-to-Q of the Input Data Register	0.24	0.29	ns
t_{ISUD}	Data Setup Time for the Input Data Register	0.27	0.32	ns
t_{IHD}	Data Hold Time for the Input Data Register	0.00	0.00	ns
t_{ISUE}	Enable Setup Time for the Input Data Register	0.38	0.45	ns
t_{IHE}	Enable Hold Time for the Input Data Register	0.00	0.00	ns
t_{ICLR2Q}	Asynchronous Clear-to-Q of the Input Data Register	0.46	0.55	ns
t_{IPRE2Q}	Asynchronous Preset-to-Q of the Input Data Register	0.46	0.55	ns
$t_{IREMCLR}$	Asynchronous Clear Removal Time for the Input Data Register	0.00	0.00	ns
$t_{IRECCLR}$	Asynchronous Clear Recovery Time for the Input Data Register	0.23	0.27	ns
$t_{IREMPRE}$	Asynchronous Preset Removal Time for the Input Data Register	0.00	0.00	ns
$t_{IRECPRE}$	Asynchronous Preset Recovery Time for the Input Data Register	0.23	0.27	ns
t_{IWCLR}	Asynchronous Clear Minimum Pulse Width for the Input Data Register	0.22	0.22	ns
t_{IWPRE}	Asynchronous Preset Minimum Pulse Width for the Input Data Register	0.22	0.22	ns
$t_{ICKMPWH}$	Clock Minimum Pulse Width High for the Input Data Register	0.36	0.36	ns
$t_{ICKMPWL}$	Clock Minimum Pulse Width Low for the Input Data Register	0.32	0.32	ns

Note: For the derating values at specific junction temperature and voltage supply levels, refer to Table 2-7 on page 2-9 for derating values.

Output Register

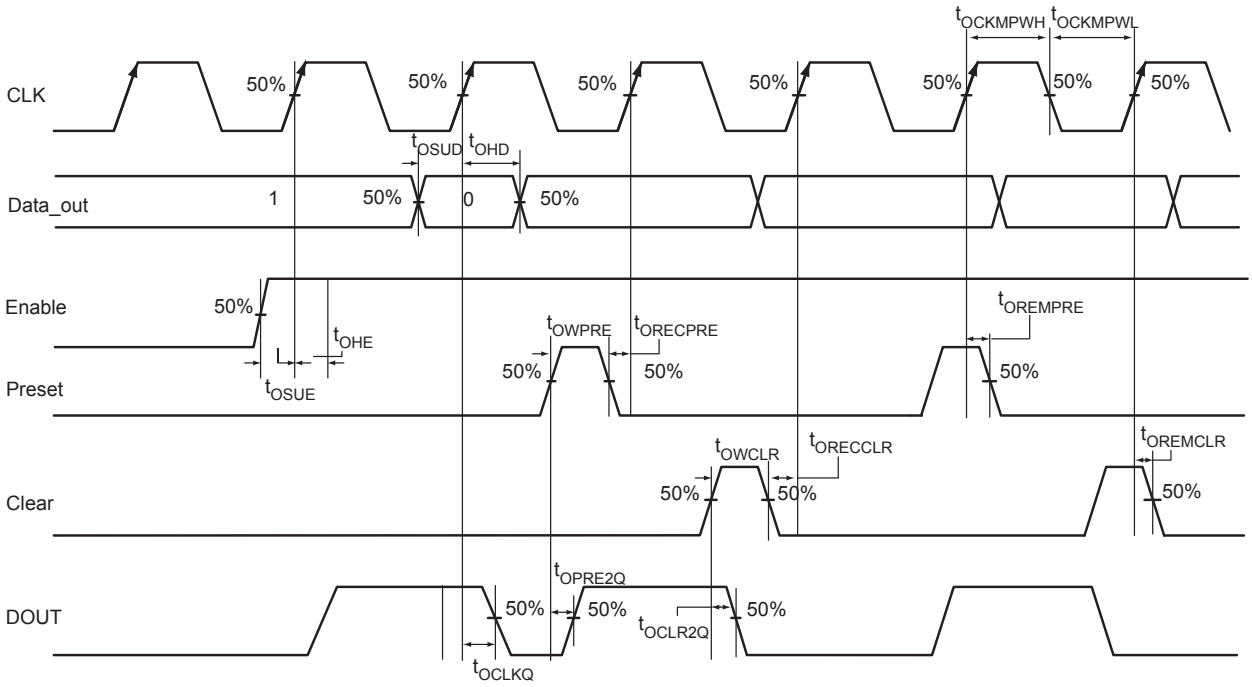

Figure 2-17 **• Output Register Timing Diagram**

Timing Characteristics

Table 2-72 **• Output Data Register Propagation Delays**
Worst Commercial-Case Conditions: T_J = 85°C, Worst-Case VCC = 1.425 V

Parameter	Description	–1	Std.	Units
t_{OCLKQ}	Clock-to-Q of the Output Data Register	0.60	0.72	ns
t_{OSUD}	Data Setup Time for the Output Data Register	0.32	0.38	ns
t_{OHD}	Data Hold Time for the Output Data Register	0.00	0.00	ns
t_{OSUE}	Enable Setup Time for the Output Data Register	0.44	0.53	ns
t_{OHE}	Enable Hold Time for the Output Data Register	0.00	0.00	ns
t_{OCLR2Q}	Asynchronous Clear-to-Q of the Output Data Register	0.82	0.98	ns
t_{OPRE2Q}	Asynchronous Preset-to-Q of the Output Data Register	0.82	0.98	ns
$t_{OREMCLR}$	Asynchronous Clear Removal Time for the Output Data Register	0.00	0.00	ns
$t_{ORECCLR}$	Asynchronous Clear Recovery Time for the Output Data Register	0.23	0.27	ns
$t_{OREMPRE}$	Asynchronous Preset Removal Time for the Output Data Register	0.00	0.00	ns
$t_{ORECPRE}$	Asynchronous Preset Recovery Time for the Output Data Register	0.23	0.27	ns
t_{OWCLR}	Asynchronous Clear Minimum Pulse Width for the Output Data Register	0.22	0.22	ns
t_{OWPRE}	Asynchronous Preset Minimum Pulse Width for the Output Data Register	0.22	0.22	ns
$t_{OCKMPWH}$	Clock Minimum Pulse Width High for the Output Data Register	0.36	0.36	ns
$t_{OCKMPWL}$	Clock Minimum Pulse Width Low for the Output Data Register	0.32	0.32	ns

Note: For the derating values at specific junction temperature and voltage supply levels, refer to Table 2-7 on page 2-9 for derating values.

Output Enable Register

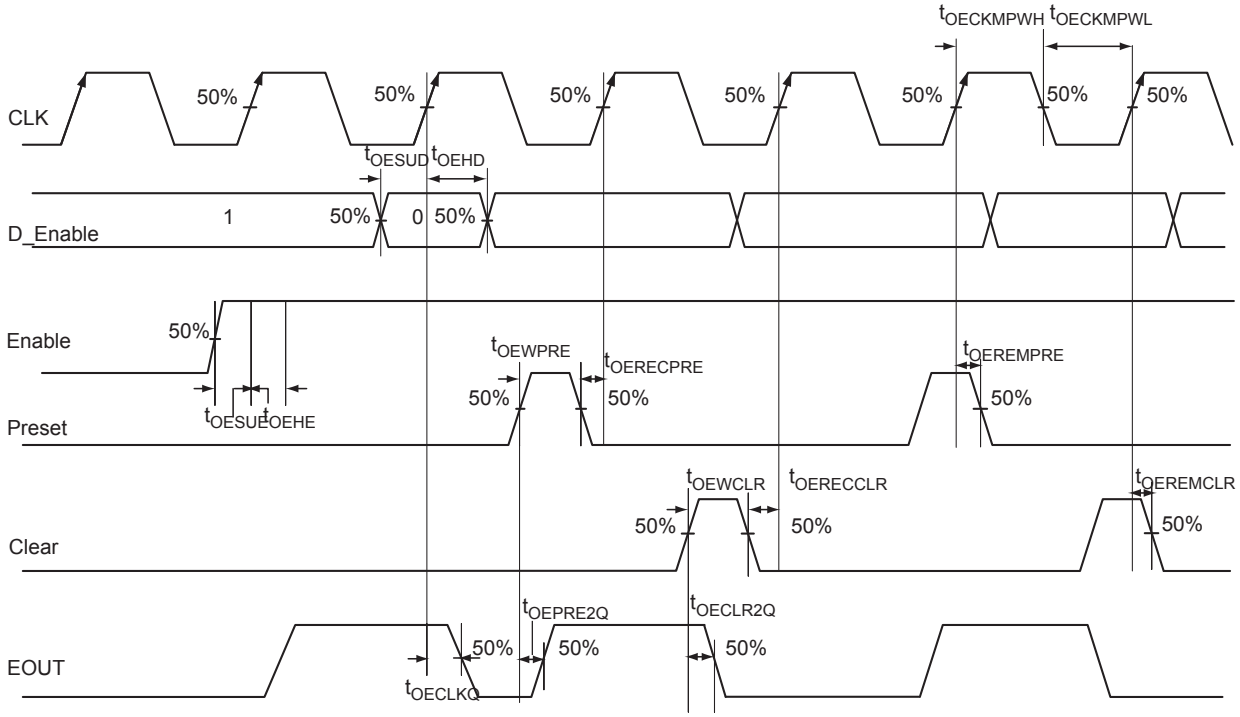

Figure 2-18 **• Output Enable Register Timing Diagram**

Timing Characteristics

Table 2-73 **• Output Enable Register Propagation Delays**
Worst Commercial-Case Conditions: T_J = 85°C, Worst-Case VCC = 1.425 V

Parameter	Description	–1	Std.	Units
t_{OECLKQ}	Clock-to-Q of the Output Enable Register	0.45	0.54	ns
t_{OESUD}	Data Setup Time for the Output Enable Register	0.32	0.38	ns
t_{OEHD}	Data Hold Time for the Output Enable Register	0.00	0.00	ns
t_{OESUE}	Enable Setup Time for the Output Enable Register	0.44	0.53	ns
t_{OEHE}	Enable Hold Time for the Output Enable Register	0.00	0.00	ns
$t_{OECLR2Q}$	Asynchronous Clear-to-Q of the Output Enable Register	0.68	0.81	ns
$t_{OEPRE2Q}$	Asynchronous Preset-to-Q of the Output Enable Register	0.68	0.81	ns
$t_{OEREMCLR}$	Asynchronous Clear Removal Time for the Output Enable Register	0.00	0.00	ns
$t_{OERECCLR}$	Asynchronous Clear Recovery Time for the Output Enable Register	0.23	0.27	ns
$t_{OEREMPRE}$	Asynchronous Preset Removal Time for the Output Enable Register	0.00	0.00	ns
$t_{OERECPRE}$	Asynchronous Preset Recovery Time for the Output Enable Register	0.23	0.27	ns
t_{OEWCLR}	Asynchronous Clear Minimum Pulse Width for the Output Enable Register	0.22	0.22	ns
t_{OEWPRE}	Asynchronous Preset Minimum Pulse Width for the Output Enable Register	0.22	0.22	ns
$t_{OECKMPWH}$	Clock Minimum Pulse Width High for the Output Enable Register	0.36	0.36	ns
$t_{OECKMPWL}$	Clock Minimum Pulse Width Low for the Output Enable Register	0.32	0.32	ns

Note: For specific junction temperature and voltage supply levels, refer to Table 2-7 on page 2-9 for derating values.

DDR Module Specifications

Input DDR Module

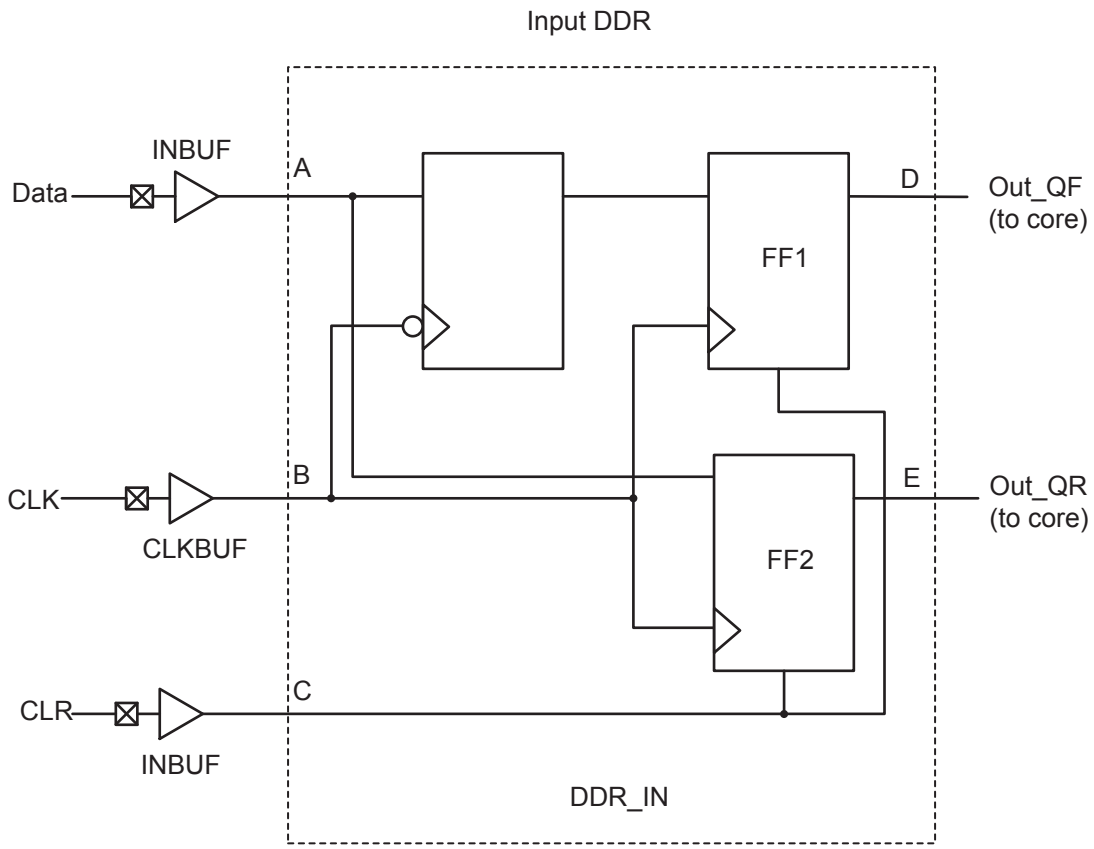

Figure 2-19 **• Input DDR Timing Model**

Table 2-74 **• Parameter Definitions**

Parameter Name	Parameter Definition	Measuring Nodes (from, to)
$t_{DDRICLKQ1}$	Clock-to-Out Out_QR	B, D
$t_{DDRICLKQ2}$	Clock-to-Out Out_QF	B, E
$t_{DDRISUD}$	Data Setup Time of DDR input	A, B
t_{DDRIHD}	Data Hold Time of DDR input	A, B
$t_{DDRICLR2Q1}$	Clear-to-Out Out_QR	C, D
$t_{DDRICLR2Q2}$	Clear-to-Out Out_QF	C, E
$t_{DDRIREMCLR}$	Clear Removal	C, B
$t_{DDRIRECCLR}$	Clear Recovery	C, B

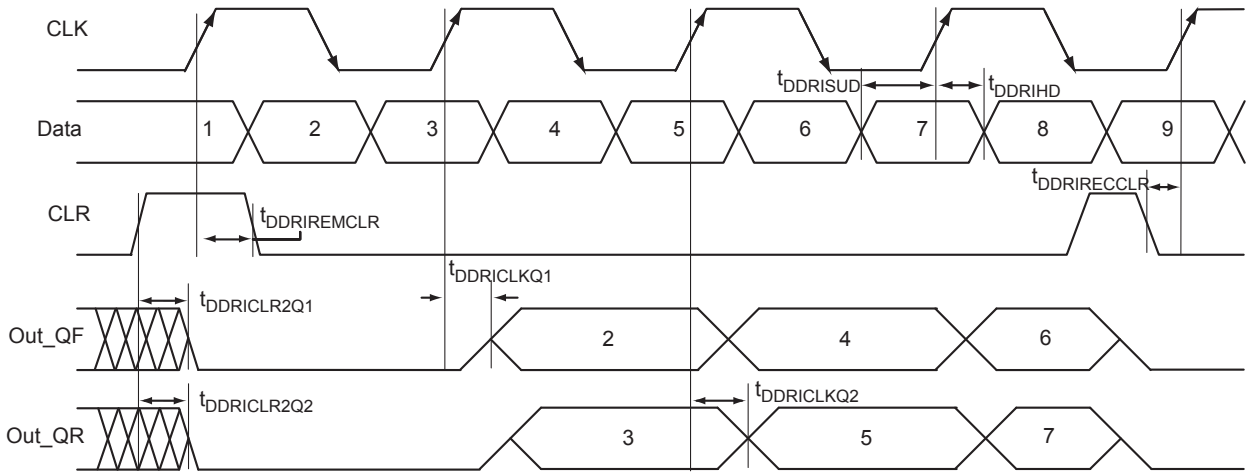

Figure 2-20 **• Input DDR Timing Diagram**

Timing Characteristics

Table 2-75 **• Input DDR Propagation Delays**
Worst Commercial-Case Conditions: T_J = 85°C, Worst Case VCC = 1.425 V

Parameter	Description	–1	Units
$t_{DDRICLKQ1}$	Clock-to-Out Out_QR for Input DDR	0.39	ns
$t_{DDRICLKQ2}$	Clock-to-Out Out_QF for Input DDR	0.28	ns
$t_{DDRISUD}$	Data Setup for Input DDR	0.29	ns
t_{DDRIHD}	Data Hold for Input DDR	0.00	ns
$t_{DDRICLR2Q1}$	Asynchronous Clear-to-Out Out_QR for Input DDR	0.58	ns
$t_{DDRICLR2Q2}$	Asynchronous Clear-to-Out Out_QF for Input DDR	0.47	ns
$t_{DDRIREMCLR}$	Asynchronous Clear Removal time for Input DDR	0.00	ns
$t_{DDRIRECCLR}$	Asynchronous Clear Recovery time for Input DDR	0.23	ns
$t_{DDRIWCLR}$	Asynchronous Clear Minimum Pulse Width for Input DDR	0.22	ns
$t_{DDRICKMPWH}$	Clock Minimum Pulse Width High for Input DDR	0.36	ns
$t_{DDRICKMPWL}$	Clock Minimum Pulse Width Low for Input DDR	0.32	ns
$F_{DDRIMAX}$	Maximum Frequency for Input DDR	350	MHz

Note: For derating values at specific junction temperature and voltage-supply levels, refer to Table 2-7 on page 2-9 for derating values.

Output DDR Module

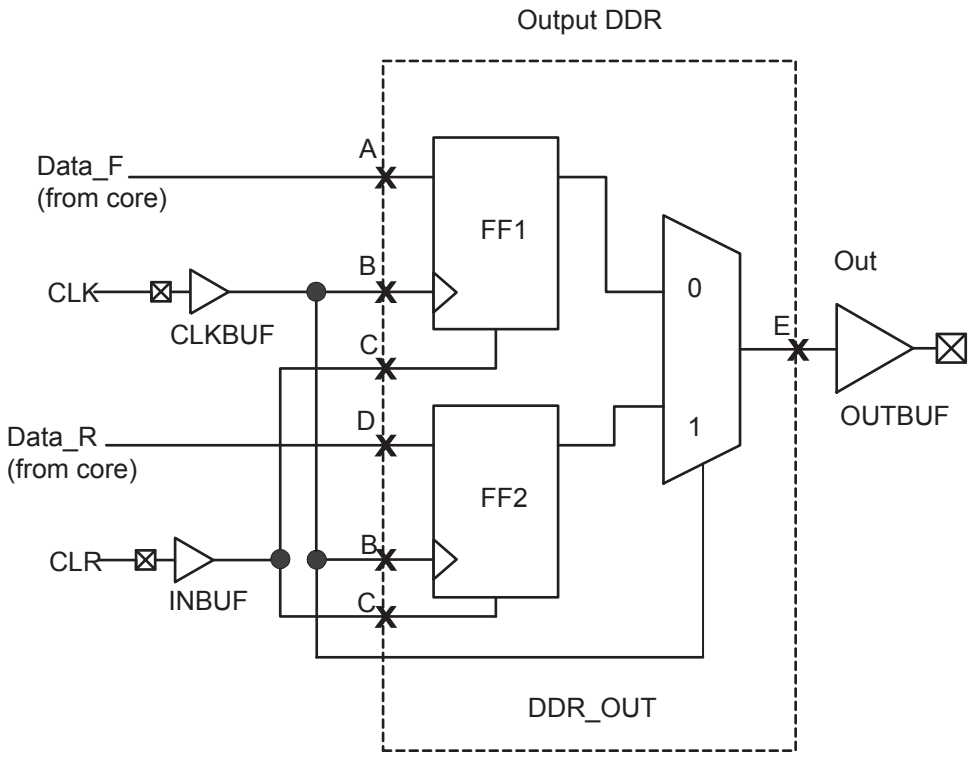

Figure 2-21 **• Output DDR Timing Model**

Table 2-76 **• Parameter Definitions**

Parameter Name	Parameter Definition	Measuring Nodes (from, to)
$t_{DDROCLKQ}$	Clock-to-Out	B, E
$t_{DDROCLR2Q}$	Asynchronous Clear-to-Out	C, E
$t_{DDROREMCLR}$	Clear Removal	C, B
$t_{DDRORECCLR}$	Clear Recovery	C, B
$t_{DDROSUD1}$	Data Setup Data_F	A, B
$t_{DDROSUD2}$	Data Setup Data_R	D, B
$t_{DDROHD1}$	Data Hold Data_F	A, B
$t_{DDROHD2}$	Data Hold Data_R	D, B

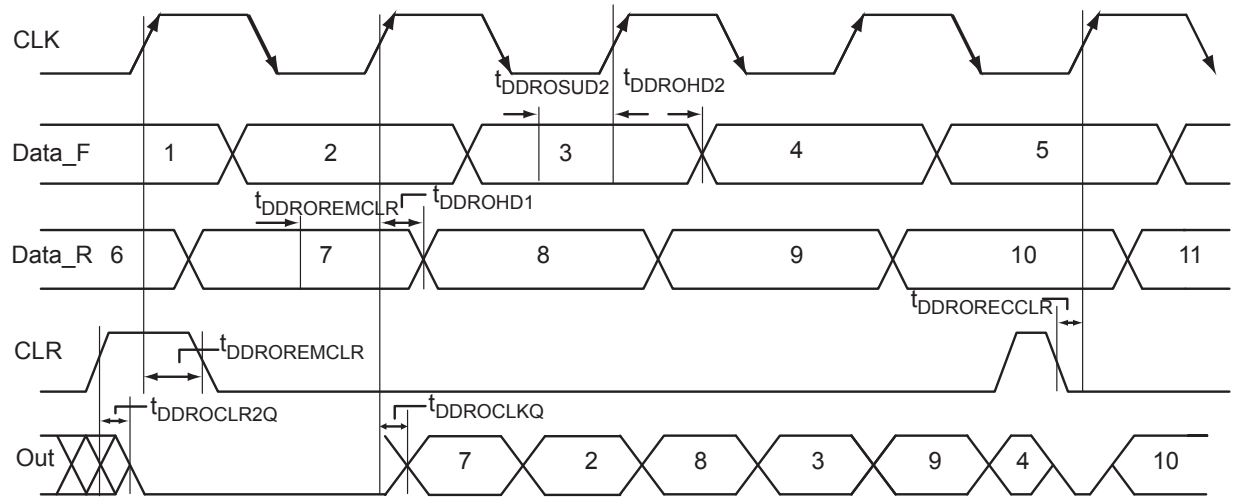

***Figure 2-22* • Output DDR Timing Diagram**

Timing Characteristics

***Table 2-77* • Output DDR Propagation Delays**
Worst Commercial-Case Conditions: T_J = 85°C, Worst-Case VCC = 1.425 V

Parameter	Description	–1	Units
$t_{DDROCLKQ}$	Clock-to-Out of DDR for Output DDR	0.71	ns
$t_{DDROSUD1}$	Data_F Data Setup for Output DDR	0.38	ns
$t_{DDROSUD2}$	Data_R Data Setup for Output DDR	0.38	ns
$t_{DDROHD1}$	Data_F Data Hold for Output DDR	0.00	ns
$t_{DDROHD2}$	Data_R Data Hold for Output DDR	0.00	ns
$t_{DDROCLR2Q}$	Asynchronous Clear-to-Out for Output DDR	0.81	ns
$t_{DDROREMCLR}$	Asynchronous Clear Removal Time for Output DDR	0.00	ns
$t_{DDRORECCLR}$	Asynchronous Clear Recovery Time for Output DDR	0.23	ns
$t_{DDROWCLR1}$	Asynchronous Clear Minimum Pulse Width for Output DDR	0.22	ns
$t_{DDROCKMPWH}$	Clock Minimum Pulse Width High for the Output DDR	0.36	ns
$t_{DDROCKMPWL}$	Clock Minimum Pulse Width Low for the Output DDR	0.32	ns
F_{DDOMAX}	Maximum Frequency for the Output DDR	350	MHz

Note: For specific junction temperature and voltage supply levels, refer to Table 2-7 on page 2-9 for derating values.

VersaTile Characteristics

VersaTile Specifications as a Combinatorial Module

The SmartFusion library offers all combinations of LUT-3 combinatorial functions. In this section, timing characteristics are presented for a sample of the library. For more details, refer to the *IGLOO/e, Fusion, ProASIC3/E, and SmartFusion Macro Library Guide*.

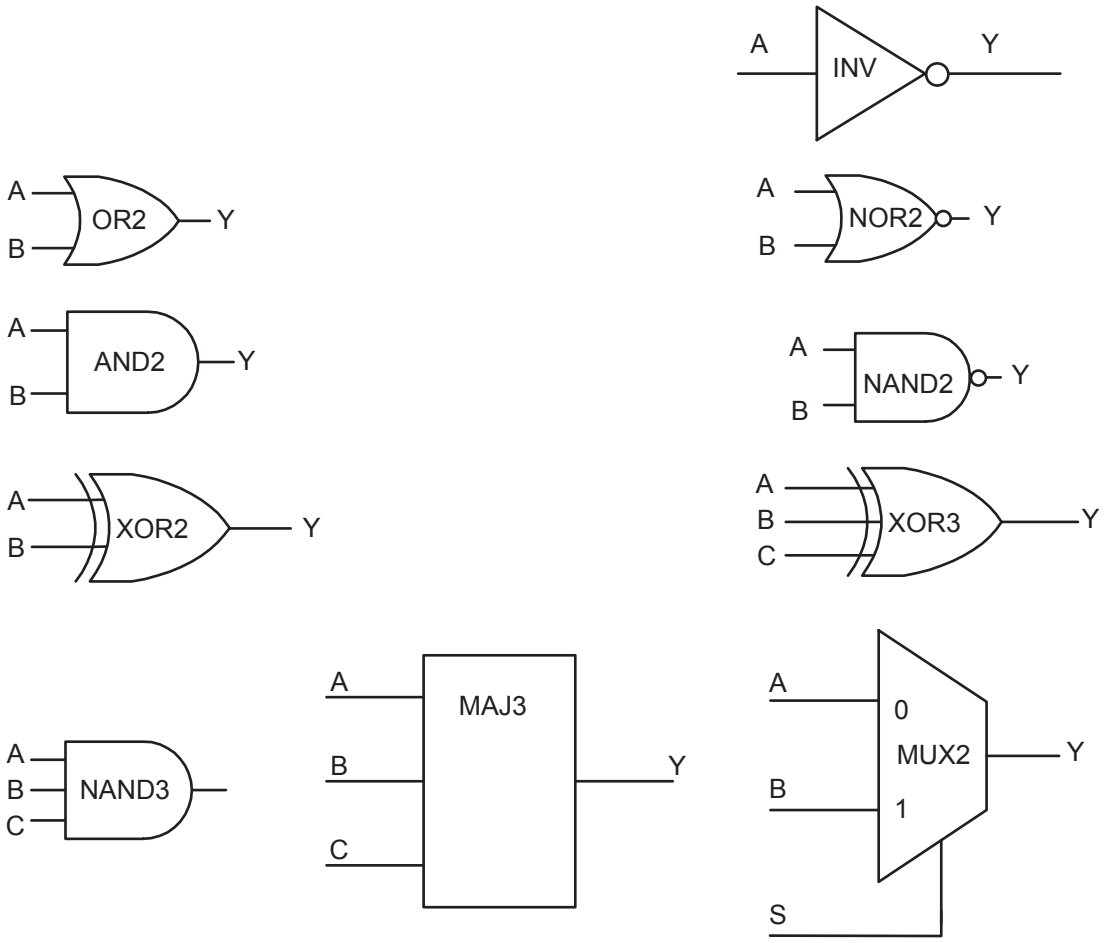

Figure 2-23 **• Sample of Combinatorial Cells**

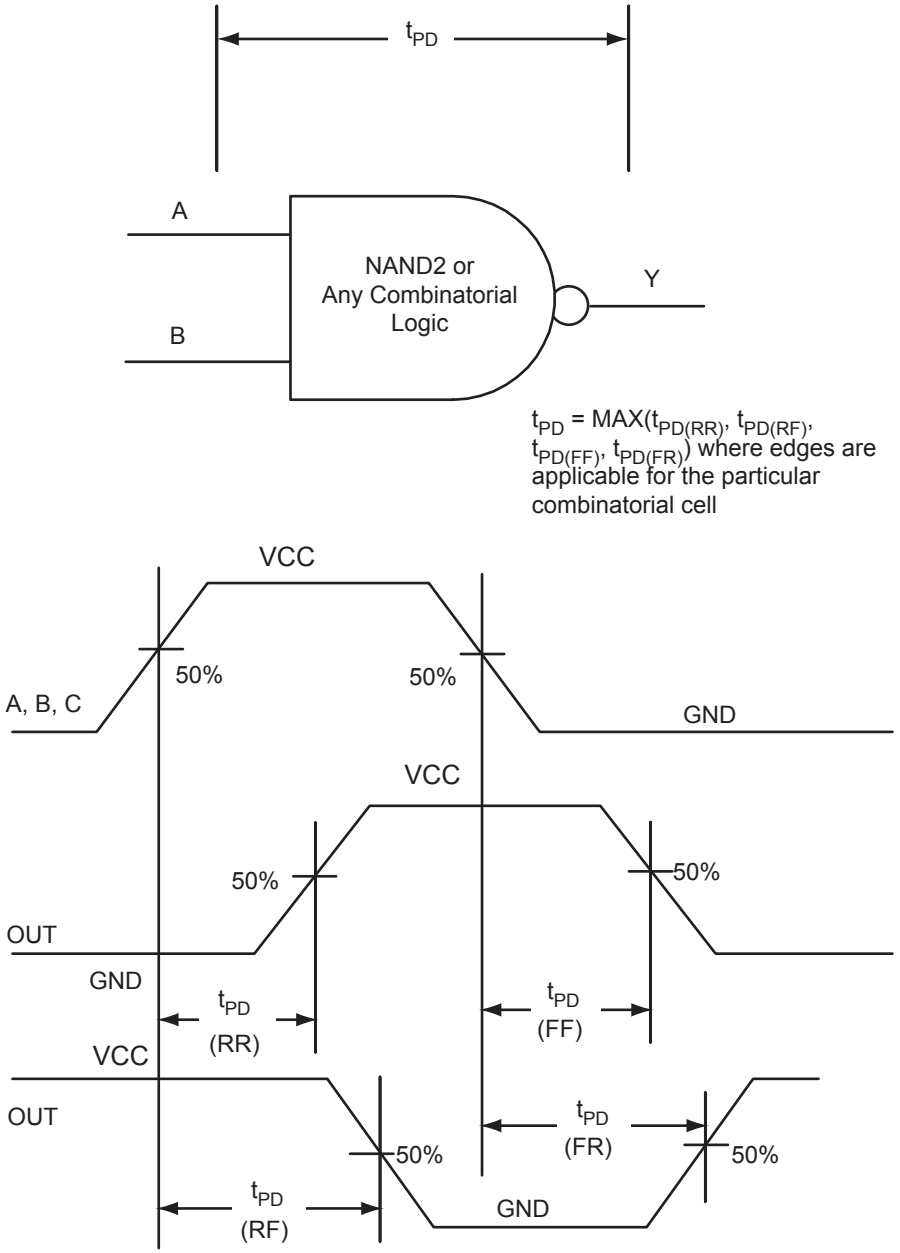

Figure 2-24 **• Timing Model and Waveforms**

Timing Characteristics

***Table 2-78* • Combinatorial Cell Propagation Delays**
Worst Commercial-Case Conditions: T_J = 85°C, Worst-Case VCC = 1.425 V

Combinatorial Cell	Equation	Parameter	–1	Std.	Units
INV	Y = !A	t_{PD}	0.41	0.49	ns
AND2	Y = A · B	t_{PD}	0.48	0.57	ns
NAND2	Y = !(A · B)	t_{PD}	0.48	0.57	ns
OR2	Y = A + B	t_{PD}	0.49	0.59	ns
NOR2	Y = !(A + B)	t_{PD}	0.49	0.59	ns
XOR2	Y = A ⊕ B	t_{PD}	0.75	0.90	ns
MAJ3	Y = MAJ(A, B, C)	t_{PD}	0.71	0.85	ns
XOR3	Y = A ⊕ B ⊕ C	t_{PD}	0.89	1.07	ns
MUX2	Y = A !S + B S	t_{PD}	0.51	0.62	ns
AND3	Y = A · B · C	t_{PD}	0.57	0.68	ns

Note: For specific junction temperature and voltage supply levels, refer to Table 2-7 on page 2-9 for derating values.

VersaTile Specifications as a Sequential Module

The SmartFusion library offers a wide variety of sequential cells, including flip-flops and latches. Each has a data input and optional enable, clear, or preset. In this section, timing characteristics are presented for a representative sample from the library. For more details, refer to the *IGLOO/e, Fusion, ProASIC3/E, and SmartFusion Macro Library Guide*.

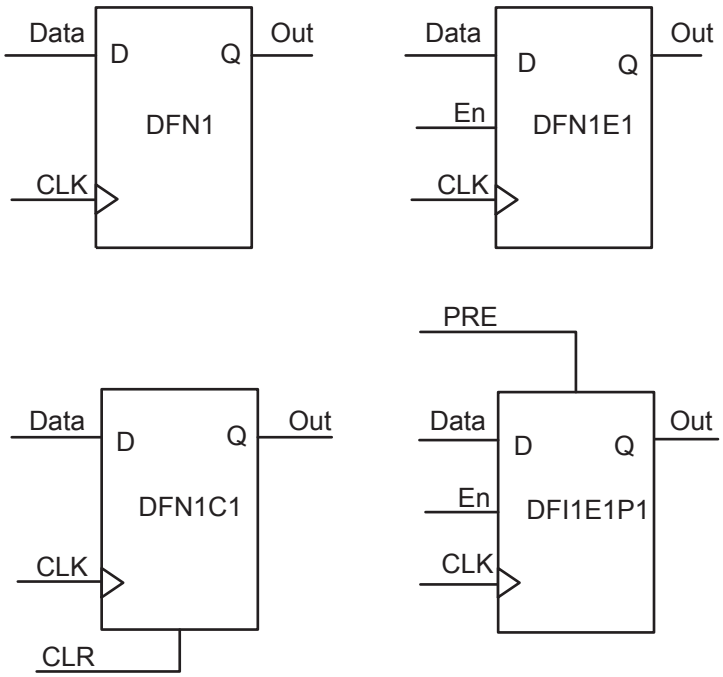

***Figure 2-25* • Sample of Sequential Cells**

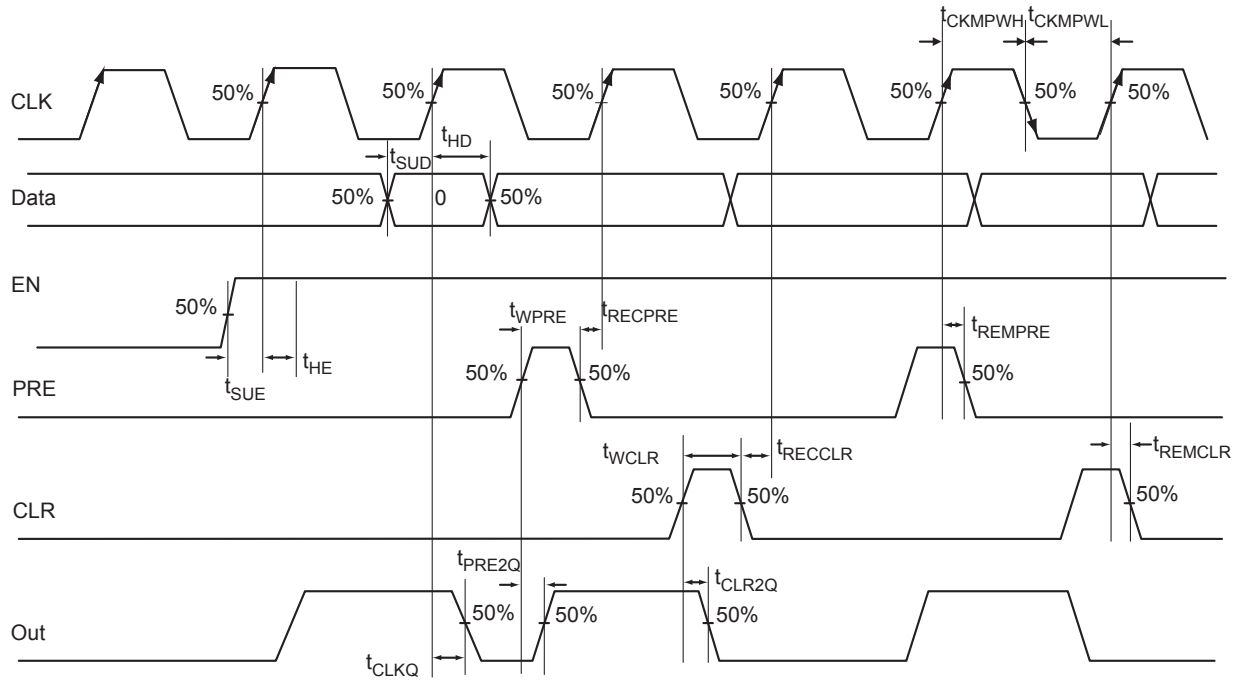

Figure 2-26 **• Timing Model and Waveforms**

Timing Characteristics

Table 2-79 **• Register Delays**
Worst Commercial-Case Conditions: T_J = 85°C, Worst-Case VCC = 1.425 V

Parameter	Description	–1	Std.	Units
t_{CLKQ}	Clock-to-Q of the Core Register	0.56	0.67	ns
t_{SUD}	Data Setup Time for the Core Register	0.44	0.52	ns
t_{HD}	Data Hold Time for the Core Register	0.00	0.00	ns
t_{SUE}	Enable Setup Time for the Core Register	0.46	0.55	ns
t_{HE}	Enable Hold Time for the Core Register	0.00	0.00	ns
t_{CLR2Q}	Asynchronous Clear-to-Q of the Core Register	0.41	0.49	ns
t_{PRE2Q}	Asynchronous Preset-to-Q of the Core Register	0.41	0.49	ns
t_{REMCLR}	Asynchronous Clear Removal Time for the Core Register	0.00	0.00	ns
t_{RECCLR}	Asynchronous Clear Recovery Time for the Core Register	0.23	0.27	ns
t_{REMPRE}	Asynchronous Preset Removal Time for the Core Register	0.00	0.00	ns
t_{RECPRE}	Asynchronous Preset Recovery Time for the Core Register	0.23	0.27	ns
t_{WCLR}	Asynchronous Clear Minimum Pulse Width for the Core Register	0.22	0.22	ns
t_{WPRE}	Asynchronous Preset Minimum Pulse Width for the Core Register	0.22	0.22	ns
t_{CKMPWH}	Clock Minimum Pulse Width High for the Core Register	0.32	0.32	ns
t_{CKMPWL}	Clock Minimum Pulse Width Low for the Core Register	0.36	0.36	ns

Note: For specific junction temperature and voltage supply levels, refer to Table 2-7 on page 2-9 for derating values.

Global Resource Characteristics

A2F200 Clock Tree Topology

Clock delays are device-specific. Figure 2-27 is an example of a global tree used for clock routing. The global tree presented in Figure 2-27 is driven by a CCC located on the west side of the A2F200 device. It is used to drive all D-flip-flops in the device.

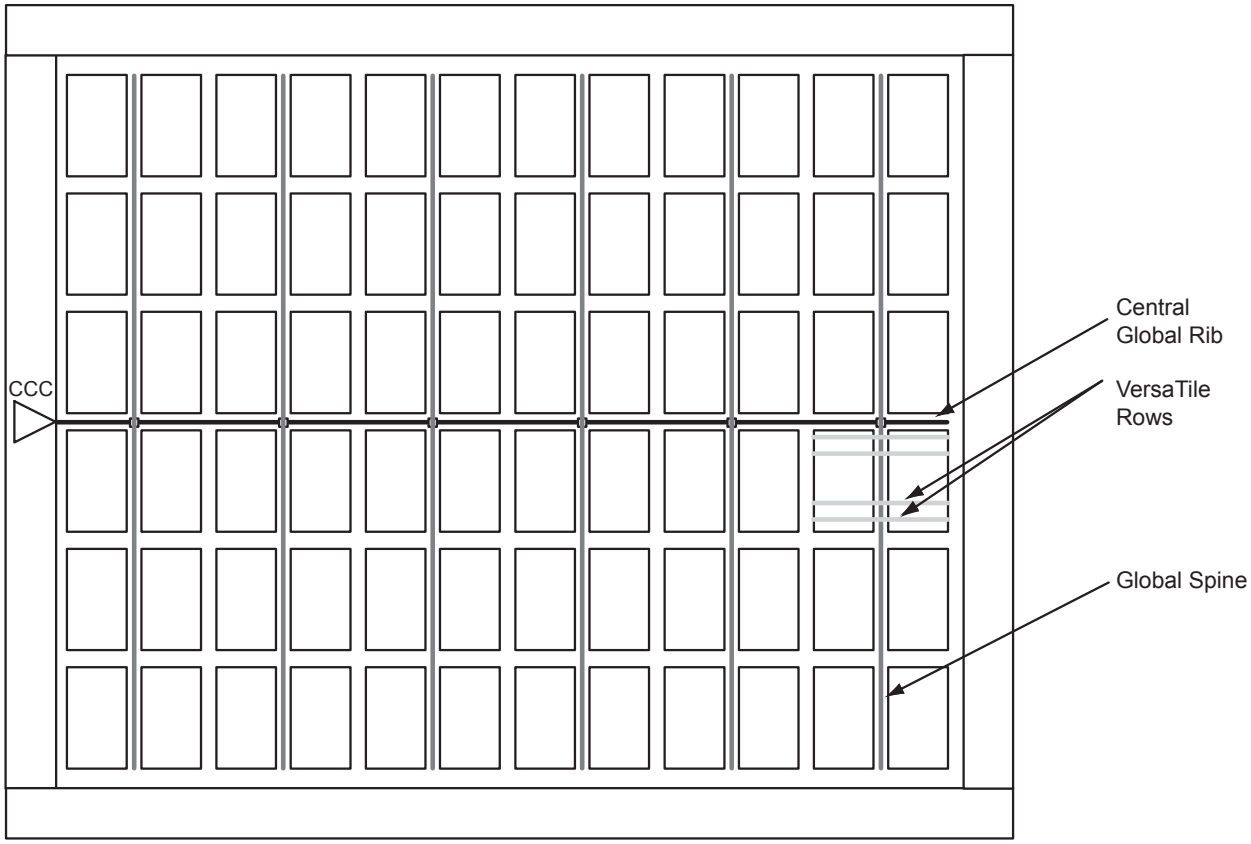

Figure 2-27 **• Example of Global Tree Use in an A2F200 Device for Clock Routing**

Global Tree Timing Characteristics

Global clock delays include the central rib delay, the spine delay, and the row delay. Delays do not include I/O input buffer clock delays, as these are I/O standard–dependent, and the clock may be driven and conditioned internally by the CCC module. For more details on clock conditioning capabilities, refer to the "Clock Conditioning Circuits" section on page 2-63. Table 2-80 through Table 2-82 on page 2-61 present minimum and maximum global clock delays for the SmartFusion cSoCs. Minimum and maximum delays are measured with minimum and maximum loading.

Timing Characteristics

***Table 2-80* • A2F500 Global Resource**
Worst Commercial-Case Conditions: T_J = 85°C, VCC = 1.425 V

Parameter	Description	–1		Std.		Units
		Min.[1]	Max.[2]	Min.[1]	Max.[2]	
t_{RCKL}	Input Low Delay for Global Clock	1.54	1.73	1.84	2.08	ns
t_{RCKH}	Input High Delay for Global Clock	1.53	1.76	1.84	2.12	ns
$t_{RCKMPWH}$	Minimum Pulse Width High for Global Clock	0.85		1.00		ns
$t_{RCKMPWL}$	Minimum Pulse Width Low for Global Clock	0.85		1.00		ns
t_{RCKSW}	Maximum Skew for Global Clock		0.23		0.28	ns

Notes:

1. *Value reflects minimum load. The delay is measured from the CCC output to the clock pin of a sequential element, located in a lightly loaded row (single element is connected to the global net).*
2. *Value reflects maximum load. The delay is measured on the clock pin of the farthest sequential element, located in a fully loaded row (all available flip-flops are connected to the global net in the row).*
3. *For specific junction temperature and voltage-supply levels, refer to Table 2-7 on page 2-9 for derating values.*

***Table 2-81* • A2F200 Global Resource**
Worst Commercial-Case Conditions: T_J = 85°C, VCC = 1.425 V

Parameter	Description	–1		Std.		Units
		Min.[1]	Max.[2]	Min.[1]	Max.[2]	
t_{RCKL}	Input Low Delay for Global Clock	0.74	0.99	0.88	1.19	ns
t_{RCKH}	Input High Delay for Global Clock	0.76	1.05	0.91	1.26	ns
$t_{RCKMPWH}$	Minimum Pulse Width High for Global Clock	0.85		1.00		ns
$t_{RCKMPWL}$	Minimum Pulse Width Low for Global Clock	0.85		1.00		ns
t_{RCKSW}	Maximum Skew for Global Clock		0.29		0.35	ns

Notes:

1. *Value reflects minimum load. The delay is measured from the CCC output to the clock pin of a sequential element, located in a lightly loaded row (single element is connected to the global net).*
2. *Value reflects maximum load. The delay is measured on the clock pin of the farthest sequential element, located in a fully loaded row (all available flip-flops are connected to the global net in the row).*
3. *For specific junction temperature and voltage-supply levels, refer to Table 2-7 on page 2-9 for derating values.*

***Table 2-82* • A2F060 Global Resource**
Worst Commercial-Case Conditions: T_J = 85°C, VCC = 1.425 V

Parameter	Description	–1		Std.		Units
		Min.[1]	Max.[2]	Min.[1]	Max.[2]	
t_{RCKL}	Input Low Delay for Global Clock	0.75	0.96	0.90	1.15	ns
t_{RCKH}	Input High Delay for Global Clock	0.72	0.98	0.86	1.17	ns
$t_{RCKMPWH}$	Minimum Pulse Width High for Global Clock	0.85		1.00		ns
$t_{RCKMPWL}$	Minimum Pulse Width Low for Global Clock	0.85		1.00		ns
t_{RCKSW}	Maximum Skew for Global Clock		0.26		0.31	ns

Notes:

1. *Value reflects minimum load. The delay is measured from the CCC output to the clock pin of a sequential element, located in a lightly loaded row (single element is connected to the global net).*
2. *Value reflects maximum load. The delay is measured on the clock pin of the farthest sequential element, located in a fully loaded row (all available flip-flops are connected to the global net in the row).*
3. *For specific junction temperature and voltage-supply levels, refer to Table 2-7 on page 2-9 for derating values.*

RC Oscillator

The table below describes the electrical characteristics of the RC oscillator.

RC Oscillator Characteristics

***Table 2-83* • Electrical Characteristics of the RC Oscillator**

Parameter	Description	Condition	Min.	Typ.	Max.	Units
FRC	Operating frequency			100		MHz
	Accuracy	Temperature: –40°C to 100°C Voltage: 3.3 V ± 5%		1		%
	Output jitter	Period jitter (at 5 K cycles)		100		ps RMS
		Cycle-to-cycle jitter (at 5 K cycles)		100		ps RMS
		Period jitter (at 5 K cycles) with 1 KHz / 300 mV peak-to-peak noise on power supply		150		ps RMS
		Cycle-to-cycle jitter (at 5 K cycles) with 1 KHz / 300 mV peak-to-peak noise on power supply		150		ps RMS
	Output duty cycle			50		%
IDYNRC	Operating current	3.3 V domain		1		mA
		1.5 V domain		2		mA

Main and Lower Power Crystal Oscillator

The tables below describes the electrical characteristics of the main and low power crystal oscillator.

***Table 2-84* • Electrical Characteristics of the Main Crystal Oscillator**

Parameter	Description	Condition	Min.	Typ.	Max.	Units
	Operating frequency	Using external crystal	0.032		20	MHz
		Using ceramic resonator	0.5		8	MHz
		Using RC Network	0.032		4	MHz
	Output duty cycle			50		%
	Output jitter	With 10 MHz crystal		1		ns RMS
IDYNXTAL	Operating current	RC		0.6		mA
		0.032–0.2		0.6		mA
		0.2–2.0		0.6		mA
		2.0–20.0		0.6		mA
ISTBXTAL	Standby current of crystal oscillator			10		µA
PSRRXTAL	Power supply noise tolerance			0.5		Vp-p
VIHXTAL	Input logic level High		90% of VCC			V
VILXTAL	Input logic level Low				10% of VCC	V
	Startup time	RC [Tested at 3.24Mhz]		300	550	µs
		0.032–0.2 [Tested at 32KHz]		500	3,000	µs
		0.2–2.0 [Tested at 2MHz]		8	12	µs
		2.0–20.0 [Tested at 20MHz]		160	180	µs

***Table 2-85* • Electrical Characteristics of the Low Power Oscillator**

Parameter	Description	Condition	Min.	Typ.	Max.	Units
	Operating frequency			32		KHz
	Output duty cycle			50		%
	Output jitter			30		ns RMS
IDYNXTAL	Operating current	32 KHz		10		µA
ISTBXTAL	Standby current of crystal oscillator			2		µA
PSRRXTAL	Power supply noise tolerance			0.5		Vp-p
VIHXTAL	Input logic level High		90% of VCC			V
VILXTAL	Input logic level Low				10% of VCC	V
	Startup time	Test load used: 20 pF		2.5		s
		Test load used: 30 pF		3.7	13	s

Clock Conditioning Circuits

CCC Electrical Specifications

Timing Characteristics

***Table 2-86* • SmartFusion CCC/PLL Specification**

Parameter	Minimum	Typical	Maximum	Units
Clock Conditioning Circuitry Input Frequency f_{IN_CCC}	1.5		350	MHz
Clock Conditioning Circuitry Output Frequency f_{OUT_CCC}	0.75		350[1]	MHz
Delay Increments in Programmable Delay Blocks[2,3,4]		160		ps
Number of Programmable Values in Each Programmable Delay Block			32	
Input Period Jitter			1.5	ns
Acquisition Time				
LockControl = 0			300	µs
LockControl = 1			6.0	ms
Tracking Jitter[5]				
LockControl = 0			1.6	ns
LockControl = 1			0.8	ns
Output Duty Cycle	48.5		5.15	%
Delay Range in Block: Programmable Delay 1[2,3]	0.6		5.56	ns
Delay Range in Block: Programmable Delay 2[2,3]	0.025		5.56	ns
Delay Range in Block: Fixed Delay[2,3]		2.2		ns

CCC Output Peak-to-Peak Period Jitter F_{CCC_OUT} [6,7]	Maximum Peak-to-Peak Period Jitter							
	SSO ≤ 2		**SSO ≤ 4**		**SSO ≤ 8**		**SSO ≤ 16**	
	FG/CS	**PQ**	**FG/CS**	**PQ**	**FG/CS**	**PQ**	**FG/CS**	**PQ**
0.75 MHz to 50 MHz	0.5%	1.6%	0.9%	1.6%	0.9%	1.6%	0.9%	1.8%
50 MHz to 250 MHz	1.75%	3.5%	9.3%	9.3%	9.3%	17.9%	10.0%	17.9%
250 MHz to 350 MHz	2.5%	5.2%	13.0%	13.0%	13.0%	25.0%	14.0%	25.0%

Notes:

1. *One of the CCC outputs (GLA0) is used as an MSS clock and is limited to 100 MHz (maximum) by software. Details regarding CCC/PLL are in the "PLLs, Clock Conditioning Circuitry, and On-Chip Crystal Oscillators" chapter of the* SmartFusion Microcontroller Subsystem User's Guide.
2. *This delay is a function of voltage and temperature. See Table 2-7 on page 2-9 for deratings.*
3. *T_J = 25°C, VCC = 1.5 V*
4. *When the CCC/PLL core is generated by Microsemi core generator software, not all delay values of the specified delay increments are available. Refer to the Libero SoC Online Help associated with the core for more information.*
5. *Tracking jitter is defined as the variation in clock edge position of PLL outputs with reference to the PLL input clock edge. Tracking jitter does not measure the variation in PLL output period, which is covered by the period jitter parameter.*
6. *Measurement done with LVTTL 3.3 V 12 mA I/O drive strength and High slew rate. VCC/VCCPLL = 1.425 V, VCCI = 3.3V, 20 pF output load. All I/Os are placed outside of the PLL bank.*
7. *SSOs are outputs that are synchronous to a single clock domain and have their clock-to-out within ± 200 ps of each other.*
8. *VCO output jitter is calculated as a percentage of the VCO frequency. The jitter (in ps) can be calculated by multiplying the VCO period by the % jitter. The VCO jitter (in ps) applies to CCC_OUT regardless of the output divider settings. For example, if the jitter on VCO is 300 ps, the jitter on CCC_OUT is also 300 ps.*

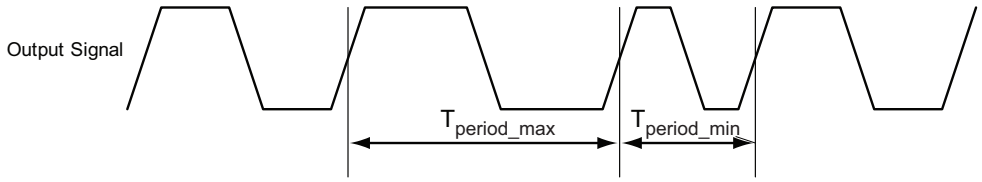

Note: Peak-to-peak jitter measurements are defined by $T_{peak\text{-}to\text{-}peak} = T_{period_max} - T_{period_min}$.

***Figure 2-28* • Peak-to-Peak Jitter Definition**

FPGA Fabric SRAM and FIFO Characteristics

FPGA Fabric SRAM

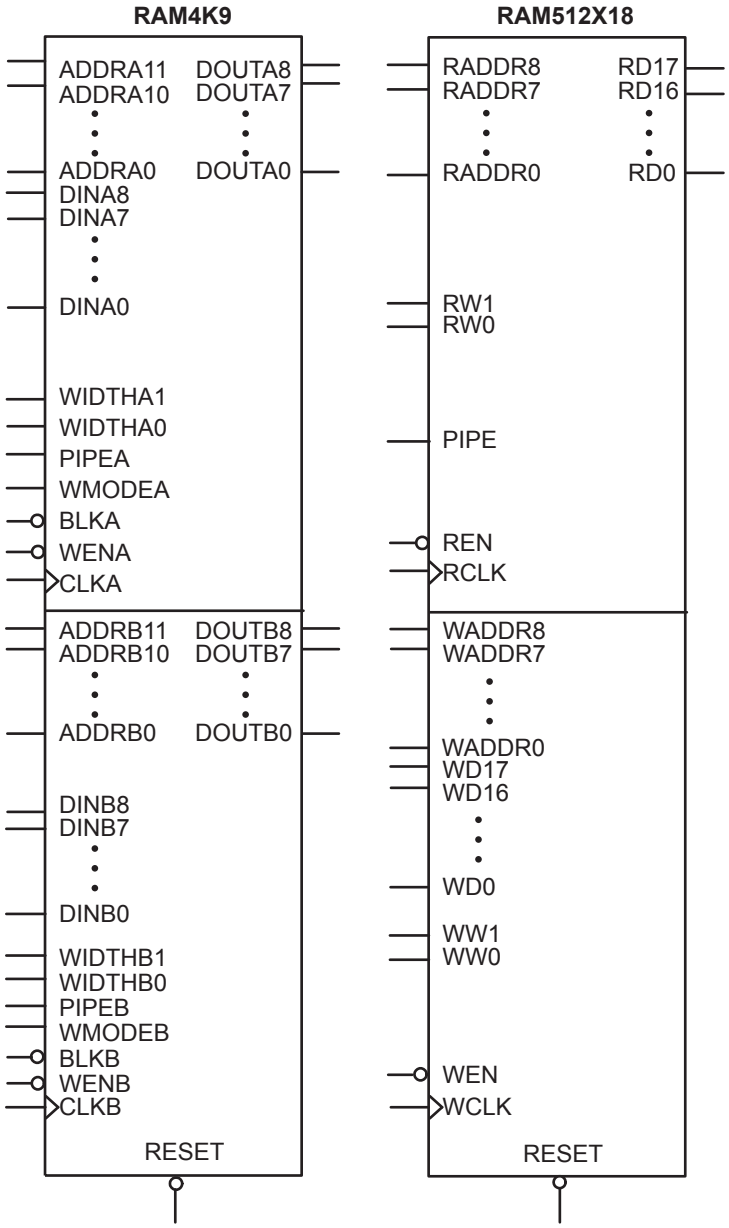

Figure 2-29 **• RAM Models**

Timing Waveforms

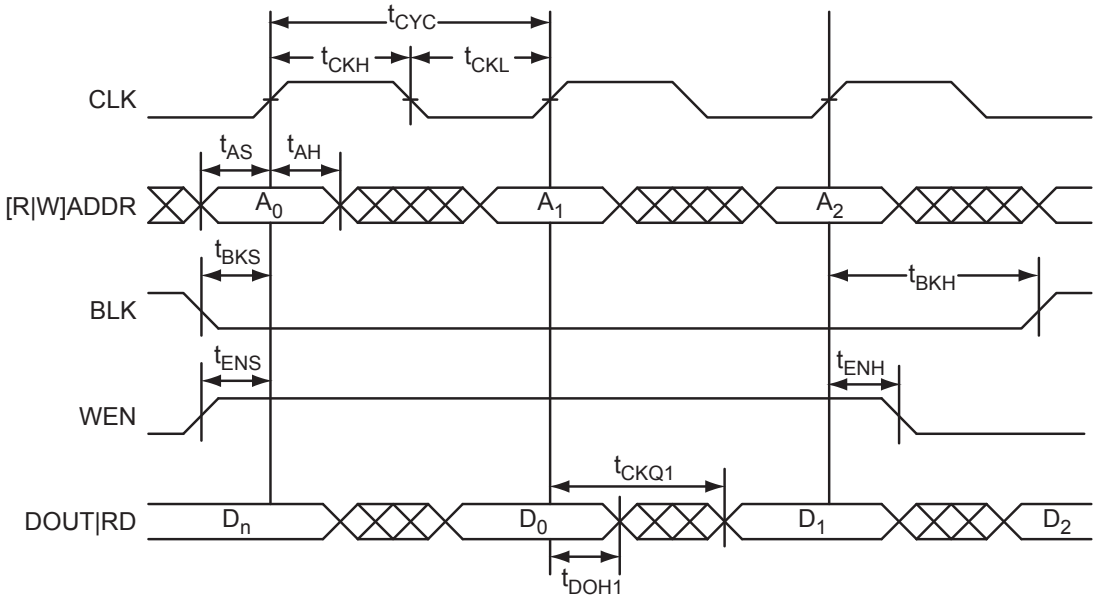

Figure 2-30 **• RAM Read for Pass-Through Output. Applicable to both RAM4K9 and RAM512x18.**

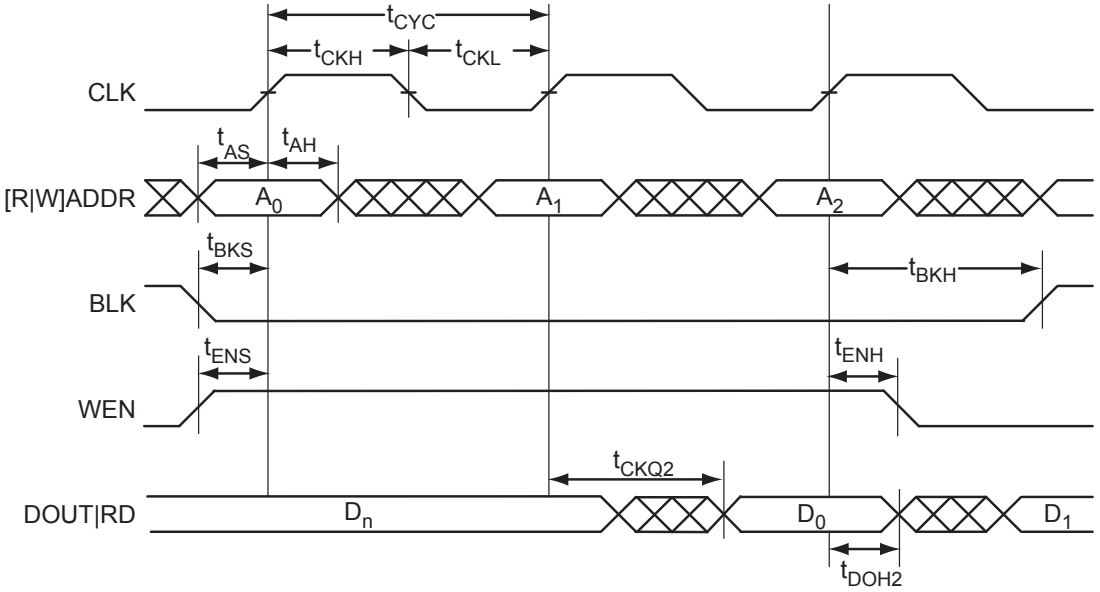

Figure 2-31 **• RAM Read for Pipelined Output Applicable to both RAM4K9 and RAM512x18.**

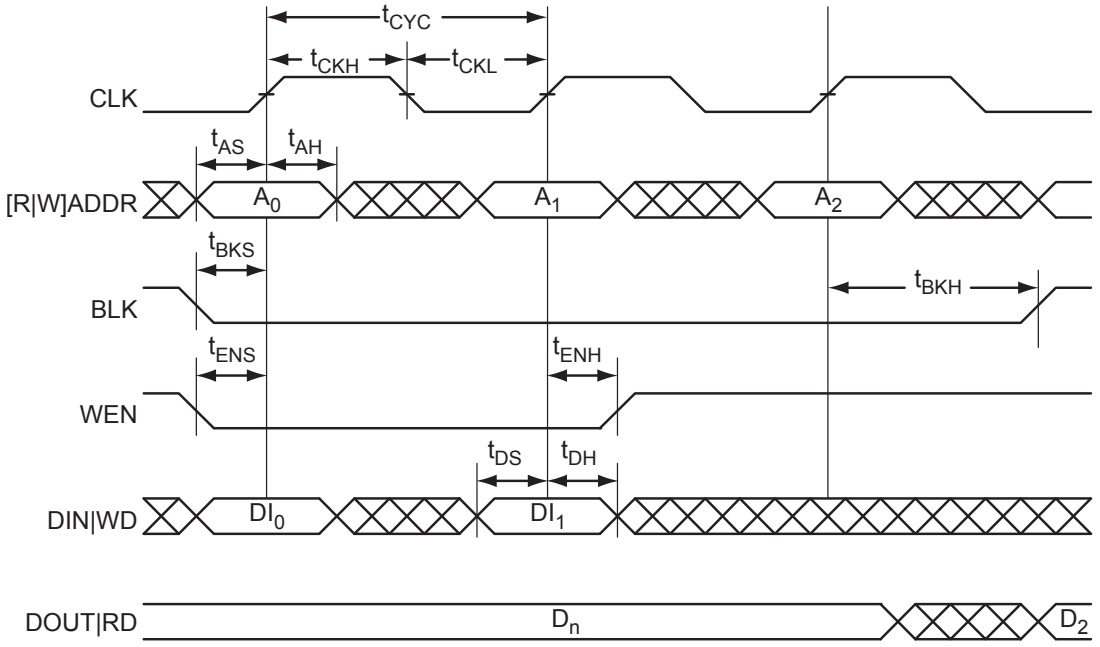

Figure 2-32 **• RAM Write, Output Retained. Applicable to both RAM4K9 and RAM512x18.**

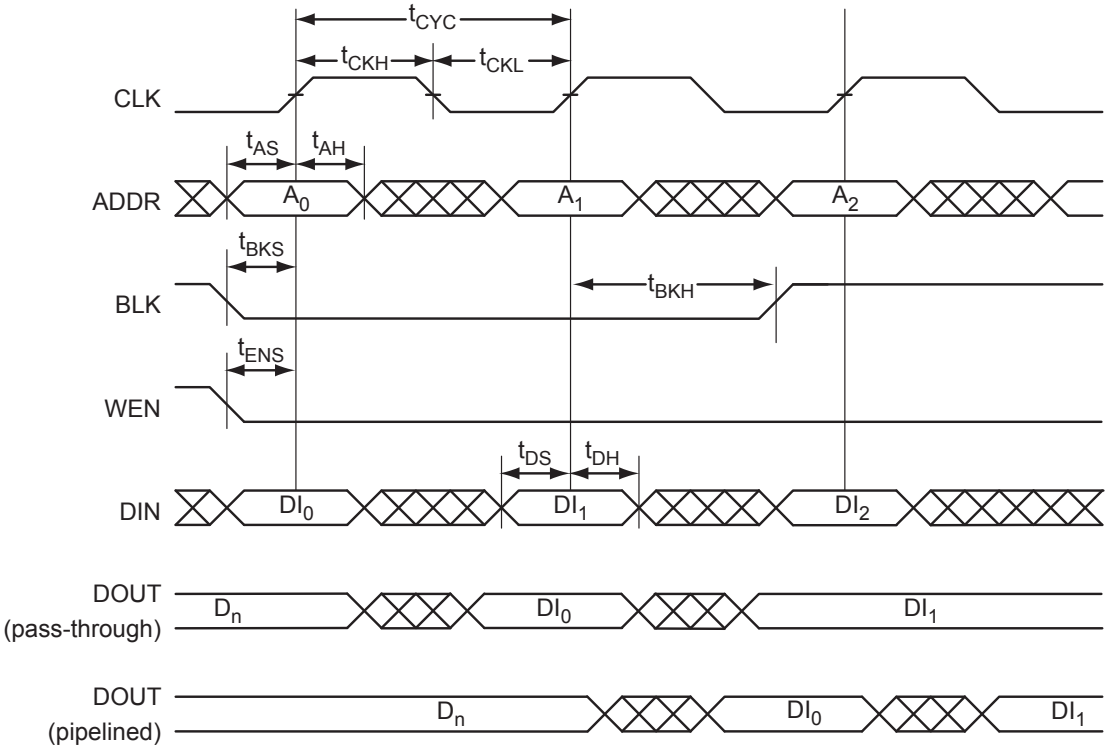

Figure 2-33 **• RAM Write, Output as Write Data (WMODE = 1). Applicable to RAM4K9 only.**

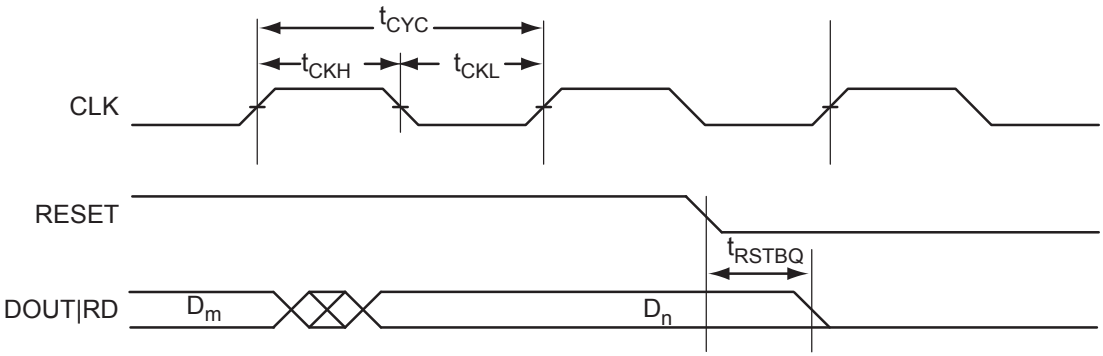

Figure 2-34 **• RAM Reset. Applicable to both RAM4K9 and RAM512x18.**

Timing Characteristics

***Table 2-87* • RAM4K9**
Worst Commercial-Case Conditions: T_J = 85°C, Worst-Case VCC = 1.425 V

Parameter	Description	–1	Std.	Units
t_{AS}	Address setup time	0.25	0.30	ns
t_{AH}	Address hold time	0.00	0.00	ns
t_{ENS}	REN, WEN setup time	0.15	0.17	ns
t_{ENH}	REN, WEN hold time	0.10	0.12	ns
t_{BKS}	BLK setup time	0.24	0.28	ns
t_{BKH}	BLK hold time	0.02	0.02	ns
t_{DS}	Input data (DIN) setup time	0.19	0.22	ns
t_{DH}	Input data (DIN) hold time	0.00	0.00	ns
t_{CKQ1}	Clock High to new data valid on DOUT (output retained, WMODE = 0)	1.81	2.18	ns
	Clock High to new data valid on DOUT (flow-through, WMODE = 1)	2.39	2.87	ns
t_{CKQ2}	Clock High to new data valid on DOUT (pipelined)	0.91	1.09	ns
t_{C2CWWH}[1]	Address collision clk-to-clk delay for reliable write after write on same address—applicable to rising edge	0.23	0.26	ns
t_{C2CRWH}[1]	Address collision clk-to-clk delay for reliable read access after write on same address—applicable to opening edge	0.34	0.38	ns
t_{C2CWRH}[1]	Address collision clk-to-clk delay for reliable write access after read on same address— applicable to opening edge	0.37	0.42	ns
t_{RSTBQ}	RESET Low to data out Low on DOUT (flow-through)	0.94	1.12	ns
	RESET Low to Data Out Low on DOUT (pipelined)	0.94	1.12	ns
$t_{REMRSTB}$	RESET removal	0.29	0.35	ns
$t_{RECRSTB}$	RESET recovery	1.52	1.83	ns
$t_{MPWRSTB}$	RESET minimum pulse width	0.22	0.22	ns
t_{CYC}	Clock cycle time	3.28	3.28	ns
F_{MAX}	Maximum clock frequency	305	305	MHz

Notes:

1. *For more information, refer to the* Simultaneous Read-Write Operations in Dual-Port SRAM for Flash-Based cSoCs and FPGAs *application note.*
2. *For the derating values at specific junction temperature and voltage supply levels, refer to Table 2-7 on page 2-9 for derating values.*

***Table 2-88* • RAM512X18**
Worst Commercial-Case Conditions: T_J = 85°C, Worst-Case VCC = 1.425 V

Parameter	Description	–1	Std.	Units
t_{AS}	Address setup time	0.25	0.30	ns
t_{AH}	Address hold time	0.00	0.00	ns
t_{ENS}	REN, WEN setup time	0.09	0.11	ns
t_{ENH}	REN, WEN hold time	0.06	0.07	ns
t_{DS}	Input data (WD) setup time	0.19	0.22	ns
t_{DH}	Input data (WD) hold time	0.00	0.00	ns
t_{CKQ1}	Clock High to new data valid on RD (output retained, WMODE = 0)	2.19	2.63	ns
t_{CKQ2}	Clock High to new data valid on RD (pipelined)	0.91	1.09	ns
t_{C2CRWH}[1]	Address collision clk-to-clk delay for reliable read access after write on same address—applicable to opening edge	0.38	0.43	ns
t_{C2CWRH}[1]	Address collision clk-to-clk delay for reliable write access after read on same address—applicable to opening edge	0.44	0.50	ns
t_{RSTBQ}	RESET Low to data out Low on RD (flow-through)	0.94	1.12	ns
	RESET Low to data out Low on RD (pipelined)	0.94	1.12	ns
$t_{REMRSTB}$	RESET removal	0.29	0.35	ns
$t_{RECRSTB}$	RESET recovery	1.52	1.83	ns
$t_{MPWRSTB}$	RESET minimum pulse width	0.22	0.22	ns
t_{CYC}	Clock cycle time	3.28	3.28	ns
F_{MAX}	Maximum clock frequency	305	305	MHz

Notes:

1. *For more information, refer to the* Simultaneous Read-Write Operations in Dual-Port SRAM for Flash-Based cSoCs and FPGAs *application note.*
2. *For the derating values at specific junction temperature and voltage supply levels, refer to Table 2-7 on page 2-9 for derating values.*

FIFO

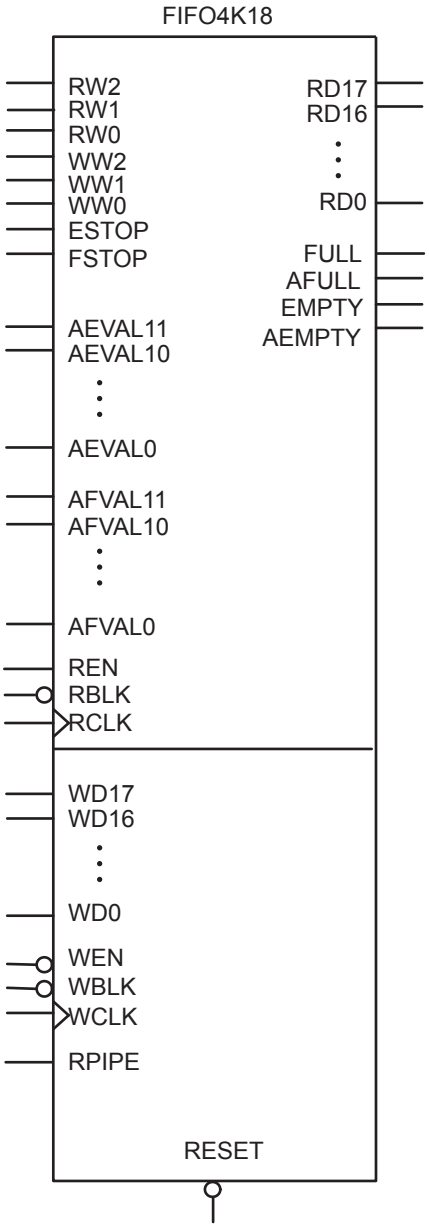

Figure 2-35 **• FIFO Model**

Timing Waveforms

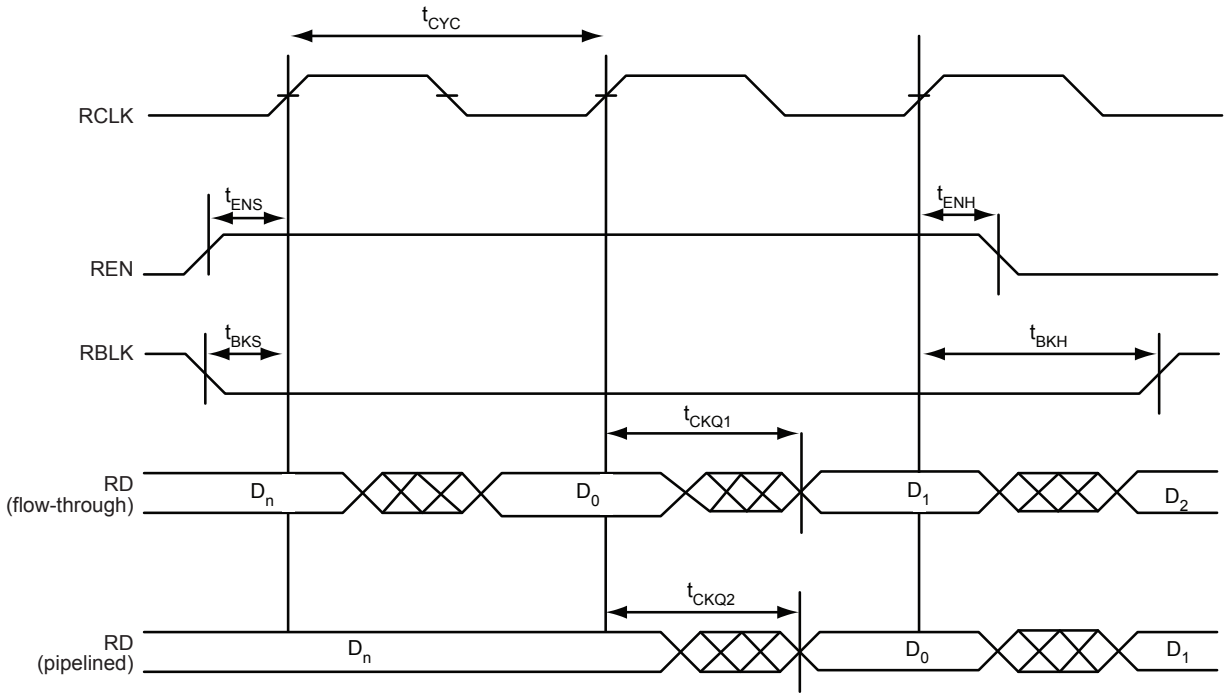

Figure 2-36 **• FIFO Read**

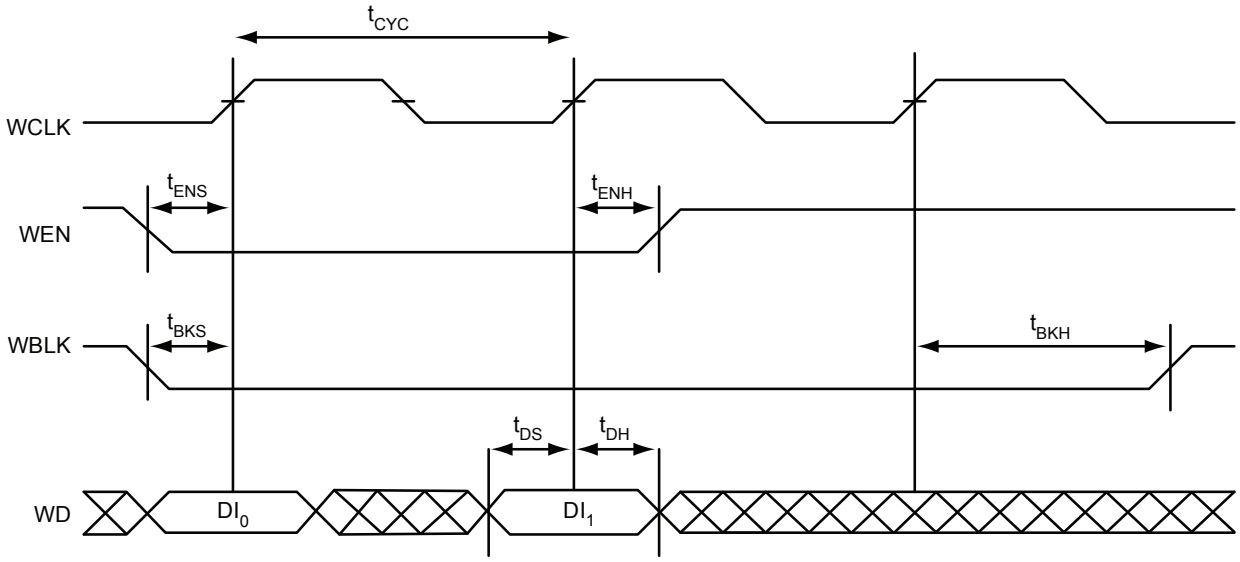

Figure 2-37 **• FIFO Write**

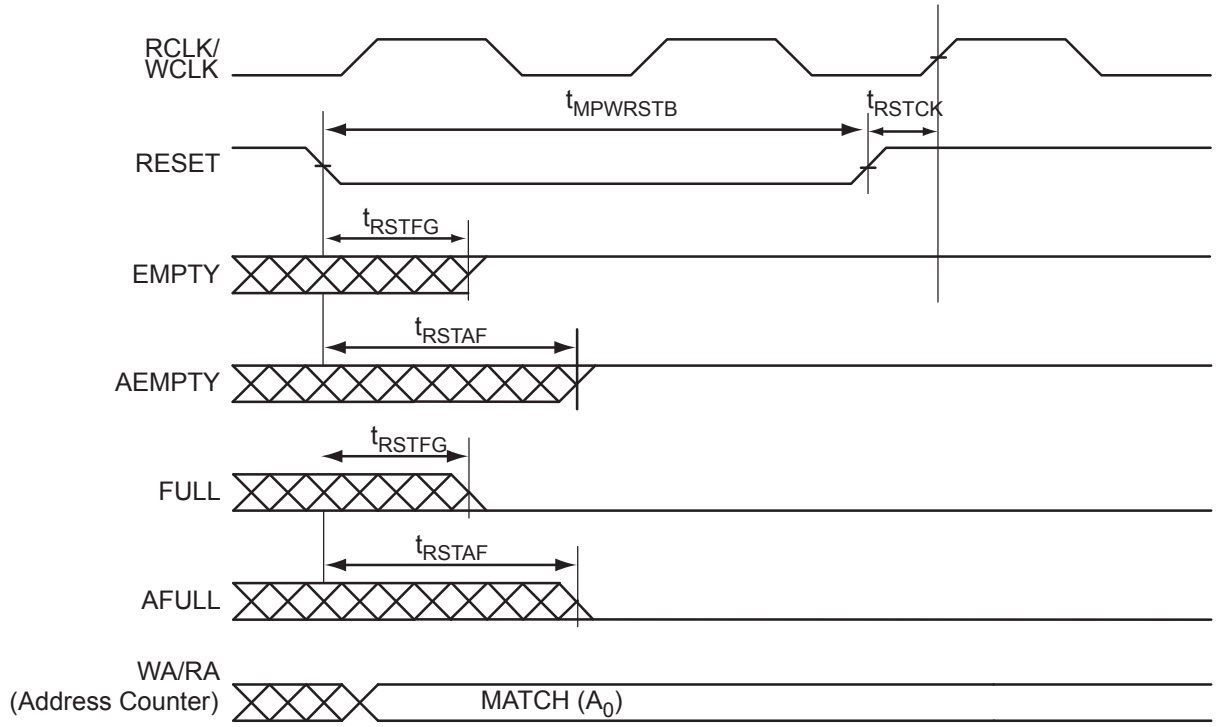

Figure 2-38 **• FIFO Reset**

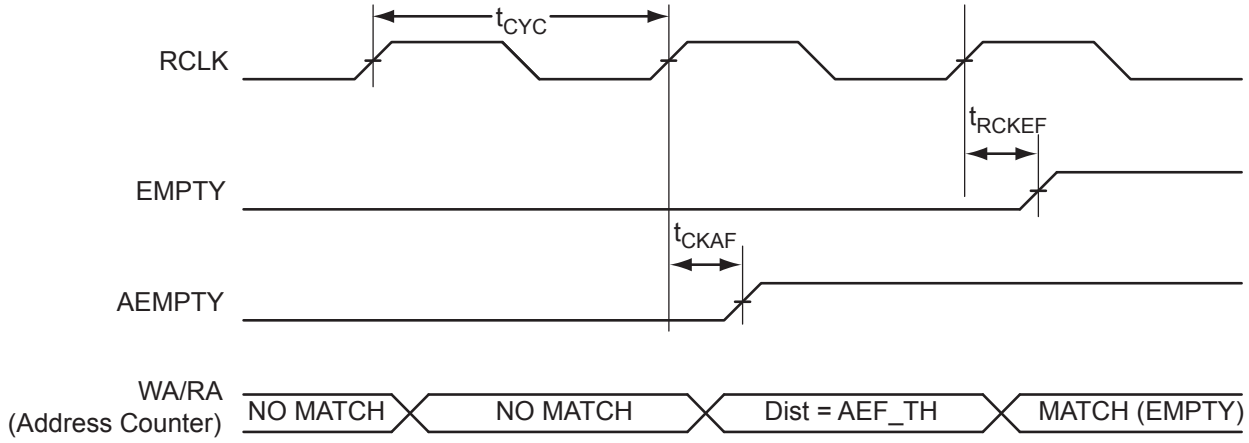

Figure 2-39 **• FIFO EMPTY Flag and AEMPTY Flag Assertion**

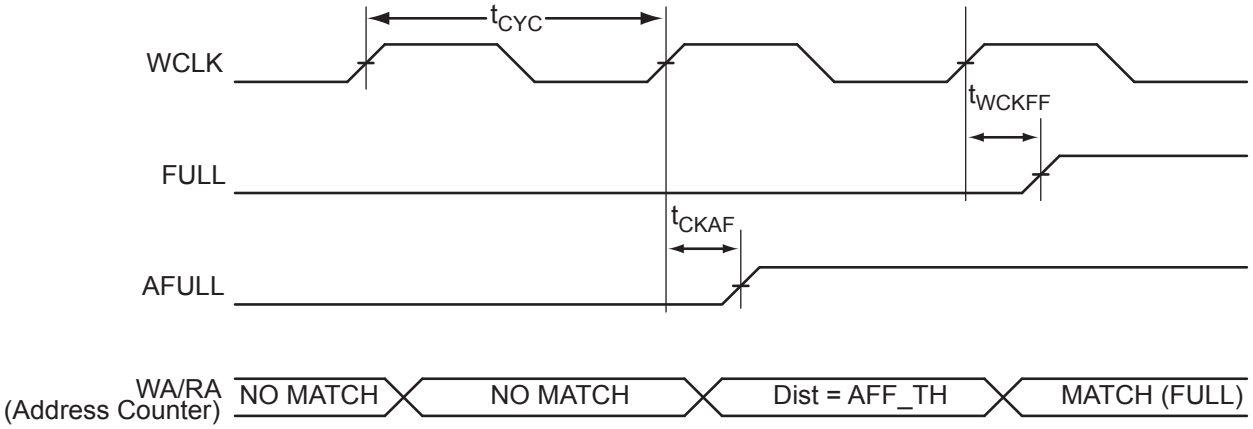

***Figure 2-40* • FIFO FULL Flag and AFULL Flag Assertion**

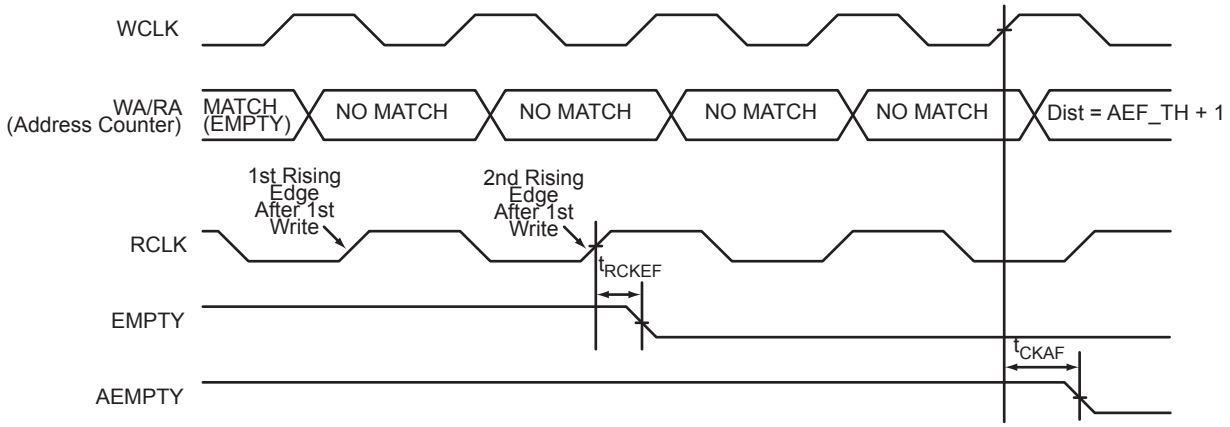

***Figure 2-41* • FIFO EMPTY Flag and AEMPTY Flag Deassertion**

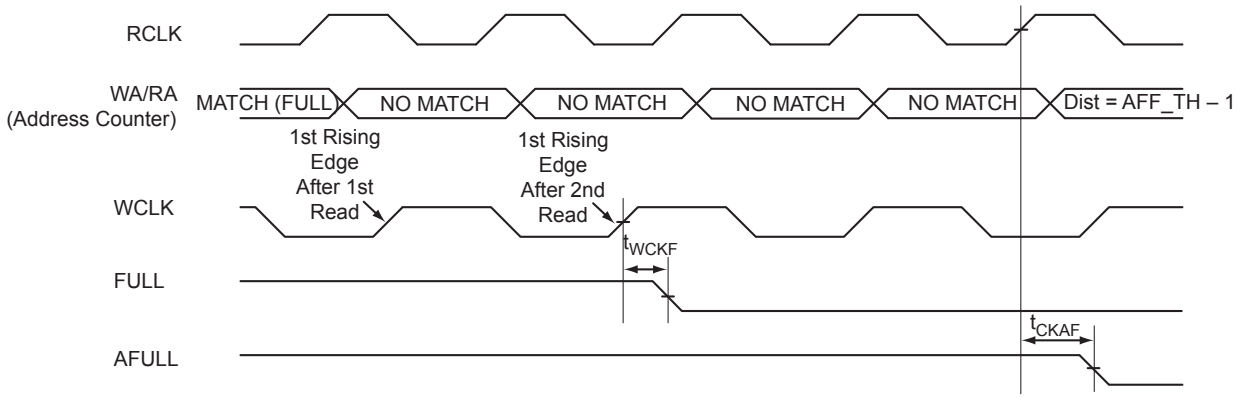

***Figure 2-42* • FIFO FULL Flag and AFULL Flag Deassertion**

Timing Characteristics

***Table 2-89* • FIFO**
Worst Commercial-Case Conditions: T_J = 85°C, VCC = 1.425 V

Parameter	Description	–1	Std.	Units
t_{ENS}	REN, WEN Setup Time	1.40	1.68	ns
t_{ENH}	REN, WEN Hold Time	0.02	0.02	ns
t_{BKS}	BLK Setup Time	0.19	0.19	ns
t_{BKH}	BLK Hold Time	0.00	0.00	ns
t_{DS}	Input Data (WD) Setup Time	0.19	0.22	ns
t_{DH}	Input Data (WD) Hold Time	0.00	0.00	ns
t_{CKQ1}	Clock High to New Data Valid on RD (flow-through)	2.39	2.87	ns
t_{CKQ2}	Clock High to New Data Valid on RD (pipelined)	0.91	1.09	ns
t_{RCKEF}	RCLK High to Empty Flag Valid	1.74	2.09	ns
t_{WCKFF}	WCLK High to Full Flag Valid	1.66	1.99	ns
t_{CKAF}	Clock HIGH to Almost Empty/Full Flag Valid	6.29	7.54	ns
t_{RSTFG}	RESET Low to Empty/Full Flag Valid	1.72	2.06	ns
t_{RSTAF}	RESET Low to Almost Empty/Full Flag Valid	6.22	7.47	ns
t_{RSTBQ}	RESET Low to Data Out Low on RD (flow-through)	0.94	1.12	ns
	RESET Low to Data Out Low on RD (pipelined)	0.94	1.12	ns
$t_{REMRSTB}$	RESET Removal	0.29	0.35	ns
$t_{RECRSTB}$	RESET Recovery	1.52	1.83	ns
$t_{MPWRSTB}$	RESET Minimum Pulse Width	0.22	0.22	ns
t_{CYC}	Clock Cycle Time	3.28	3.28	ns
F_{MAX}	Maximum Frequency for FIFO	305	305	MHz

Note: For specific junction temperature and voltage supply levels, refer to Table 2-7 on page 2-9 for derating values.

Embedded Nonvolatile Memory Block (eNVM)

Electrical Characteristics

Table 2-90 describes the eNVM maximum performance.

***Table 2-90* • eNVM Block Timing, Worst Commercial Case Conditions: T_J = 85°C, VCC = 1.425 V**

Parameter	Description	A2F060		A2F200		A2F500		Units
		–1	Std.	–1	Std.	–1	Std.	
$t_{FMAXCLKeNVM}$	Maximum frequency for clock for the control logic – 5 cycles (5:1:1:1*)	80	80	80	80	50	50	MHz
$t_{FMAXCLKeNVM}$	Maximum frequency for clock for the control logic – 6 cycles (6:1:1:1*)	100	80	100	80	100	80	MHz

*Note: *6:1:1:1 indicates 6 cycles for the first access and 1 each for the next three accesses. 5:1:1:1 indicates 5 cycles for the first access and 1 each for the next three accesses.*

Embedded FlashROM (eFROM)

Electrical Characteristics

Table 2-91 describes the eFROM maximum performance

***Table 2-91* • FlashROM Access Time, Worse Commercial Case Conditions: T_J = 85°C, VCC = 1.425 V**

Parameter	Description	–1	Std.	Units
t_{CK2Q}	Clock to out per configuration*	28.68	32.98	ns
F_{max}	Maximum Clock frequency	15.00	15.00	MHz

JTAG 1532 Characteristics

JTAG timing delays do not include JTAG I/Os. To obtain complete JTAG timing, add I/O buffer delays to the corresponding standard selected; refer to the I/O timing characteristics in the "User I/O Characteristics" section on page 2-19 for more details.

Timing Characteristics

***Table 2-92* • JTAG 1532**
Worst Commercial-Case Conditions: T_J = 85°C, Worst-Case VCC = 1.425 V

Parameter	Description	–1	Std.	Units
t_{DISU}	Test Data Input Setup Time	0.67	0.77	ns
t_{DIHD}	Test Data Input Hold Time	1.33	1.53	ns
t_{TMSSU}	Test Mode Select Setup Time	0.67	0.77	ns
t_{TMDHD}	Test Mode Select Hold Time	1.33	1.53	ns
t_{TCK2Q}	Clock to Q (data out)	8.00	9.20	ns
t_{RSTB2Q}	Reset to Q (data out)	26.67	30.67	ns
F_{TCKMAX}	TCK Maximum Frequency	19.00	21.85	MHz
$t_{TRSTREM}$	ResetB Removal Time	0.00	0.00	ns
$t_{TRSTREC}$	ResetB Recovery Time	0.27	0.31	ns
$t_{TRSTMPW}$	ResetB Minimum Pulse	TBD	TBD	ns

Note: For specific junction temperature and voltage supply levels, refer to Table 2-7 on page 2-9 for derating values.

Programmable Analog Specifications

Current Monitor

Unless otherwise noted, current monitor performance is specified at 25°C with nominal power supply voltages, with the output measured using the internal voltage reference with the internal ADC in 12-bit mode and 91 Ksps, after digital compensation. All results are based on averaging over 16 samples.

***Table 2-93* • Current Monitor Performance Specification**

Specification	Test Conditions	Min.	Typical	Max.	Units
Input voltage range (for driving ADC over full range)		0 – 48	0 – 50	1 – 51	mV
Analog gain	From the differential voltage across the input pads to the ADC input		50		V/V
Input referred offset voltage	Input referred offset voltage	0	0.1	0.5	mV
	–40ºC to +100ºC	0	0.1	0.5	mV
Gain error	Slope of BFSL vs. 50 V/V		±0.1	±0.5	% nom.
	–40ºC to +100ºC			±0.5	% nom.
Overall Accuracy	Peak error from ideal transfer function, 25°C		±(0.1 + 0.25%)	±(0.4 + 1.5%)	mV plus % reading
Input referred noise	0 VDC input (no output averaging)	0.3	0.4	0.5	mVrms
Common-mode rejection ratio	0 V to 12 VDC common-mode voltage	–86	–87		dB
Analog settling time	To 0.1% of final value (with ADC load)				
	From CM_STB (High)	5			µs
	From ADC_START (High)	5		200	µs
Input capacitance			8		pF
Input biased current	CM[n] or TM[n] pad, –40°C to +100°C over maximum input voltage range (plus is into pad)				
	Strobe = 0; IBIAS on CM[n]		0		µA
	Strobe = 1; IBIAS on CM[n]		1		µA
	Strobe = 0; IBIAS on TM[n]		2		µA
	Strobe = 1; IBIAS on TM[n]		1		µA
Power supply rejection ratio	DC (0 – 10 KHz)	41	42		dB
Incremental operational current monitor power supply current requirements (per current monitor instance, not including ADC or VAREFx)	VCC33A		150		µA
	VCC33AP		140		µA
	VCC15A		50		µA

Note: Under no condition should the TM pad ever be greater than 10 mV above the CM pad. This restriction is applicable only if current monitor is used.

Temperature Monitor

Unless otherwise noted, temperature monitor performance is specified with a 2N3904 diode-connected bipolar transistor from National Semiconductor or Infineon Technologies, nominal power supply voltages, with the output measured using the internal voltage reference with the internal ADC in 12-bit mode and 62.5 Ksps. After digital compensation. Unless otherwise noted, the specifications pertain to conditions where the SmartFusion cSoC and the sensing diode are at the same temperature.

***Table 2-94* • Temperature Monitor Performance Specifications**

Specification	Test Conditions	Min.	Typical	Max.	Units
Input diode temperature range		–55		150	°C
		233.2		378.15	K
Temperature sensitivity			2.5		mV/K
Intercept	Extrapolated to 0K		0		V
Input referred temperature offset error	At 25°C (298.15K)		±1	1.5	°C
Gain error	Slope of BFSL vs. 2.5 mV/K		±1	2.5	% nom.
Overall accuracy	Peak error from ideal transfer function		±2	±3	°C
Input referred noise	At 25°C (298.15K) – no output averaging		4		°C rms
Output current	Idle mode		100		µA
	Final measurement phases		10		µA
Analog settling time	Measured to 0.1% of final value, (with ADC load)				
	From TM_STB (High)	5			µs
	From ADC_START (High)	5		105	µs
AT parasitic capacitance				500	pF
Power supply rejection ratio	DC (0–10 KHz)	1.2	0.7		°C/V
Input referred temperature sensitivity error	Variation due to device temperature (–40°C to +100°C). External temperature sensor held constant.		0.005	0.008	°C/°C
Temperature monitor (TM) operational power supply current requirements (per temperature monitor instance, not including ADC or VAREFx)	VCC33A		200		µA
	VCC33AP		150		µA
	VCC15A		50		µA

Note: All results are based on averaging over 64 samples.

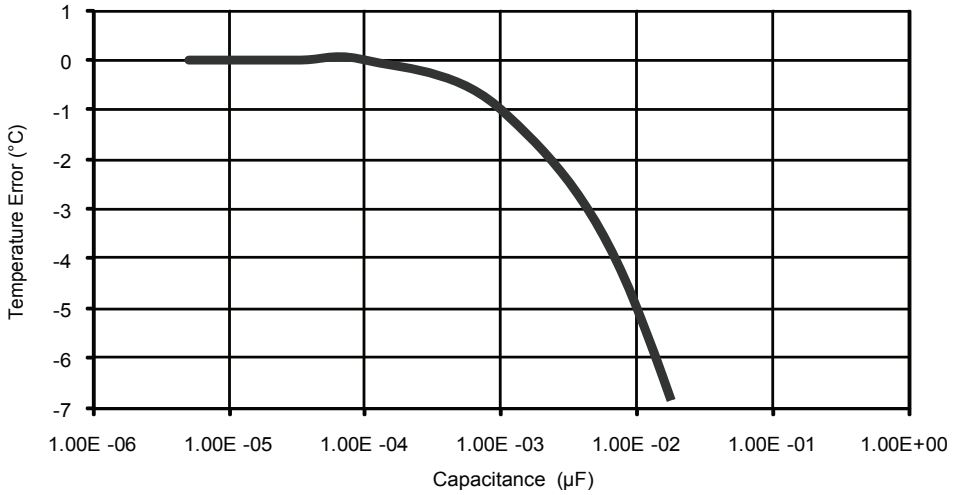

Figure 2-43 **• Temperature Error Versus External Capacitance**

Analog-to-Digital Converter (ADC)

Unless otherwise noted, ADC direct input performance is specified at 25°C with nominal power supply voltages, with the output measured using the external voltage reference with the internal ADC in 12-bit mode and 500 KHz sampling frequency, after trimming and digital compensation.

***Table 2-95* • ADC Specifications**

Specification	Test Conditions	Min.	Typ.	Max.	Units
Input voltage range (for driving ADC over its full range)			2.56		V
Gain error			±0.4	±0.7	%
	–40ºC to +100ºC		±0.4	±0.7	%
Input referred offset voltage			±1	±2	mV
	–40ºC to +100ºC		±1	±2	
Integral non-linearity (INL)	RMS deviation from BFSL				
	12-bit mode		1.71		LSB
	10-bit mode		0.60	1.00	LSB
	8-bit mode		0.2	0.33	LSB
Differential non-linearity (DNL)	12-bit mode		2.4		LSB
	10-bit mode		0.80	0.94	LSB
	8-bit mode		0.2	0.23	LSB
Signal to noise ratio		62	64		dB
Effective number of bits (ENOB) $ENOB = \frac{SINAD - 1.76\ dB}{6.02\ dB/bit}$ *EQ 10*	–1 dBFS input				
	12-bit mode 10 KHz	9.9	10		Bits
	12-bit mode 100 KHz	9.9	10		Bits
	10-bit mode 10 KHz	9.5	9.6		Bits
	10-bit mode 100 KHz	9.5	9.6		Bits
	8-bit mode 10 KHz	7.8	7.9		Bits
	8-bit mode 100 KHz	7.8	7.9		Bits
Full power bandwidth	At –3 dB; –1 dBFS input	300			KHz
Analog settling time	To 0.1% of final value (with 1 Kohm source impedance and with ADC load)		2		µs
Input capacitance	Switched capacitance (ADC sample capacitor)		12	15	pF
	Cs: Static capacitance (Figure 2-44 on page 2-81)				
	CM[n] input		5	7	pF
	TM[n] input		5	7	pF
	ADC[n] input		5	7	pF
Input resistance	Rin: Series resistance (Figure 2-44)		2		KΩ
	Rsh: Shunt resistance, exclusive of switched capacitance effects (Figure 2-44)	10			MΩ

Note: All 3.3 V supplies are tied together and varied from 3.0 V to 3.6 V. 1.5 V supplies are held constant.

***Table 2-95* • ADC Specifications (continued)**

Specification	Test Conditions	Min.	Typ.	Max.	Units
Input leakage current	–40°C to +100°C		1		µA
Power supply rejection ratio	DC	44	53		dB
ADC power supply operational current requirements	VCC33ADCx			2.5	mA
	VCC15A			2	mA

Note: All 3.3 V supplies are tied together and varied from 3.0 V to 3.6 V. 1.5 V supplies are held constant.

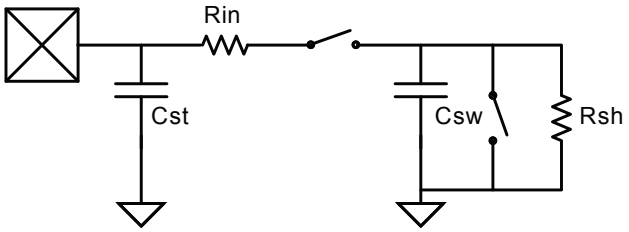

***Figure 2-44* • ADC Input Model**

***Table 2-96* • VAREF Stabilization Time**

VAREF Capacitor Value (µF)	Required Settling Time for 8-Bit and 10-Bit Mode (ms)	Required Settling Time for 12-Bit Mode (ms)
0.01	1	1
0.1	3	4
0.2	6	8
0.3	10	11
0.5	17	20
0.7	18	21
1	32	37
2.2	62	73
3.3	99	117
10	275	325
22	635	751
47	1318	1557

Analog Bipolar Prescaler (ABPS)

With the ABPS set to its high range setting (GDEC = 00), a hypothetical input voltage in the range –15.36 V to +15.36 V is scaled and offset by the ABPS input amplifier to match the ADC full range of 0 V to 2.56 V using a nominal gain of –0.08333 V/V. However, due to reliability considerations, the voltage applied to the ABPS input should never be outside the range of –11.5 V to +14.4 V, restricting the usable ADC input voltage to 2.238 V to 0.080 V and the corresponding 12-bit output codes to the range of 3581 to 128 (decimal), respectively.

Unless otherwise noted, ABPS performance is specified at 25°C with nominal power supply voltages, with the output measured using the internal voltage reference with the internal ADC in 12-bit mode and 100 KHz sampling frequency, after trimming and digital compensation; and applies to all ranges.

***Table 2-97* • ABPS Performance Specifications**

Specification	Test Conditions	Min.	Typ.	Max.	Units
Input voltage range (for driving ADC over its full range)	GDEC[1:0] = 11		±2.56		V
	GDEC[1:0] = 10		±5.12		V
	GDEC[1:0] = 01		±10.24		V
	GDEC[1:0] = 00 (limited by maximum rating)		See note 1		V
Analog gain (from input pad to ADC input)	GDEC[1:0] = 11		–0.5		V/V
	GDEC[1:0] = 10		–0.25		V/V
	GDEC[1:0] = 01		–0.125		V/V
	GDEC[1:0] = 00		–0.0833		V/V
Gain error		–2.8	–0.4	0.7	%
	–40ºC to +100ºC	–2.8	–0.4	0.7	%
Input referred offset voltage					
	GDEC[1:0] = 11	–0.31	–0.07	0.31	% FS*
	–40ºC to +100ºC	–1.00		1.47	% FS*
	GDEC[1:0] = 10	–0.34	–0.07	0.34	% FS*
	–40ºC to +100ºC	–0.90		1.37	% FS*
	GDEC[1:0] = 01	–0.61	–0.07	0.35	% FS*
	–40ºC to +100ºC	–1.05		1.35	% FS*
	GDEC[1:0] = 00	–0.39	–0.07	0.35	% FS*
	–40ºC to +100ºC	–1.06		1.38	% FS*
SINAD		53	56		dB
Non-linearity	RMS deviation from BFSL			0.5	% FS*

*Note: *FS is full-scale error, defined as the difference between the actual value that triggers the transition to full-scale and the ideal analog full-scale transition value. Full-scale error equals offset error plus gain error. Refer to the Analog-to-Digital Converter chapter of the* SmartFusion Programmable Analog User's Guide *for more information.*

***Table 2-97* • ABPS Performance Specifications (continued)**

Specification	Test Conditions	Min.	Typ.	Max.	Units
Effective number of bits (ENOB) $ENOB = \frac{SINAD - 1.76\ dB}{6.02\ dB/bit}$ *EQ 11*	GDEC[1:0] = 11 (±2.56 range), –1 dBFS input				
	12-bit mode 10 KHz	8.6	9.1		Bits
	12-bit mode 100 KHz	8.6	9.1		Bits
	10-bit mode 10 KHz	8.5	8.9		Bits
	10-bit mode 100 KHz	8.5	8.9		Bits
	8-bit mode 10 KHz	7.7	7.8		Bits
	8-bit mode 100 KHz	7.7	7.8		Bits
Large-signal bandwidth	–1 dBFS input		1		MHz
Analog settling time	To 0.1% of final value (with ADC load)			10	µs
Input resistance			1		MΩ
Power supply rejection ratio	DC (0–1 KHz)	38	40		dB
ABPS power supply current requirements (not including ADC or VAREFx)	ABPS_EN = 1 (operational mode)				
	VCC33A		123	134	µA
	VCC33AP		89	94	µA
	VCC15A		1		µA

*Note: *FS is full-scale error, defined as the difference between the actual value that triggers the transition to full-scale and the ideal analog full-scale transition value. Full-scale error equals offset error plus gain error. Refer to the Analog-to-Digital Converter chapter of the* SmartFusion Programmable Analog User's Guide *for more information.*

Comparator

Unless otherwise specified, performance is specified at 25°C with nominal power supply voltages.

***Table 2-98* • Comparator Performance Specifications**

Specification	Test Conditions		Min.	Typ.	Max.	Units
Input voltage range	Minimum			0		V
	Maximum			2.56		V
Input offset voltage	HYS[1:0] = 00 (no hysteresis)			±1	±3	mV
Input bias current	Comparator 1, 3, 5, 7, 9 (measured at 2.56 V)			40	100	nA
	Comparator 0, 2, 4, 6, 8 (measured at 2.56 V)			150	300	nA
Input resistance			10			MΩ
Power supply rejection ratio	DC (0 – 10 KHz)		50	60		dB
Propagation delay	100 mV overdrive					
	HYS[1:0] = 00					
	(no hysteresis)			15	18	ns
	100 mV overdrive					
	HYS[1:0] = 10					
	(with hysteresis)			25	30	ns
Hysteresis (± refers to rising and falling threshold shifts, respectively)	HYS[1:0] = 00	Typical (25°C)	0	0	±5	mV
		Across all corners (–40ºC to +100ºC)	0		±5	mV
	HYS[1:0] = 01	Typical (25°C)	±3	± 16	±30	mV
		Across all corners (–40ºC to +100ºC)	0		±36	mV
	HYS[1:0] = 10	Typical (25°C)	±19	± 31	±48	mV
		Across all corners (–40ºC to +100ºC)	±12		±54	mV
	HYS[1:0] = 11	Typical (25°C)	±80	± 105	±190	mV
		Across all corners (–40ºC to +100ºC)	±80		±194	mV
Comparator current requirements (per comparator)	VCC33A = 3.3 V (operational mode); COMP_EN = 1					
	VCC33A			150	165	µA
	VCC33AP			140	165	µA
	VCC15A			1	3	µA

Analog Sigma-Delta Digital to Analog Converter (DAC)

Unless otherwise noted, sigma-delta DAC performance is specified at 25°C with nominal power supply voltages, using the internal sigma-delta modulators with 16-bit inputs, HCLK = 100 MHz, modulator inputs updated at a 100 KHz rate, in voltage output mode with an external 160 pF capacitor to ground, after trimming and digital [pre-]compensation.

***Table 2-99* • Analog Sigma-Delta DAC**

Specification	Test Conditions	Min.	Typ.	Max.	Units
Resolution		8		24	Bits
Output range			0 to 2.56		V
	Current output mode		0 to 256		µA
Output Impedance		6	10	12	KΩ
	Current output mode	10			MΩ
Output voltage compliance	Current output mode		0–3.0		V
	–40ºC to +100ºC	0–2.7		0–3.4	V
Gain error	Voltage output mode		0.3	±2	%
	A2F060: –40ºC to +100ºC		0.3	±2	%
	A2F200: –40ºC to +100ºC		1.2	±5.3	%
	A2F500: –40ºC to +100ºC		0.3	±2	%
	Current output mode		0.3	±2	%
	A2F060: –40ºC to +100ºC		0.3	±2	%
	A2F200: –40ºC to +100ºC		1.2	±5.3	%
	A2F500: –40ºC to +100ºC		0.3	±2	%
Output referred offset	DACBYTE0 = h'00 (8-bit)		0.25	±1	mV
	–40ºC to +100ºC		1	±2.5	mV
	Current output mode		0.3	±1	µA
	–40ºC to +100ºC		1	±2.5	µA
Integral non-linearity	RMS deviation from BFSL		0.1	0.3	% FS*
Differential non-linearity			0.05	0.4	% FS*
Analog settling time			Refer to Figure 2-45 on page 2-86		µs
Power supply rejection ratio	DC, full scale output	33	34		dB

*Note: *FS is full-scale error, defined as the difference between the actual value that triggers the transition to full-scale and the ideal analog full-scale transition value. Full-scale error equals offset error plus gain error. Refer to the Analog-to-Digital Converter chapter of the* SmartFusion Programmable Analog User's Guide *for more information.*

***Table 2-99* • Analog Sigma-Delta DAC (continued)**

Specification	Test Conditions	Min.	Typ.	Max.	Units
Sigma-delta DAC power supply current requirements (not including VAREFx)	Input = 0, EN = 1 (operational mode)				
	VCC33SDDx		30	35	µA
	VCC15A		3	5	µA
	Input = Half scale, EN = 1 (operational mode)				
	VCC33SDDx		160	165	µA
	VCC15A		33	35	µA
	Input = Full scale, EN = 1 (operational mode)				
	VCC33SDDx		280	285	µA
	VCC15A		70	75	µA

*Note: *FS is full-scale error, defined as the difference between the actual value that triggers the transition to full-scale and the ideal analog full-scale transition value. Full-scale error equals offset error plus gain error. Refer to the Analog-to-Digital Converter chapter of the SmartFusion Programmable Analog User's Guide for more information.*

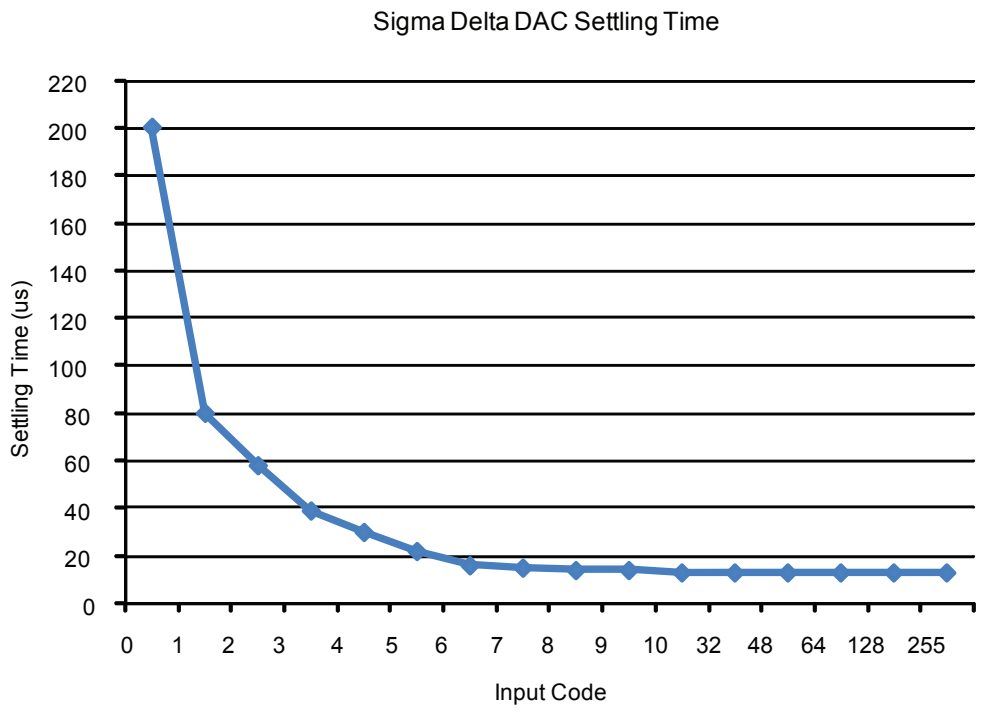

***Figure 2-45* • Sigma-Delta DAC Setting Time**

Voltage Regulator

***Table 2-100* • Voltage Regulator**

Symbol	Parameter	Test Conditions		Min.	Typ.	Max.	Unit
V_{OUT}	Output voltage	T_J = 25°C		1.425	1.5	1.575	V
V_{OS}	Output offset voltage	T_J = 25°C			11		mV
ICC33A	Operation current	T_J = 25°C	I_{LOAD} = 1 mA		3.4		mA
			I_{LOAD} = 100 mA		11		mA
			I_{LOAD} = 0.5 A		21		mA
ΔV_{OUT}	Load regulation	T_J = 25°C	I_{LOAD} = 1 mA to 0.5 A		5.8		mV
ΔV_{OUT}	Line regulation	T_J = 25°C	VCC33A = 2.97 V to 3.63 V I_{LOAD} = 1 mA		5.3		mV/V
			VCC33A = 2.97 V to 3.63 V I_{LOAD}= 100 mA		5.3		mV/V
			VCC33A = 2.97 V to 3.63 V I_{LOAD} = 500mA		5.3		mV/V
	Dropout voltage[1]	T_J = 25°C	I_{LOAD} = 1 mA		0.63		V
			I_{LOAD} = 100 mA		0.84		V
			I_{LOAD} = 0.5 A		1.35		V
I_{PTBASE}	PTBase current	T_J = 25°C	I_{LOAD} = 1 mA		48		µA
			I_{LOAD} = 100 mA		736		µA
			I_{LOAD} = 0.5 A		12		mA
	Startup time[2]	T_J = 25°C			200		µs

Notes:

1. *Dropout voltage is defined as the minimum VCC33A voltage. The parameter is specified with respect to the output voltage. The specification represents the minimum input-to-output differential voltage required to maintain regulation.*
2. *Assumes 10 µF.*

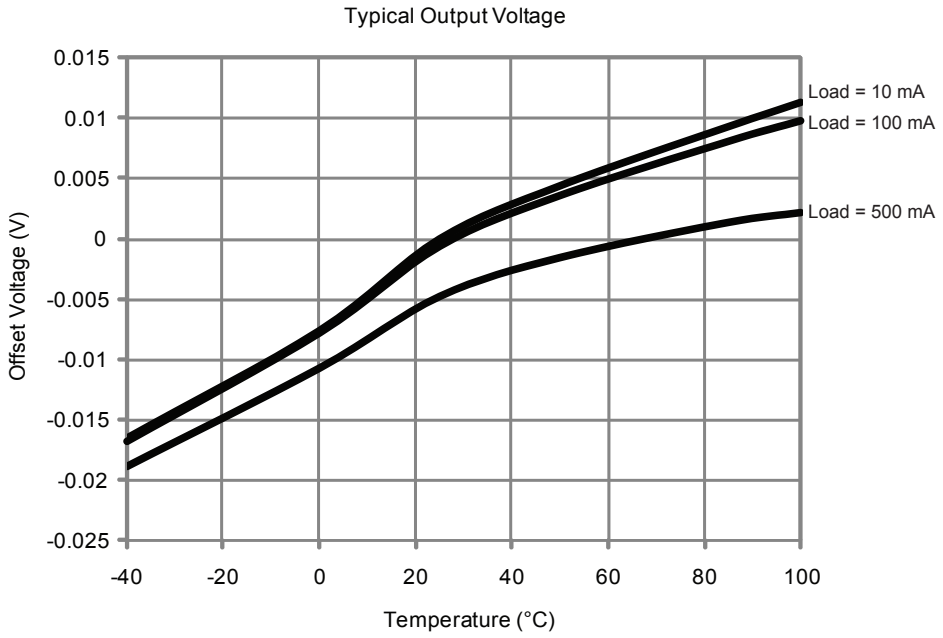

Figure 2-46 **• Typical Output Voltage**

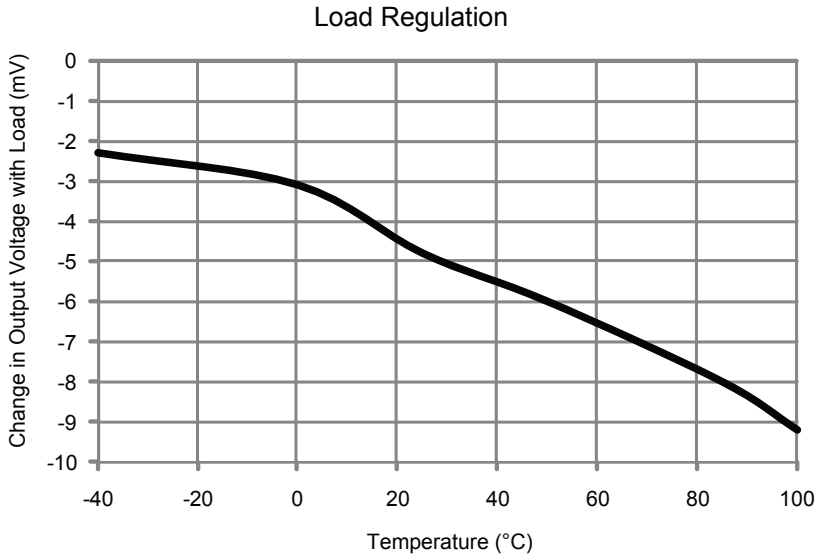

Figure 2-47 **• Load Regulation**

Serial Peripheral Interface (SPI) Characteristics

This section describes the DC and switching of the SPI interface. Unless otherwise noted, all output characteristics given for a 35 pF load on the pins and all sequential timing characteristics are related to SPI_x_CLK. For timing parameter definitions, refer to Figure 2-48 on page 2-90.

***Table 2-101* • SPI Characteristics**
Commercial Case Conditions: T_J = 85ºC, VDD = 1.425 V, –1 Speed Grade

Symbol	Description and Condition	A2F060	A2F200	A2F500	Unit
sp1	SPI_x_CLK minimum period				
	SPI_x_CLK = PCLK/2	20	NA	20	ns
	SPI_x_CLK = PCLK/4	40	40	40	ns
	SPI_x_CLK = PCLK/8	80	80	80	ns
	SPI_x_CLK = PCLK/16	0.16	0.16	0.16	µs
	SPI_x_CLK = PCLK/32	0.32	0.32	0.32	µs
	SPI_x_CLK = PCLK/64	0.64	0.64	0.64	µs
	SPI_x_CLK = PCLK/128	1.28	1.28	1.28	µs
	SPI_x_CLK = PCLK/256	2.56	2.56	2.56	µs
sp2	SPI_x_CLK minimum pulse width high				
	SPI_x_CLK = PCLK/2	10	NA	10	ns
	SPI_x_CLK = PCLK/4	20	20	20	ns
	SPI_x_CLK = PCLK/8	40	40	40	ns
	SPI_x_CLK = PCLK/16	0.08	0.08	0.08	µs
	SPI_x_CLK = PCLK/32	0.16	0.16	0.16	µs
	SPI_x_CLK = PCLK/64	0.32	0.32	0.32	µs
	SPI_x_CLK = PCLK/128	0.64	0.64	0.64	µs
	SPI_x_CLK = PCLK/256	1.28	1.28	1.28	us
sp3	SPI_x_CLK minimum pulse width low				
	SPI_x_CLK = PCLK/2	10	NA	10	ns
	SPI_x_CLK = PCLK/4	20	20	20	ns
	SPI_x_CLK = PCLK/8	40	40	40	ns
	SPI_x_CLK = PCLK/16	0.08	0.08	0.08	µs
	SPI_x_CLK = PCLK/32	0.16	0.16	0.16	µs
	SPI_x_CLK = PCLK/64	0.32	0.32	0.32	µs
	SPI_x_CLK = PCLK/128	0.64	0.64	0.64	µs
	SPI_x_CLK = PCLK/256	1.28	1.28	1.28	µs
sp4	SPI_x_CLK, SPI_x_DO, SPI_x_SS rise time (10%-90%) [1]	4.7	4.7	4.7	ns
sp5	SPI_x_CLK, SPI_x_DO, SPI_x_SS fall time (10%-90%) [1]	3.4	3.4	3.4	ns

Notes:

1. *These values are provided for a load of 35 pF. For board design considerations and detailed output buffer resistances, use the corresponding IBIS models located on the Microsemi SoC Products Group website: http://www.microsemi.com/soc/download/ibis/default.aspx.*
2. *For allowable pclk configurations, refer to the Serial Peripheral Interface Controller section in the SmartFusion Microcontroller Subsystem User's Guide.*

***Table 2-101* • SPI Characteristics**
Commercial Case Conditions: T_J = 85ºC, VDD = 1.425 V, –1 Speed Grade (continued)

Symbol	Description and Condition	A2F060	A2F200	A2F500	Unit
sp6	Data from master (SPI_x_DO) setup time [2]	1	1	1	pclk cycles
sp7	Data from master (SPI_x_DO) hold time [2]	1	1	1	pclk cycles
sp8	SPI_x_DI setup time [2]	1	1	1	pclk cycles
sp9	SPI_x_DI hold time [2]	1	1	1	pclk cycles

Notes:

1. *These values are provided for a load of 35 pF. For board design considerations and detailed output buffer resistances, use the corresponding IBIS models located on the Microsemi SoC Products Group website: http://www.microsemi.com/soc/download/ibis/default.aspx.*
2. *For allowable pclk configurations, refer to the Serial Peripheral Interface Controller section in the SmartFusion Microcontroller Subsystem User's Guide.*

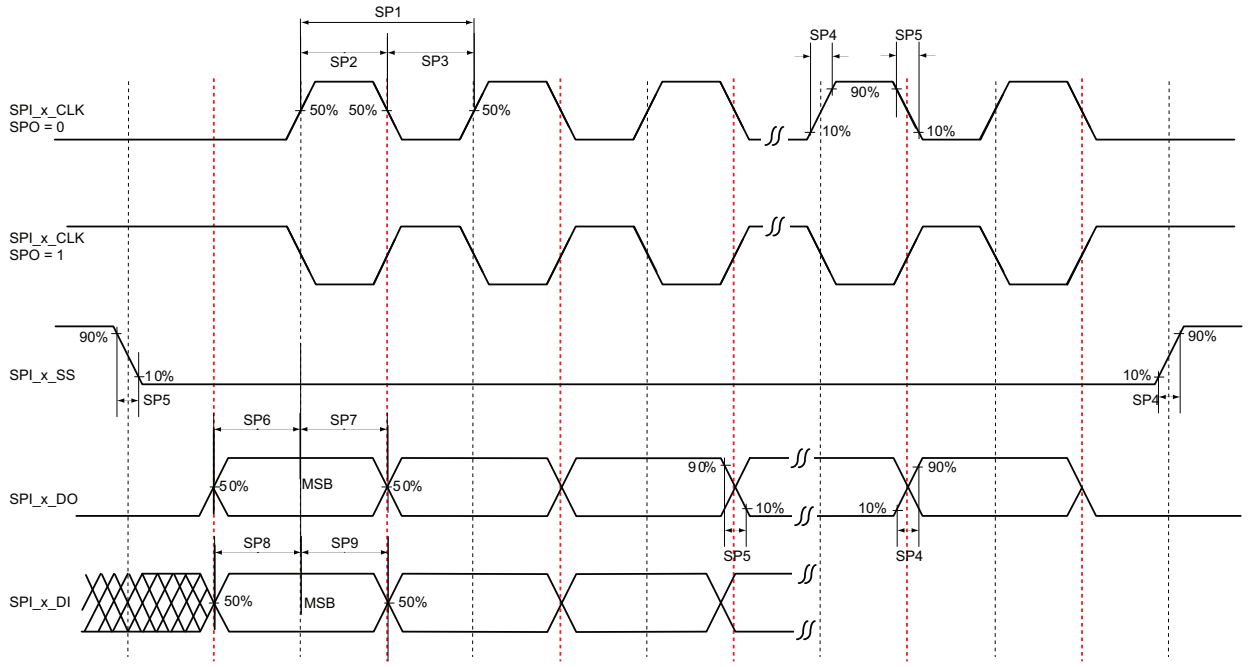

***Figure 2-48* • SPI Timing for a Single Frame Transfer in Motorola Mode (SPH = 1)**

Inter-Integrated Circuit (I^2C) Characteristics

This section describes the DC and switching of the I^2C interface. Unless otherwise noted, all output characteristics given are for a 100 pF load on the pins. For timing parameter definitions, refer to Figure 2-49 on page 2-92.

***Table 2-102* • I^2C Characteristics**
Commercial Case Conditions: T_J = 85ºC, V_{DD} = 1.425 V, –1 Speed Grade

Parameter	Definition	Condition	Value	Unit
V_{IL}	Minimum input low voltage	–	See Table 2-36 on page 2-30	–
	Maximum input low voltage	–	See Table 2-36	–
V_{IH}	Minimum input high voltage	–	See Table 2-36	–
	Maximum input high voltage	–	See Table 2-36	–
V_{OL}	Maximum output voltage low	I_{OL} = 8 mA	See Table 2-36	–
I_{IL}	Input current high	–	See Table 2-36	–
I_{IH}	Input current low	–	See Table 2-36	–
V_{hyst}	Hysteresis of Schmitt trigger inputs	–	See Table 2-33 on page 2-29	V
T_{FALL}	Fall time [2]	VIHmin to VILMax, C_{load} = 400 pF	15.0	ns
		VIHmin to VILMax, C_{load} = 100 pF	4.0	ns
T_{RISE}	Rise time [2]	VILMax to VIHmin, C_{load} = 400pF	19.5	ns
		VILMax to VIHmin, C_{load} = 100pF	5.2	ns
Cin	Pin capacitance	VIN = 0, f = 1.0 MHz	8.0	pF
$R_{pull\text{-}up}$	Output buffer maximum pull-down Resistance [1]	–	50	Ω
$R_{pull\text{-}down}$	Output buffer maximum pull-up Resistance [1]	–	150	Ω
D_{max}	Maximum data rate	Fast mode	400	Kbps
t_{LOW}	Low period of I2C_x_SCL [3]	–	1	pclk cycles
t_{HIGH}	High period of I2C_x_SCL [3]	–	1	pclk cycles
$t_{HD;STA}$	START hold time [3]	–	1	pclk cycles
$t_{SU;STA}$	START setup time [3]	–	1	pclk cycles
$t_{HD;DAT}$	DATA hold time [3]	–	1	pclk cycles
$t_{SU;DAT}$	DATA setup time [3]	–	1	pclk cycles

Notes:

1. *These maximum values are provided for information only. Minimum output buffer resistance values depend on VCCxxxxIOBx, drive strength selection, temperature, and process. For board design considerations and detailed output buffer resistances, use the corresponding IBIS models located on the SoC Products Group website at http://www.microsemi.com/soc/download/ibis/default.aspx.*
2. *These values are provided for a load of 100 pF and 400 pF. For board design considerations and detailed output buffer resistances, use the corresponding IBIS models located on the SoC Products Group website at http://www.microsemi.com/soc/download/ibis/default.aspx.*
3. *For allowable Pclk configurations, refer to the Inter-Integrated Circuit (I^2C) Peripherals section in the SmartFusion Microcontroller Subsystem User's Guide.*

***Table 2-102* • I²C Characteristics**
Commercial Case Conditions: T_J = 85ºC, V_{DD} = 1.425 V, –1 Speed Grade (continued)

Parameter	Definition	Condition	Value	Unit
$t_{SU;STO}$	STOP setup time [3]	–	1	pclk cycles
t_{FILT}	Maximum spike width filtered	–	50	ns

Notes:

1. *These maximum values are provided for information only. Minimum output buffer resistance values depend on VCCxxxxIOBx, drive strength selection, temperature, and process. For board design considerations and detailed output buffer resistances, use the corresponding IBIS models located on the SoC Products Group website at http://www.microsemi.com/soc/download/ibis/default.aspx.*
2. *These values are provided for a load of 100 pF and 400 pF. For board design considerations and detailed output buffer resistances, use the corresponding IBIS models located on the SoC Products Group website at http://www.microsemi.com/soc/download/ibis/default.aspx.*
3. *For allowable Pclk configurations, refer to the Inter-Integrated Circuit (I²C) Peripherals section in the SmartFusion Microcontroller Subsystem User's Guide.*

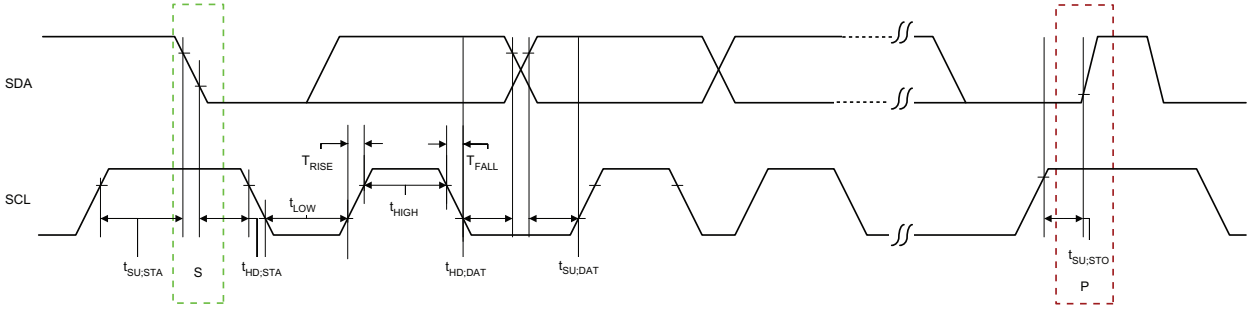

***Figure 2-49* • I2C Timing Parameter Definition**

3 – SmartFusion Development Tools

Designing with SmartFusion cSoCs involves three different types of design: FPGA design, embedded design and analog design. These roles can be filled by three different designers, two designers or even a single designer, depending on company structure and project complexity.

Types of Design Tools

Microsemi has developed design tools and flows to meet the needs of these three types of designers so they can work together smoothly on a single project (Figure 3-1).

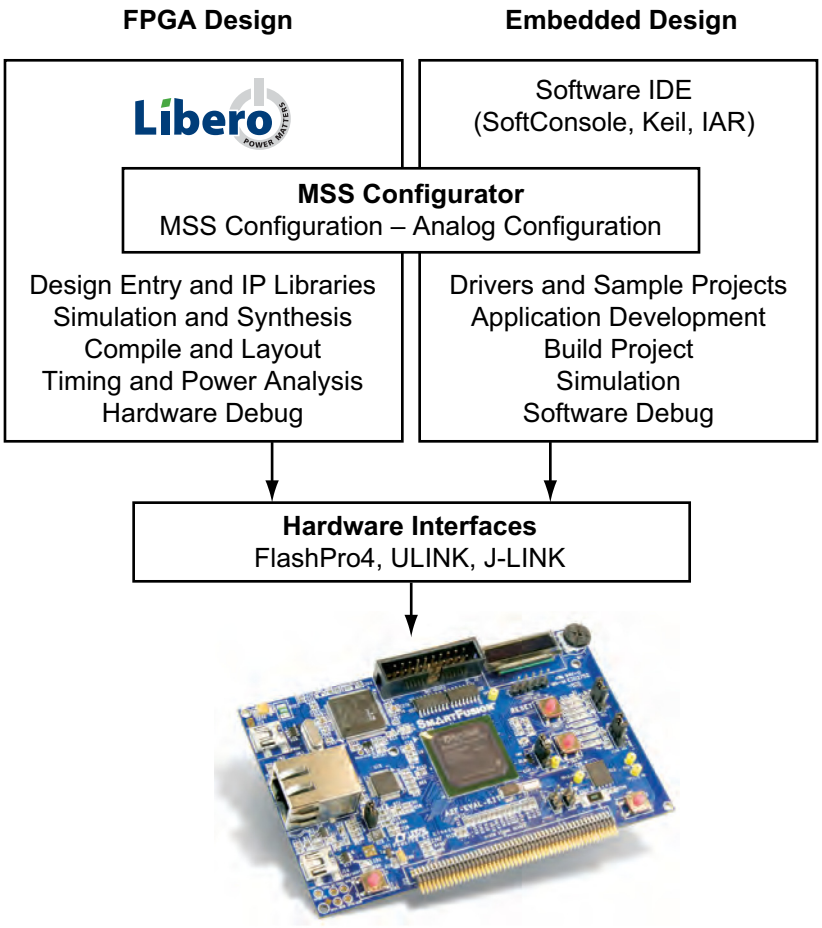

Figure 3-1 • **Three Design Roles**

FPGA Design

Libero System-on-Chip (SoC) software is Microsemi's comprehensive software toolset for designing with all Microsemi FPGAs and cSoCs. Libero SoC includes industry-leading synthesis, simulation and debug tools from Synopsys® and Mentor Graphics®, as well as innovative timing and power optimization and analysis.

Embedded Design

Microsemi offers FREE SoftConsole Eclipse based IDE, which includes the GNU C/C++ compiler and GDB debugger. Microsemi also offers evaluation versions of software from Keil and IAR, with full versions available from respective suppliers.

Analog Design

The MSS configurator provides graphical configuration for current, voltage and temperature monitors, sample sequencing setup and post-processing configuration, as well as DAC output.

The MSS configurator creates a bridge between the FPGA fabric and embedded designers so device configuration can be easily shared between multiple developers.

The MSS configurator includes the following:

- A simple configurator for the embedded designer to control the MSS peripherals and I/Os
- A method to import and view a hardware configuration from the FPGA flow into the embedded flow containing the memory map
- Automatic generation of drivers for any peripherals or soft IP used in the system configuration
- Comprehensive analog configuration for the programmable analog components
- Creation of a standard MSS block to be used in SmartDesign for connection of FPGA fabric designs and IP

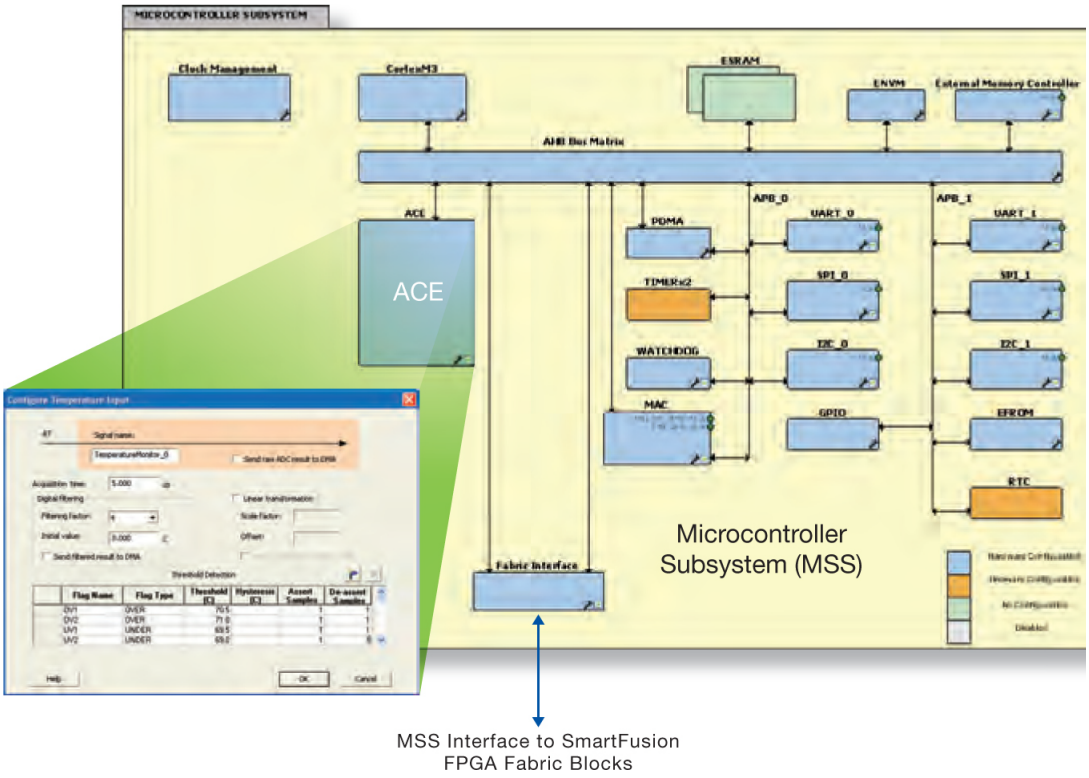

Figure 3-2 • **MSS Configurator**

SmartFusion Ecosystem

The Microsemi SoC Products Group has a long history of supplying comprehensive FPGA development tools and recognizes the benefit of partnering with industry leaders to deliver the optimum usability and productivity to customers. Taking the same approach with processor development, Microsemi has partnered with key industry leaders in the microcontroller space to provide the robust SmartFusion ecosystem.

Microsemi is partnering with Keil and IAR to provide Software IDE support to SmartFusion system designers. The result is a robust solution that can be easily adopted by developers who are already doing embedded design. The learning path is straightforward for FPGA designers.

Support for the SoC Products Group device and ecosystem resources is represented in Figure 3-3.

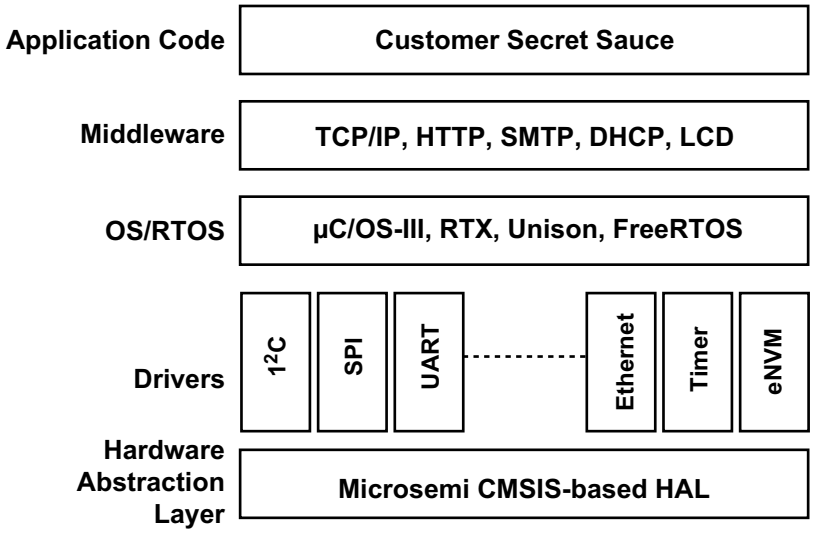

Figure 3-3 • **SmartFusion Ecosystem**

Figure 3-3 shows the SmartFusion stack with examples of drivers, RTOS, and middleware from Microsemi and partners. By leveraging the SmartFusion stack, designers can decide at which level to add their own customization to their design, thus speeding time to market and reducing overhead in the design.

ARM

Because an ARM processor was chosen for SmartFusion cSoCs, Microsemi's customers can benefit from the extensive ARM ecosystem. By building on Microsemi supplied hardware abstraction layer (HAL) and drivers, third party vendors can easily port RTOS and middleware for the SmartFusion cSoC.

- ARM Cortex-M Series Processors
- ARM Cortex-M3 Processor Resource
- ARM Cortex-M3 Technical Reference Manual
- *ARM Cortex-M3 Processor Software Development for ARM7TDMI Processor Programmers* White Paper

Compile and Debug

Microsemi's SoftConsole is a free Eclipse-based IDE that enables the rapid production of C and C++ executables for Microsemi FPGA and cSoCs using Cortex-M3, Cortex-M1 and Core8051s. For SmartFusion support, SoftConsole includes the GNU C/C++ compiler and GDB debugger. Additional examples can be found on the SoftConsole page:

- Using UART with SmartFusion: SoftConsole Standalone Flow Tutorial
  - Design Files
- Displaying POT Level with LEDs: Libero SoC and SoftConsole Flow Tutorial for SmartFusion
  - Design Files

IAR Embedded Workbench® for ARM/Cortex is an integrated development environment for building and debugging embedded ARM applications using assembler, C and C++. It includes a project manager, editor, build and debugger tools with support for RTOS-aware debugging on hardware or in a simulator.

- Designing SmartFusion cSoC with IAR Systems
- IAR Embedded Workbench IDE User Guide for ARM
- Download Evaluation or Kickstart version of IAR Embedded Workbench for ARM

Keil's Microcontroller Development Kit comes in two editions: MDK-ARM and MDK Basic. Both editions feature µVision®, the ARM Compiler, MicroLib, and RTX, but the MDK Basic edition is limited to 256K so that small applications are more affordable.

- Designing SmartFusion cSoC with Keil
- Using Keil µVision and Microsemi SmartFusion cSoC
  - Programming file for use with this tutorial
- Keil Microcontroller Development Kit for ARM Product Manuals
- Download Evaluation version of Keil MDK-ARM

Software IDE	**SoftConsole**	**Vision IDE**	**Embedded Workbench**
Website	www.microsemi.com/soc	www.keil.com	www.iar.com
Free versions from SoC Products Group	Free with Libero SoC	32 K code limited	32 K code limited
Available from Vendor	N/A	Full version	Full version
Compiler	GNU GCC	RealView C/C++	IAR ARM Compiler
Debugger	GDB debug	Vision Debugger	C-SPY Debugger
Instruction Set Simulator	No	Vision Simulator	Yes
Debug Hardware	FlashPro4	ULINK2 or ULINK-ME	J-LINK or J-LINK Lite

Operating Systems

FreeRTOS™ is a portable, open source, royalty free, mini real-time kernel (a free-to-download and free-to-deploy RTOS that can be used in commercial applications without any requirement to expose your proprietary source code). FreeRTOS is scalable and designed specifically for small embedded systems. This FreeRTOS version ported by Microsemi is 6.0.1. For more information, visit the FreeRTOS website: www.freertos.org

- SmartFusion Webserver Demo Using uIP and FreeRTOS
- SmartFusion cSoC: Running Webserver, TFTP on lwIP TCP/IP Stack Application Note

Emcraft Systems provides porting of the open-source U-boot firmware and uClinux™ kernel to the SmartFusion cSoC, a Linux®-based cross-development framework, and other complementary components. Combined with the release of its A2F-Linux Evaluation Kit, this provides a low-cost platform for evaluation and development of Linux (uClinux) on the Cortex-M3 CPU core of the Microsemi SmartFusion cSoC.

- Emcraft Linux on Microsemi's SmartFusion cSoC

Keil offers the RTX Real-Time Kernel as a royalty-free, deterministic RTOS designed for ARM and Cortex-M devices. It allows you to create programs that simultaneously perform multiple functions and helps to create applications which are better structured and more easily maintained.

- The RTX Real-Time Kernel is included with MDK-ARM. Download the Evaluation version of Keil MDK-ARM.
- RTX source code is available as part of Keil/ARM Real-Time Library (RL-ARM), a group of tightly-coupled libraries designed to solve the real-time and communication challenges of embedded systems based on ARM-powered microcontroller devices. The RL-ARM library now supports SmartFusion cSoCs and designers with additional key features listed in the "Middleware" section on page 3-5.

Micrium supports SmartFusion cSoCs with the company's flagship µC/OS family, recognized for a variety of features and benefits, including unparalleled reliability, performance, dependability, impeccable source code and vast documentation. Micrium supports the following products for SmartFusion cSoCs and continues to work with Microsemi on additional projects.

- SmartFusion Quickstart Guide for Micrium µC/OS-III Examples
  - Design Files

µC/OS-III™, Micrium's newest RTOS, is designed to save time on your next embedded project and puts greater control of the software in your hands.

RoweBots provides an ultra tiny Linux-compatible RTOS called Unison for SmartFusion. Unison consists of a set of modular software components, which, like Linux, are either free or commercially licensed. Unison offers POSIX® and Linux compatibility with hard real-time performance, complete I/O modules and an easily understood environment for device driver programming. Seamless integration with FPGA and analog features are fast and easy.

- Unison V4-based products include a free Unison V4 Linux and POSIX-compatible kernel with serial I/O, file system, six demonstration programs, upgraded documentation and source code for Unison V4, and free (for non-commercial use) Unison V4 TCP/IP server. Commercial license upgrade is available for Unison V4 TCP/IP server with three demonstration programs, DHCP client and source code.
- Unison V5-based products include commercial Unison V5 Linux- and POSIX-compatible kernel with serial I/O, file system, extensive feature set, full documentation, source code and more than 20 demonstration programs, Unison V5 TCP/IPv4 with extended feature set, sockets interface, multiple network interfaces, PPP support, DHCP client, documentation, source code and six demonstration programs, and multiple other features.

Middleware

Microsemi has ported both uIP and lwIP for Ethernet support as well as including TFTP file service.

- SmartFusion Webserver Demo Using uIP and FreeRTOS
- SmartFusion: Running Webserver, TFTP on lwIP TCP/IP Stack Application Note

The Keil/ARM Real-Time Library (RL-ARM)[1], in addition to RTX source, includes the following:

- RL-TCPnet (TCP/IP) – The Keil RL-TCPnet library, supporting full TCP/IP and UDP protocols, is a full networking suite specifically written for small ARM and Cortex-M processor-based microcontrollers. TCPnet is now ported to and supports SmartFusion Cortex-M3. It is highly optimized, has a small code footprint, and gives excellent performance, providing a wide range of application level protocols and examples such as FTP, SNMP, SOAP and AJAX. An HTTP server example of TCPnet working in a SmartFusion design is available.

1. *The CAN and USB functions within RL-ARM are not supported for SmartFusion cSoC.*

- Flash File System (RL-Flash) allows your embedded applications to create, save, read, and modify files in standard storage devices such as ROM, RAM, or FlashROM, using a standard serial peripheral interface (SPI). Many ARM-based microcontrollers have a practical requirement for a standard file system. With RL-FlashFS you can implement new features in embedded applications such as data logging, storing program state during standby modes, or storing firmware upgrades.

Micrium, in addition to µC/OS-III®, offers the following support for SmartFusion cSoC:

- µC/TCP-IP™ is a compact, reliable, and high-performance stack built from the ground up by Micrium and has the quality, scalability, and reliability that translates into a rapid configuration of network options, remarkable ease-of-use, and rapid time-to-market.
- µC/Probe™ is one of the most useful tools in embedded systems design and puts you in the driver's seat, allowing you to take charge of virtually any variable, memory location, and I/O port in your embedded product, while your system is running.

References

PCB Files

A2F500 SmartFusion Development Kit PCB Files

www.microsemi.com/soc/download/rsc/?f=A2F500_DEV_KIT_BF

A2F200 SmartFusion Development Kit PCB Files

www.microsemi.com/soc/download/rsc/?f=A2F_DEV_KIT_BF

Application Notes

SmartFusion cSoC Board Design Guidelines

www.microsemi.com/soc/documents/A2F_AC359_AN.pdf

4 – SmartFusion Programming

SmartFusion cSoCs have three separate flash areas that can be programmed:

1. The FPGA fabric
2. The embedded nonvolatile memories (eNVMs)
3. The embedded flash ROM (eFROM)

There are essentially three methodologies for programming these areas:

1. In-system programming (ISP)
2. In-application programming (IAP)
   a. A2F060 and A2F500: The FPGA fabric, eNVM, and eFROM
   b. A2F200: Only the FPGA fabric and the eNVM
3. Pre-programming (non-ISP)

Programming, whether ISP or IAP methodologies are employed, can be done in two ways:

1. Securely using the on chip AES decryption logic
2. In plain text

In-System Programming

In-System Programming is performed with the aid of external JTAG programming hardware. Table 4-1 describes the JTAG programming hardware that will program a SmartFusion cSoC and Table 4-2 defines the JTAG pins that provide the interface for the programming hardware.

***Table 4-1* • Supported JTAG Programming Hardware**

Dongle	Source	JTAG	SWD[1]	SWV[2]	Program FPGA	Program eFROM	Program eNVM
FlashPro3/4	SoC Products Group	Yes	No	No	Yes	Yes	Yes
ULINK Pro	Keil	Yes	Yes	Yes	Yes[3]	Yes[3]	Yes
ULINK2	Keil	Yes	Yes	Yes	Yes[3]	Yes[3]	Yes
IAR J-Link	IAR	Yes	Yes	Yes	Yes[3]	Yes[3]	Yes

Notes:

1. *SWD = ARM Serial Wire Debug*
2. *SWV = ARM Serial Wire Viewer*
3. *Planned support*

***Table 4-2* • JTAG Pin Descriptions**

Pin Name	Description
JTAGSEL	ARM Cortex-M3 or FPGA test access port (TAP) controller selection
TRSTB	Test reset bar
TCK	Test clock
TMS	Test mode select
TDI	Test data input
TDO	Test data output

The JTAGSEL pin selects the FPGA TAP controller or the Cortex-M3 debug logic. When JTAGSEL is asserted, the FPGA TAP controller is selected and the TRSTB input into the Cortex-M3 is held in a reset state (logic 0), as depicted in Figure 4-1. Users should tie the JTAGSEL pin high externally.

Microsemi's free Eclipse-based IDE, SoftConsole, has the ability to control the JTAGSEL pin directly with the FlashPro4 programmer. Manual jumpers are provided on the evaluation and development kits to allow manual selection of this function for the J-Link and ULINK debuggers.

Note: Standard ARM JTAG connectors do not have access to the JTAGSEL pin. SoftConsole automatically selects the appropriate TAP controller using the CTXSELECT JTAG command. When using SoftConsole, the state of JTAGSEL is a "don't care."

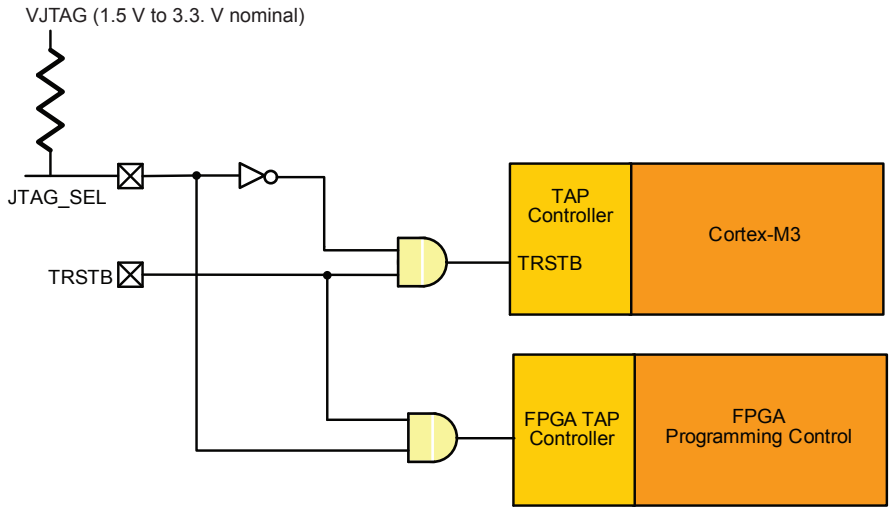

Figure 4-1 • **TRSTB Logic**

In-Application Programming

In-application programming refers to the ability to reprogram the various flash areas under direct supervision of the Cortex-M3.

Reprogramming the FPGA Fabric Using the Cortex-M3

In this mode, the Cortex-M3 is executing the programming algorithm on-chip. The IAP driver can be incorporated into the design project and executed from eNVM or eSRAM. The SoC Products Group provides working example projects for SoftConsole, IAR, and Keil development environments. These can be downloaded via the SoC Products Group Firmware Catalog. The new bitstream to be programmed into the FPGA can reside on the user's printed circuit board (PCB) in a separate SPI flash memory. Alternately, the user can modify the existing projects supplied by the SoC Products Group and, via custom handshaking software, throttle the download of the new image and program the FPGA a piece at a time in real time. A cost-effective and reliable approach would be to store the bitstream in an external SPI flash. Another option is storing a redundant bitstream image in an external SPI flash and loading the newest version into the FPGA only when receiving an IAP command. Since the FPGA I/Os are tristated or held at predefined or last known state during FPGA programming, the user must use MSS I/Os to interface to external memories. Since there are two SPI controllers in the MSS, the user can dedicate one to an SPI flash and the other to the particulars of an application. The amount of flash memory required to program the FPGA always exceeds the size of the eNVM block that is on-chip. The external memory controller (EMC) cannot be used as an interface to a memory device for storage of a bitstream because its I/O pads are FPGA I/Os; hence they are tristated when the FPGA is in a programming state.

The MSS resets itself after IAP of the FPGA fabric. This reset is internally asserted on MSS_RESETN by the power supply monitor (PSM) and reset controller of the MSS.

Re-Programming the eNVM Blocks Using the Cortex-M3

In this mode the Cortex-M3 is executing the eNVM programming algorithm from eSRAM. Since individual pages (132 bytes) of the eNVM can be write-protected, the programming algorithm software can be protected from inadvertent erasure. When reprogramming the eNVM, both MSS I/Os and FPGA I/Os are available as interfaces for sourcing the new eNVM image. The SoC Products Group provides working example projects for SoftConsole, IAR, and Keil development environments. These can be downloaded via the SoC Products Group Firmware Catalog.

Alternately, the eNVM can be reprogrammed by the Cortex-M3 via the IAP driver. This is necessary when using an encrypted image.

Secure Programming

For background, refer to the "Security in Low Power Flash Devices" chapter of the *Fusion FPGA Fabric User's Guide* on the SoC Products Group website. SmartFusion ISP behaves identically to Fusion ISP. IAP of SmartFusion cSoCs is accomplished by using the IAP driver. Only the FPGA fabric and the eNVM can be reprogrammed with the protection of security measures by using the IAP driver.

Typical Programming and Erase Times

Table 4-3 documents the typical programming and erase times for two components of SmartFusion cSoCs, FPGA fabric and eNVM, using the SoC Products Group's FlashPro hardware and software. These times will be different for other ISP and IAP methods. The **Program** action in FlashPro software includes erase, program, and verify to complete.

The typical programming (including erase) time per page of the eNVM is 8 ms.

***Table 4-3* • Typical Programming and Erase Times**

	FPGA Fabric (seconds)		eNVM (seconds)	
	A2F200	**A2F500**	**A2F200**	**A2F500**
Erase	21	21	N/A	N/A
Program	8	15	18	26
Verify	9	16	26	42

References

User's Guides

DirectC User's Guide

www.microsemi.com/soc/documents/DirectC_UG.pdf

In-System Programming (ISP) of Microsemi's Low-Power Flash Devices Using FlashPro4/3/3X

www.microsemi.com/soc/documents/LPF_AC386_AN.pdf

Programming Flash Devices HandBook

www.microsemi.com/soc/documents/Flash_Program_HBs.pdf

Application Notes on IAP Programming Technique

SmartFusion cSoC: Programming FPGA Fabric and eNVM Using In-Application Programming Interface App Note

www.microsemi.com/soc/documents/A2F_AC362_AN.pdf

SmartFusion cSoC: Basic Bootloader and Field Upgrade eNVM Through IAP Interface App Note

www.microsemi.com/soc/documents/A2F_AC372_AN.pdf

5 – Pin Descriptions

Supply Pins

Name	Type	Description
GND	Ground	Digital ground to the FPGA fabric, microcontroller subsystem and GPIOs
GND15ADC0	Ground	Quiet analog ground to the 1.5 V circuitry of the first analog-to-digital converter (ADC)
GND15ADC1	Ground	Quiet analog ground to the 1.5 V circuitry of the second ADC
GND15ADC2	Ground	Quite analog ground to the 1.5 V circuitry of the third ADC
GND33ADC0	Ground	Quiet analog ground to the 3.3 V circuitry of the first ADC
GND33ADC1	Ground	Quiet analog ground to the 3.3 V circuitry of the second ADC
GND33ADC2	Ground	Quiet analog ground to the 3.3 V circuitry of the third ADC
GNDA	Ground	Quiet analog ground to the analog front-end
GNDAQ	Ground	Quiet analog ground to the analog I/O of SmartFusion cSoCs
GNDENVM	Ground	Digital ground to the embedded nonvolatile memory (eNVM)
GNDLPXTAL	Ground	Analog ground to the low power 32 KHz crystal oscillator circuitry
GNDMAINXTAL	Ground	Analog ground to the main crystal oscillator circuitry
GNDQ	Ground	Quiet digital ground supply voltage to input buffers of I/O banks. Within the package, the GNDQ plane is decoupled from the simultaneous switching noise originated from the output buffer ground domain. This minimizes the noise transfer within the package and improves input signal integrity. GNDQ needs to always be connected on the board to GND.
GNDRCOSC	Ground	Analog ground to the integrated RC oscillator circuit
GNDSDD0	Ground	Analog ground to the first sigma-delta DAC
GNDSDD1	Ground	Common analog ground to the second and third sigma-delta DACs
GNDTM0	Ground	Analog temperature monitor common ground for signal conditioning blocks SCB 0 and SCB 1 (see information for pins "TM0" and "TM1" in the "Analog Front-End (AFE)" section on page 5-14).
GNDTM1	Ground	Analog temperature monitor common ground for signal conditioning block SCB 2 and SBCB 3 (see information for pins "TM2" and "TM3" in the "Analog Front-End (AFE)" section on page 5-14).
GNDTM2	Ground	Analog temperature monitor common ground for signal conditioning block SCB4
GNDVAREF	Ground	Analog ground reference used by the ADC. This pad should be connected to a quiet analog ground.
VCC	Supply	Digital supply to the FPGA fabric and MSS, nominally 1.5 V. VCC is also required for powering the JTAG state machine, in addition to VJTAG. Even when a SmartFusion cSoC is in bypass mode in a JTAG chain of interconnected devices, both VCC and VJTAG must remain powered to allow JTAG signals to pass through the SmartFusion cSoC.

Notes:

1. *The following 3.3 V supplies should be connected together while following proper noise filtering practices: VCC33A, VCC33ADCx, VCC33AP, VCC33SDDx, VCCMAINXTAL, and VCCLPXTAL.*
2. *The following 1.5 V supplies should be connected together while following proper noise filtering practices: VCC, VCC15A, and VCC15ADCx.*
3. *For more details on VCCPLLx capacitor recommendations, refer to the application note AC359, SmartFusion cSoC Board Design Guidelines, the "PLL Power Supply Decoupling Scheme" section.*

Name	Type	Description
VCC15A	Supply	Clean analog 1.5 V supply to the analog circuitry. Always power this pin.
VCC15ADC0	Supply	Analog 1.5 V supply to the first ADC. Always power this pin.
VCC15ADC1	Supply	Analog 1.5 V supply to the second ADC. Always power this pin.
VCC15ADC2	Supply	Analog 1.5 V supply to the third ADC. Always power this pin.
VCC33A	Supply	Clean 3.3 V analog supply to the analog circuitry. VCC33A is also used to feed the 1.5 V voltage regulator for designs that do not provide an external supply to VCC. Refer to the Voltage Regulator (VR), Power Supply Monitor (PSM), and Power Modes section in the *SmartFusion Microcontroller Subsystem User's Guide* for more information.
VCC33ADC0	Supply	Analog 3.3 V supply to the first ADC. If unused, Microsemi recommends connecting this pin to a 3.3 V supply.[1]
VCC33ADC1	Supply	Analog 3.3 V supply to the second ADC. If unused, Microsemi recommends connecting this pin to a 3.3 V supply.[1]
VCC33ADC2	Supply	Analog 3.3 V supply to the third ADC. If unused, Microsemi recommends connecting this pin to a 3.3 V supply.[1]
VCC33AP	Supply	Analog clean 3.3 V supply to the charge pump. To avoid high current draw, VCC33AP should be powered up simultaneously with or after VCC33A. Can be pulled down if unused.[1]
VCC33N	Supply	–3.3 V output from the voltage converter. A 2.2 µF capacitor must be connected from this pin to GND. Analog charge pump capacitors are not needed if none of the analog SCB features are used and none of the SDDs are used. In that case it should be left unconnected.
VCC33SDD0	Supply	Analog 3.3 V supply to the first sigma-delta DAC
VCC33SDD1	Supply	Common analog 3.3 V supply to the second and third sigma-delta DACs
VCCENVM	Supply	Digital 1.5 V power supply to the embedded nonvolatile memory blocks. To avoid high current draw, VCC should be powered up before or simultaneously with VCCENVM.
VCCESRAM	Supply	Digital 1.5 V power supply to the embedded SRAM blocks. Available only on the 208PQFP package. It should be connected to VCC (in other packages, it is internally connected to VCC).
VCCFPGAIOB0	Supply	Digital supply to the FPGA fabric I/O bank 0 (north FPGA I/O bank) for the output buffers and I/O logic. Each bank can have a separate VCCFPGAIO connection. All I/Os in a bank will run off the same VCCFPGAIO supply. VCCFPGAIO can be 1.5 V, 1.8 V, 2.5 V, or 3.3 V, nominal voltage. Unused I/O banks should have their corresponding VCCFPGAIO pins tied to GND.
VCCFPGAIOB1	Supply	Digital supply to the FPGA fabric I/O bank 1 (east FPGA I/O bank) for the output buffers and I/O logic. Each bank can have a separate VCCFPGAIO connection. All I/Os in a bank will run off the same VCCFPGAIO supply. VCCFPGAIO can be 1.5 V, 1.8 V, 2.5 V, or 3.3 V, nominal voltage. Unused I/O banks should have their corresponding VCCFPGAIO pins tied to GND.

Notes:

1. *The following 3.3 V supplies should be connected together while following proper noise filtering practices: VCC33A, VCC33ADCx, VCC33AP, VCC33SDDx, VCCMAINXTAL, and VCCLPXTAL.*
2. *The following 1.5 V supplies should be connected together while following proper noise filtering practices: VCC, VCC15A, and VCC15ADCx.*
3. *For more details on VCCPLLx capacitor recommendations, refer to the application note AC359, SmartFusion cSoC Board Design Guidelines, the "PLL Power Supply Decoupling Scheme" section.*

Name	Type	Description
VCCFPGAIOB5	Supply	Digital supply to the FPGA fabric I/O bank 5 (west FPGA I/O bank) for the output buffers and I/O logic. Each bank can have a separate VCCFPGAIO connection. All I/Os in a bank will run off the same VCCFPGAIO supply. VCCFPGAIO can be 1.5 V, 1.8 V, 2.5 V, or 3.3 V, nominal voltage. Unused I/O banks should have their corresponding VCCFPGAIO pins tied to GND.
VCCLPXTAL	Supply	Analog supply to the low power 32 KHz crystal oscillator. Always power this pin.[1]
VCCMAINXTAL	Supply	Analog supply to the main crystal oscillator circuit. Always power this pin.[1]
VCCMSSIOB2	Supply	Supply voltage to the microcontroller subsystem I/O bank 2 (east MSS I/O bank) for the output buffers and I/O logic. Each bank can have a separate VCCMSSIO connection. All I/Os in a bank will run off the same VCCMSSIO supply. VCCMSSIO can be 1.5 V, 1.8 V, 2.5 V, or 3.3 V, nominal voltage. Unused I/O banks should have their corresponding VCCMSSIO pins tied to GND.
VCCMSSIOB4	Supply	Supply voltage to the microcontroller subsystem I/O bank 4 (west MSS I/O bank) for the output buffers and I/O logic. Each bank can have a separate VCCMSSIO connection. All I/Os in a bank will run off the same VCCMSSIO supply. VCCMSSIO can be 1.5 V, 1.8 V, 2.5 V, or 3.3 V, nominal voltage. Unused I/O banks should have their corresponding VCCMSSIO pins tied to GND.
VCCPLLx	Supply	Analog 1.5 V supply to the PLL. Always power this pin.
VCCRCOSC	Supply	Analog supply to the integrated RC oscillator circuit. Always power this pin.[1]
VCOMPLAx	Supply	Analog ground for the PLL
VDDBAT	Supply	External battery connection to the low power 32 KHz crystal oscillator (along with VCCLPXTAL), RTC, and battery switchover circuit. Can be pulled down if unused.

Notes:

1. *The following 3.3 V supplies should be connected together while following proper noise filtering practices: VCC33A, VCC33ADCx, VCC33AP, VCC33SDDx, VCCMAINXTAL, and VCCLPXTAL.*
2. *The following 1.5 V supplies should be connected together while following proper noise filtering practices: VCC, VCC15A, and VCC15ADCx.*
3. *For more details on VCCPLLx capacitor recommendations, refer to the application note AC359, SmartFusion cSoC Board Design Guidelines, the "PLL Power Supply Decoupling Scheme" section.*

Name	Type	Description
VJTAG	Supply	Digital supply to the JTAG controller SmartFusion cSoCs have a separate bank for the dedicated JTAG pins. The JTAG pins can be run at any voltage from 1.5 V to 3.3 V (nominal). Isolating the JTAG power supply in a separate I/O bank gives greater flexibility in supply selection and simplifies power supply and PCB design. If the JTAG interface is neither used nor planned to be used, the V_{JTAG} pin together with the TRSTB pin could be tied to GND. Note that VCC is required to be powered for JTAG operation; VJTAG alone is insufficient. If a SmartFusion cSoC is in a JTAG chain of interconnected boards and it is desired to power down the board containing the device, this can be done provided both VJTAG and VCC to the device remain powered; otherwise, JTAG signals will not be able to transition the device, even in bypass mode. See "JTAG Pins" section on page 5-10.
VPP	Supply	Digital programming circuitry supply SmartFusion cSoCs support single-voltage in-system programming (ISP) of the configuration flash, embedded FlashROM (eFROM), and embedded nonvolatile memory (eNVM). For programming, VPP should be in the 3.3 V ± 5% range. During normal device operation, VPP can be left floating or can be tied to any voltage between 0 V and 3.6 V. When the VPP pin is tied to ground, it shuts off the charge pump circuitry, resulting in no sources of oscillation from the charge pump circuitry. For proper programming, 0.01µF, and 0.1µF to 1µF capacitors, (both rated at 16 V) are to be connected in parallel across VPP and GND, and positioned as close to the FPGA pins as possible.

Notes:

1. *The following 3.3 V supplies should be connected together while following proper noise filtering practices: VCC33A, VCC33ADCx, VCC33AP, VCC33SDDx, VCCMAINXTAL, and VCCLPXTAL.*
2. *The following 1.5 V supplies should be connected together while following proper noise filtering practices: VCC, VCC15A, and VCC15ADCx.*
3. *For more details on VCCPLLx capacitor recommendations, refer to the application note AC359, SmartFusion cSoC Board Design Guidelines, the "PLL Power Supply Decoupling Scheme" section.*

User-Defined Supply Pins

Name	Type	Polarity/ Bus Size	Description
VAREF0	Input	1	Analog reference voltage for first ADC The SmartFusion cSoC can be configured to generate a 2.56 V internal reference that can be used by the ADC. While using the internal reference, the reference voltage is output on the VAREFOUT pin for use as a system reference. If a different reference voltage is required, it can be supplied by an external source and applied to this pin. The valid range of values that can be supplied to the ADC is 1.0 V to 3.3 V. When VAREF0 is internally generated, a bypass capacitor must be connected from this pin to ground. The value of the bypass capacitor should be between 3.3 µF and 22 µF, which is based on the needs of the individual designs. The choice of the capacitor value has an impact on the settling time it takes the VAREF0 signal to reach the required specification of 2.56 V to initiate valid conversions by the ADC. If the lower capacitor value is chosen, the settling time required for VAREF0 to achieve 2.56 V will be shorter than when selecting the larger capacitor value. The above range of capacitor values supports the accuracy specification of the ADC, which is detailed in the datasheet. Designers choosing the smaller capacitor value will not obtain as much margin in the accuracy as that achieved with a larger capacitor value. See the Analog-to-Digital Converter (ADC) section in the *SmartFusion Programmable Analog User's Guide* for more information. The SoC Products Group recommends customers use 10 µF as the value of the bypass capacitor. Designers choosing to use an external VAREF0 need to ensure that a stable and clean VAREF0 source is supplied to the VAREF0 pin before initiating conversions by the ADC. To use the internal voltage reference, you must connect the VAREFOUT pin to the appropriate ADC VAREFx input—either the VAREF0 or VAREF1 pin—on the PCB.
VAREF1	Input	1	Analog reference voltage for second ADC See "VAREF0" above for more information.
VAREF2	Input	1	Analog reference voltage for third ADC See "VAREF0" above for more.
VAREFOUT	Out	1	Internal 2.56 V voltage reference output. Can be used to provide the two ADCs with a unique voltage reference externally by connecting VAREFOUT to both VAREF0 and VAREF1. To use the internal voltage reference, you must connect the VAREFOUT pin to the appropriate ADC VAREFx input—either the VAREF0 or VAREF1 pin—on the PCB.

Global I/O Naming Conventions

Gmn (Gxxx) refers to Global I/Os. These Global I/Os are used to connect the input to global networks. Global networks have high fanout and low skew. The naming convention for Global I/Os is as follows:

G = Global

m = Global pin location associated with each CCC on the device:

- A (northwest corner)
- B (northeast corner)
- C (east middle)
- D (southeast corner)
- E (southwest corner)
- F (west middle)

n = Global input MUX and pin number of the associated Global location m—A0, A1, A2, B0, B1, B2, C0, C1, or C2.

Global (GL) I/Os have access to certain clock conditioning circuitry (and the PLL) and/or have direct access to the global network (spines). Additionally, the global I/Os can be used as regular I/Os, since they have identical capabilities.

Unused GL pins are configured as inputs with pull-up resistors. See more detailed descriptions of global I/O connectivity in the clocking resources chapter of the *SmartFusion FPGA Fabric User's Guide* and the clock conditioning circuitry chapter of the *SmartFusion Microcontroller Subsystem User's Guide*.

All inputs labeled GC/GF are direct inputs into the quadrant clocks. The inputs to the global network are multiplexed, and only one input can be used as a global input. For example, if GAA0 is used as a quadrant global input, GAA1 and GAA2 are no longer available for input to the quadrant globals. All inputs labeled GC/GF are direct inputs into the chip-level globals, and the rest are connected to the quadrant globals.

User Pins

Name	Type	Polarity/Bus Size	Description
GPIO_x	In/out	32	Microcontroller Subsystem (MSS) General Purpose I/O (GPIO). The MSS GPIO pin functions as an input, output, tristate, or bidirectional buffer with configurable interrupt generation and Schmitt trigger support. Input and output signal levels are compatible with the I/O standard selected. Unused GPIO pins are tristated and do not include pull-up or pull-down resistors. During power-up, the used GPIO pins are tristated with no pull-up or pull-down resistors until Sys boot configures them. Some of these pins are also multiplexed with integrated peripherals in the MSS (SPI, I^2C, and UART). These pins are located in Bank-2 (GPIO_16 to GPIO_31) for A2F060, A2F200, and A2F500 devices. GPIOs can be routed to dedicated I/O buffers (MSSIOBUF) or in some cases to the FPGA fabric interface through an IOMUX. This allows GPIO pins to be multiplexed as either I/Os for the FPGA fabric, the ARM® Cortex-M3 or for given integrated MSS peripherals. The MSS peripherals are not multiplexed with each other; they are multiplexed only with the GPIO block. For more information, see the General Purpose I/O Block (GPIO) section in the *SmartFusion Microcontroller Subsystem User's Guide*.
IO	In/out		FPGA user I/O

User I/O Naming Conventions

The naming convention used for each FPGA user I/O is Gmn/IOuxwByVz, where:

Gmn is only used for I/Os that also have CCC access—i.e., global pins. Refer to the "Global I/O Naming Conventions" section on page 5-6.

u = I/O pair number in bank, starting at 00 from the northwest I/O bank and proceeding in a clockwise direction.

x = P (positive) or N (negative) or S (single-ended) or R (regular, single-ended).

w = D (Differential Pair), P (Pair), or S (Single-Ended). D (Differential Pair) if both members of the pair are bonded out to adjacent pins or are separated only by one GND or NC pin; P (Pair) if both members of the pair are bonded out but do not meet the adjacency requirement; or S (Single-Ended) if the I/O pair is not bonded out. For Differential Pairs (D), adjacency for ball grid packages means only vertical or horizontal. Diagonal adjacency does not meet the requirements for a true differential pair.

B = Bank

y = Bank number starting at 0 from northwest I/O bank and incrementing clockwise.

V = Reference voltage

z = VREF mini bank number.

The FPGA user I/O pin functions as an input, output, tristate or bidirectional buffer. Input and output signal levels are compatible with the I/O standard selected. Unused I/O pins are disabled by Libero SoC software and include a weak pull-up resistor. During power-up, the used I/O pins are tristated with no pull-up or pull-down resistors until I/O enable (there is a delay after voltage stabilizes, and different I/O banks power up sequentially to avoid a surge of ICCI).

Unused I/Os are configured as follows:

- Output buffer is disabled (with tristate value of high impedance)
- Input buffer is disabled (with tristate value of high impedance)
- Weak pull-up is programmed

Some of these pins are also multiplexed with integrated peripherals in the MSS (Ethernet MAC and external memory controller).

Unused MSS I/Os are neither weakly pulled-up nor weakly pulled-down. The Schmitt trigger is disabled. Essentially, I/Os have the reset values as defined in Table 19-25 IOMUX_n_CR, in the *SmartFusion Microcontroller Subsystem User's Guide*.

By default, during programming I/Os become tristated and weakly pulled up to VCCxxxxIOBx. You can modify the I/O states during programming in FlashPro. For more details, refer to "Specifying I/O States During Programming" on page 1-3. With the VCCI and VCC supplies continuously powered up, when the device transitions from programming to operating mode, the I/Os are instantly configured to the desired user configuration. For more information, see the SmartFusion FPGA User I/Os section in the *SmartFusion FPGA Fabric User's Guide*.

Special Function Pins

Name	Type	Polarity/Bus Size	Description
NC			No connect This pin is not connected to circuitry within the device. These pins can be driven to any voltage or can be left floating with no effect on the operation of the device.
DC			Do not connect. This pin should not be connected to any signals on the PCB. These pins should be left unconnected.
LPXIN	In	1	Low power 32 KHz crystal oscillator. Input from the 32 KHz oscillator. Pin for connecting a low power 32 KHz watch crystal. If not used, the LPXIN pin can be left floating. For more information, see the PLLs, Clock Conditioning Circuitry, and On-Chip Crystal Oscillators section in the *SmartFusion Microcontroller Subsystem User's Guide*.
LPXOUT	In	1	Low power 32 KHz crystal oscillator. Output to the 32 KHz oscillator. Pin for connecting a low power 32 KHz watch crystal. If not used, the LPXOUT pin can be left floating. For more information, see the PLLs, Clock Conditioning Circuitry, and On-Chip Crystal Oscillators section in the *SmartFusion Microcontroller Subsystem User's Guide*.
MAINXIN	In	1	Main crystal oscillator circuit. Input to the crystal oscillator circuit. Pin for connecting an external crystal, ceramic resonator, or RC network. When using an external crystal or ceramic oscillator, external capacitors are also recommended. Refer to documentation from the crystal oscillator manufacturer for proper capacitor value. If an external RC network or clock input is used, the RC components are connected to the MAINXIN pin, with MAINXOUT left floating. When the main crystal oscillator is not being used, MAINXIN and MAINXOUT pins can be left floating. For more information, see the PLLs, Clock Conditioning Circuitry, and On-Chip Crystal Oscillators section in the *SmartFusion Microcontroller Subsystem User's Guide*.
MAINXOUT	Out	1	Main crystal oscillator circuit. Output from the crystal oscillator circuit. Pin for connecting external crystal or ceramic resonator. When using an external crystal or ceramic oscillator, external capacitors are also recommended. Refer to documentation from the crystal oscillator manufacturer for proper capacitor value. If an external RC network or clock input is used, the RC components are connected to the MAINXIN pin, with MAINXOUT left floating. When the main crystal oscillator is not being used, MAINXIN and MAINXOUT pins can be left floating. For more information, see the PLLs, Clock Conditioning Circuitry, and On-Chip Crystal Oscillators section in the *SmartFusion Microcontroller Subsystem User's Guide*.

Name	Type	Polarity/Bus Size	Description
NCAP		1	Negative capacitor connection. This is the negative terminal of the charge pump. A capacitor, with a 2.2 µF recommended value, is required to connect between PCAP and NCAP. Analog charge pump capacitors are not needed if none of the analog SCB features are used and none of the SDDs are used. In that case it should be left unconnected.
PCAP		1	Positive Capacitor connection. This is the positive terminal of the charge pump. A capacitor, with a 2.2 µF recommended value, is required to connect between PCAP and NCAP. If this pin is not used, it must be left unconnected/floating. In this case, no capacitor is needed. Analog charge pump capacitors are not needed if none of the analog SCB features are used, and none of the SDDs are used.
PTBASE		1	Pass transistor base connection This is the control signal of the voltage regulator. This pin should be connected to the base of an external pass transistor used with the 1.5 V internal voltage regulator and can be floating if not used.
PTEM		1	Pass transistor emitter connection. This is the feedback input of the voltage regulator. This pin should be connected to the emitter of an external pass transistor used with the 1.5 V internal voltage regulator and can be floating if not used.
MSS_RESET_N		Low	Low Reset signal which can be used as an external reset and can also be used as a system level reset under control of the Cortex-M3 processor. MSS_RESET_N is an output asserted low after power-on reset. The direction of MSS_RESET_N changes during the execution of the Microsemi System Boot when chip-level reset is enabled. The Microsemi System Boot reconfigures MSS_RESET_N to become a reset input signal when chip-level reset is enabled. It has an internal pull-up so it can be left floating. In the current software, the MSS_RESET_N is modeled as an external input signal only.
PU_N	In	Low	Push-button is the connection for the external momentary switch used to turn on the 1.5 V voltage regulator and can be floating if not used.

JTAG Pins

SmartFusion cSoCs have a separate bank for the dedicated JTAG pins. The JTAG pins can be run at any voltage from 1.5 V to 3.3 V (nominal). VCC must also be powered for the JTAG state machine to operate, even if the device is in bypass mode; VJTAG alone is insufficient. Both VJTAG and VCC to the SmartFusion cSoC part must be supplied to allow JTAG signals to transition the SmartFusion cSoC. Isolating the JTAG power supply in a separate I/O bank gives greater flexibility with supply selection and simplifies power supply and PCB design. If the JTAG interface is neither used nor planned to be used, the VJTAG pin together with the TRSTB pin could be tied to GND.

Name	Type	Polarity/ Bus Size	Description
JTAGSEL	In	1	JTAG controller selection Depending on the state of the JTAGSEL pin, an external JTAG controller will either see the FPGA fabric TAP/auxiliary TAP (High) or the Cortex-M3 JTAG debug interface (Low). The JTAGSEL pin should be connected to an external pull-up resistor such that the default configuration selects the FPGA fabric TAP.
TCK	In	1	Test clock Serial input for JTAG boundary scan, ISP, and UJTAG. The TCK pin does not have an internal pull-up/-down resistor. If JTAG is not used, it is recommended to tie off TCK to GND or V_{JTAG} through a resistor placed close to the FPGA pin. This prevents JTAG operation in case TMS enters an undesired state. Note that to operate at all V_{JTAG} voltages, 500 Ω to 1 kΩ will satisfy the requirements. Refer to Table 5-1 on page 5-11 for more information. Can be left floating when unused.
TDI	In	1	Test data Serial input for JTAG boundary scan, ISP, and UJTAG usage. There is an internal weak pull-up resistor on the TDI pin.
TDO	Out	1	Test data Serial output for JTAG boundary scan, ISP, and UJTAG usage.
TMS	In	HIGH	Test mode select The TMS pin controls the use of the IEEE1532 boundary scan pins (TCK, TDI, TDO, TRST). There is an internal weak pull-up resistor on the TMS pin. Can be left floating when unused.
TRSTB	In	HIGH	Boundary scan reset pin The TRST pin functions as an active low input to asynchronously initialize (or reset) the boundary scan circuitry. There is an internal weak pull-up resistor on the TRST pin. If JTAG is not used, an external pull-down resistor could be included to ensure the TAP is held in reset mode. The resistor values must be chosen from Table 5-1 on page 5-11 and must satisfy the parallel resistance value requirement. The values in Table 5-1 on page 5-11 correspond to the resistor recommended when a single device is used. The values correspond to the equivalent parallel resistor when multiple devices are connected via a JTAG chain. In critical applications, an upset in the JTAG circuit could allow entering an undesired JTAG state. In such cases, it is recommended that you tie off TRST to GND through a resistor placed close to the FPGA pin. The TRSTB pin also resets the serial wire JTAG – debug port (SWJ-DP) circuitry within the Cortex-M3. Can be left floating when unused.

***Table 5-1* • Recommended Tie-Off Values for the TCK and TRST Pins**

VJTAG	Tie-Off Resistance[1, 2]
VJTAG at 3.3 V	200 Ω to 1 kΩ
VJTAG at 2.5 V	200 Ω to 1 kΩ
VJTAG at 1.8 V	500 Ω to 1 kΩ
VJTAG at 1.5 V	500 Ω to 1 kΩ

Notes:

1. *The TCK pin can be pulled up/down.*
2. *The TRST pin can only be pulled down.*
1. *Equivalent parallel resistance if more than one device is on JTAG chain.*

Microcontroller Subsystem (MSS)

Name	Type	Polarity/ Bus Size	Description
External Memory Controller			
EMC_ABx	Out	26	External memory controller address bus Can also be used as an FPGA user I/O (see "IO" on page 5-6).
EMC_BYTENx	Out	LOW/2	External memory controller byte enable Can also be used as an FPGA user I/O (see "IO" on page 5-6).
EMC_CLK	Out	Rise	External memory controller clock Can also be used as an FPGA user I/O (see "IO" on page 5-6).
EMC_CSx_N	Out	LOW/2	External memory controller chip selects Can also be used as an FPGA User IO (see "IO" on page 5-6).
EMC_DBx	In/out	16	External memory controller data bus Can also be used as an FPGA user I/O (see "IO" on page 5-6).
EMC_OENx_N	Out	LOW/2	External memory controller output enables Can also be used as an FPGA User IO (see "IO" on page 5-6).
EMC_RW_N	Out	Level	External memory controller read/write. Read = High, write = Low. Can also be used as an FPGA user I/O (see "IO" on page 5-6).
Inter-Integrated Circuit (I^2C) Peripherals			
I2C_0_SCL	In/out	1	I^2C bus serial clock output. First I^2C. Can also be used as an MSS GPIO (see "GPIO_x" on page 5-6).
I2C_0_SDA	In/out	1	I^2C bus serial data input/output. First I^2C. Can also be used as an MSS GPIO (see "GPIO_x" on page 5-6).
I2C_1_SCL	In/out	1	I^2C bus serial clock output. Second I^2C. Can also be used as an MSS GPIO (see "GPIO_x" on page 5-6).
I2C_1_SDA	In/out	1	I^2C bus serial data input/output. Second I^2C. Can also be used as an MSS GPIO (see "GPIO_x" on page 5-6).
Serial Peripheral Interface (SPI) Controllers			
SPI_0_CLK	Out	1	Clock. First SPI. Can also be used as an MSS GPIO (see "GPIO_x" on page 5-6).
SPI_0_DI	In	1	Data input. First SPI. Can also be used as an MSS GPIO (see "GPIO_x" on page 5-6).
SPI_0_DO	Out	1	Data output. First SPI. Can also be used as an MSS GPIO (see "GPIO_x" on page 5-6).
SPI_0_SS	Out	1	Slave select (chip select). First SPI. Can also be used as an MSS GPIO (see "GPIO_x" on page 5-6).
SPI_1_CLK	Out	1	Clock. Second SPI. Can also be used as an MSS GPIO (see "GPIO_x" on page 5-6).
SPI_1_DI	In	1	Data input. Second SPI. Can also be used as an MSS GPIO (see "GPIO_x" on page 5-6).

Name	Type	Polarity/ Bus Size	Description
SPI_1_DO	Out	1	Data output. Second SPI. Can also be used as an MSS GPIO (see "GPIO_x" on page 5-6).
SPI_1_SS	Out	1	Slave select (chip select). Second SPI. Can also be used as an MSS GPIO (see "GPIO_x" on page 5-6).
Universal Asynchronous Receiver/Transmitter (UART) Peripherals			
UART_0_RXD	In	1	Receive data. First UART. Can also be used as an MSS GPIO (see "GPIO_x" on page 5-6).
UART_0_TXD	Out	1	Transmit data. First UART. Can also be used as an MSS GPIO (see "GPIO_x" on page 5-6).
UART_1_RXD	In	1	Receive data. Second UART. Can also be used as an MSS GPIO (see "GPIO_x" on page 5-6).
UART_1_TXD	Out	1	Transmit data. Second UART. Can also be used as an MSS GPIO (see "GPIO_x" on page 5-6).
Ethernet MAC			
MAC_CLK	In	Rise	Receive clock. 50 MHz ± 50 ppm clock source received from RMII PHY. Can be left floating when unused.
MAC_CRSDV	In	High	Carrier sense/receive data valid for RMII PHY Can also be used as an FPGA User IO (see "IO" on page 5-6).
MAC_MDC	Out	Rise	RMII management clock Can also be used as an FPGA User IO (see "IO" on page 5-6).
MAC_MDIO	In/Out	1	RMII management data input/output Can also be used as an FPGA User IO (see "IO" on page 5-6).
MAC_RXDx	In	2	Ethernet MAC receive data. Data recovered and decoded by PHY. The RXD[0] signal is the least significant bit. Can also be used as an FPGA User I/O (see "IO" on page 5-6).
MAC_RXER	In	HIGH	Ethernet MAC receive error. If MACRX_ER is asserted during reception, the frame is received and status of the frame is updated with MACRX_ER. Can also be used as an FPGA user I/O (see "IO" on page 5-6).
MAC_TXDx	Out	2	Ethernet MAC transmit data. The TXD[0] signal is the least significant bit. Can also be used as an FPGA user I/O (see "IO" on page 5-6).
MAC_TXEN	Out	HIGH	Ethernet MAC transmit enable. When asserted, indicates valid data for the PHY on the TXD port. Can also be used as an FPGA User I/O (see "IO" on page 5-6).

Analog Front-End (AFE)

Name	Type	Description	Associated With	
			ADC/SDD	SCB
ABPS0	In	SCB 0 / active bipolar prescaler input 1. See the Active Bipolar Prescaler (ABPS) section in the *SmartFusion Programmable Analog User's Guide*.	ADC0	SCB0
ABPS1	In	SCB 0 / active bipolar prescaler Input 2	ADC0	SCB0
ABPS2	In	SCB 1 / active bipolar prescaler Input 1	ADC0	SCB1
ABPS3	In	SCB 1 / active bipolar prescaler Input 2	ADC0	SCB1
ABPS4	In	SCB 2 / active bipolar prescaler Input 1	ADC1	SCB2
ABPS5	In	SCB 2 / active bipolar prescaler Input 2	ADC1	SCB2
ABPS6	In	SCB 3 / active bipolar prescaler Input 1	ADC1	SCB3
ABPS7	In	SCB 3 / active bipolar prescaler input 2	ADC1	SCB3
ABPS8	In	SCB 4 / active bipolar prescaler input 1	ADC2	SCB4
ABPS9	In	SCB 4 / active bipolar prescaler input 2	ADC2	SCB4
ADC0	In	ADC 0 direct input 0 / FPGA Input. See the "Sigma-Delta Digital-to-Analog Converter (DAC)" section in the *SmartFusion Programmable Analog User's Guide*.	ADC0	SCB0
ADC1	In	ADC 0 direct input 1 / FPGA input	ADC0	SCB0
ADC2	In	ADC 0 direct input 2 / FPGA input	ADC0	SCB1
ADC3	In	ADC 0 direct input 3 / FPGA input	ADC0	SCB1
ADC4	In	ADC 1 direct input 0 / FPGA input	ADC1	SCB2
ADC5	In	ADC 1 direct input 1 / FPGA input	ADC1	SCB2
ADC6	In	ADC 1 direct input 2 / FPGA input	ADC1	SCB3
ADC7	In	ADC 1 direct input 3 / FPGA input	ADC1	SCB3
ADC8	In	ADC 2 direct input 0 / FPGA input	ADC2	SCB4
ADC9	In	ADC 2 direct input 1 / FPGA input	ADC2	SCB4
ADC10	In	ADC 2 direct input 2 / FPGA input	ADC2	N/A
ADC11	In	ADC 2 direct input 3 / FPGA input	ADC2	N/A
CM0	In	SCB 0 / high side of current monitor / comparator Positive input. See the Current Monitor section in the *SmartFusion Programmable Analog User's Guide*.	ADC0	SCB0
CM1	In	SCB 1 / high side of current monitor / comparator. Positive input.	ADC0	SCB1
CM2	In	SCB 2 / high side of current monitor / comparator. Positive input.	ADC1	SCB2
CM3	In	SCB 3 / high side of current monitor / comparator. Positive input.	ADC1	SCB3
CM4	In	SCB 4 / high side of current monitor / comparator. Positive input.	ADC2	SCB4

Note: Unused analog inputs should be grounded. This aids in shielding and prevents an undesired coupling path.

Name	Type	Description	Associated With	
			ADC/SDD	SCB
TM0	In	SCB 0 / low side of current monitor / comparator Negative input / high side of temperature monitor. See the Temperature Monitor section.	ADC0	SCB0
TM1	In	SCB 1 / low side of current monitor / comparator. Negative input / high side of temperature monitor.	ADC0	SCB1
TM2	In	SCB 2 / low side of current monitor / comparator. Negative input / high side of temperature monitor.	ADC1	SCB2
TM3	In	SCB 3 low side of current monitor / comparator. Negative input / high side of temperature monitor.	ADC1	SCB3
TM4	In	SCB 4 low side of current monitor / comparator. Negative input / high side of temperature monitor.	ADC2	SCB4
SDD0	Out	Output of SDD0 See the Sigma-Delta Digital-to-Analog Converter (DAC) section in the *SmartFusion Programmable Analog User's Guide*.	SDD0	N/A
SDD1	Out	Output of SDD1	SDD1	N/A
SDD2	Out	Output of SDD2	SDD2	N/A

Note: Unused analog inputs should be grounded. This aids in shielding and prevents an undesired coupling path.

Analog Front-End Pin-Level Function Multiplexing

Table 5-2 describes the relationships between the various internal signals found in the analog front-end (AFE) and how they are multiplexed onto the external package pins. Note that, in general, only one function is available for those pads that have numerous functions listed. The exclusion to this rule is when a comparator is used; the ADC can still convert either input side of the comparator.

***Table 5-2* • Relationships Between Signals in the Analog Front-End**

Pin	ADC Channel	Dir.-In Option	Prescaler	Current Mon.	Temp. Mon.	Compar.	LVTTL	SDD MUX	SDD
ABPS0	ADC0_CH1		ABPS0_IN						
ABPS1	ADC0_CH2		ABPS1_IN						
ABPS2	ADC0_CH5		ABPS2_IN						
ABPS3	ADC0_CH6		ABPS3_IN						
ABPS4	ADC1_CH1		ABPS4_IN						
ABPS5	ADC1_CH2		ABPS5_IN						
ABPS6	ADC1_CH5		ABPS6_IN						
ABPS7	ADC1_CH6		ABPS7_IN						
ABPS8	ADC2_CH1		ABPS8_IN						
ABPS9	ADC2_CH2		ABPS9_IN						
ADC0	ADC0_CH9	Yes				CMP1_P	LVTTL0_IN		
ADC1	ADC0_CH10	Yes				CMP1_N	LVTTL1_IN	SDDM0_OUT	
ADC2	ADC0_CH11	Yes				CMP3_P	LVTTL2_IN		
ADC3	ADC0_CH12	Yes				CMP3_N	LVTTL3_IN	SDDM1_OUT	
ADC4	ADC1_CH9	Yes				CMP5_P	LVTTL4_IN		
ADC5	ADC1_CH10	Yes				CMP5_N	LVTTL5_IN	SDDM2_OUT	
ADC6	ADC1_CH11	Yes				CMP7_P	LVTTL6_IN		
ADC7	ADC1_CH12	Yes				CMP7_N	LVTTL7_IN	SDDM3_OUT	
ADC8	ADC2_CH9	Yes				CMP9_P	LVTTL8_IN		
ADC9	ADC2_CH10	Yes				CMP9_N	LVTTL9_IN	SDDM4_OUT	
ADC10	ADC2_CH11	Yes					LVTTL10_IN		
ADC11	ADC2_CH12	Yes					LVTTL11_IN		
CM0	ADC0_CH3	Yes		CM0_H		CMP0_P			
CM1	ADC0_CH7	Yes		CM1_H		CMP2_P			
CM2	ADC1_CH3	Yes		CM2_H		CMP4_P			
CM3	ADC1_CH7	Yes		CM3_H		CMP6_P			
CM4	ADC2_CH3	Yes		CM4_H		CMP8_P			
SDD0	ADC0_CH15								SDD0_OUT
SDD1	ADC1_CH15								SDD1_OUT

Notes:

1. *ABPSx_IN: Input to active bipolar prescaler channel x.*
2. *CMx_H/L: Current monitor channel x, high/low side.*
3. *TMx_IO: Temperature monitor channel x.*
4. *CMPx_P/N: Comparator channel x, positive/negative input.*
5. *LVTTLx_IN: LVTTL I/O channel x.*
6. *SDDMx_OUT: Output from sigma-delta DAC MUX channel x.*
7. *SDDx_OUT: Direct output from sigma-delta DAC channel x.*

***Table 5-2* • Relationships Between Signals in the Analog Front-End**

Pin	ADC Channel	Dir.-In Option	Prescaler	Current Mon.	Temp. Mon.	Compar.	LVTTL	SDD MUX	SDD
SDD2	ADC2_CH15								SDD2_OUT
TM0	ADC0_CH4	Yes		CM0_L	TM0_IO	CMP0_N			
TM1	ADC0_CH8	Yes		CM1_L	TM1_IO	CMP2_N			
TM2	ADC1_CH4	Yes		CM2_L	TM2_IO	CMP4_N			
TM3	ADC1_CH8	Yes		CM3_L	TM3_IO	CMP6_N			
TM4	ADC2_CH4	Yes		CM4_L	TM4_IO	CMP8_N			

Notes:

1. *ABPSx_IN: Input to active bipolar prescaler channel x.*
2. *CMx_H/L: Current monitor channel x, high/low side.*
3. *TMx_IO: Temperature monitor channel x.*
4. *CMPx_P/N: Comparator channel x, positive/negative input.*
5. *LVTTLx_IN: LVTTL I/O channel x.*
6. *SDDMx_OUT: Output from sigma-delta DAC MUX channel x.*
7. *SDDx_OUT: Direct output from sigma-delta DAC channel x.*

Pin Assignment Tables

TQ144

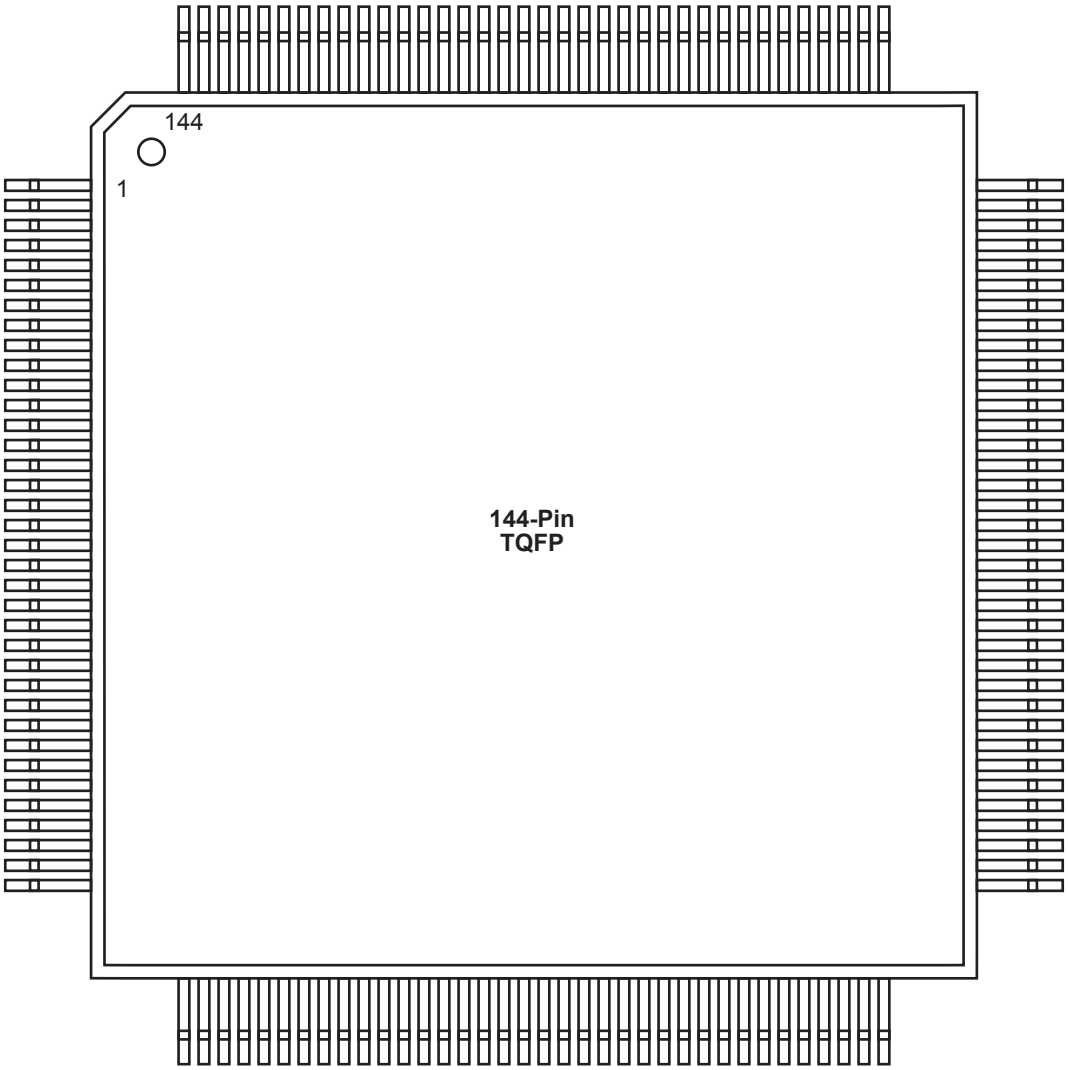

Note

For Package Manufacturing and Environmental information, visit the Resource Center at http://www.microsemi.com/soc/products/solutions/package/docs.aspx.

TQ144	
Pin Number	**A2F060 Function**
1	VCCPLL0
2	VCOMPLA0
3	GNDQ
4	GFA2/IO42PDB5V0
5	GFB2/IO42NDB5V0
6	GFC2/IO41PDB5V0
7	IO41NDB5V0
8	VCC
9	GND
10	VCCFPGAIOB5
11	IO38PDB5V0
12	IO38NDB5V0
13	IO36PDB5V0
14	IO36NDB5V0
15	GND
16	GNDRCOSC
17	VCCRCOSC
18	MSS_RESET_N
19	GPIO_0/IO33RSB4V0
20	GPIO_1/IO32RSB4V0
21	GPIO_2/IO31RSB4V0
22	GPIO_3/IO30RSB4V0
23	GPIO_4/IO29RSB4V0
24	GND
25	VCCMSSIOB4
26	VCC
27	GPIO_5/IO28RSB4V0
28	GPIO_6/IO27RSB4V0
29	GPIO_7/IO26RSB4V0
30	GPIO_8/IO25RSB4V0
31	VCCESRAM
32	GNDSDD0
33	VCC33SDD0
34	VCC15A
35	PCAP
36	NCAP

TQ144	
Pin Number	**A2F060 Function**
37	VCC33AP
38	VCC33N
39	SDD0
40	GNDA
41	GNDAQ
42	GNDAQ
43	ADC0
44	ADC1
45	ADC2
46	ADC3
47	ADC4
48	ADC5
49	ADC6
50	ADC7
51	ADC8
52	ADC9
53	ADC10
54	NC
55	NC
56	NC
57	GND15ADC0
58	VCC15ADC0
59	GND33ADC0
60	VCC33ADC0
61	GND33ADC0
62	VAREF0
63	ABPS0
64	ABPS1
65	CM0
66	TM0
67	GNDTM0
68	GNDAQ
69	GNDA
70	GNDVAREF
71	VAREFOUT
72	PU_N

TQ144	
Pin Number	**A2F060 Function**
73	VCC33A
74	PTEM
75	PTBASE
76	SPI_0_DO/GPIO_16
77	SPI_0_DI/GPIO_17
78	SPI_0_CLK/GPIO_18
79	SPI_0_SS/GPIO_19
80	UART_0_RXD/GPIO_21
81	UART_0_TXD/GPIO_20
82	UART_1_RXD/GPIO_29
83	UART_1_TXD/GPIO_28
84	VCC
85	VCCMSSIOB2
86	GND
87	I2C_1_SDA/GPIO_30
88	I2C_1_SCL/GPIO_31
89	I2C_0_SDA/GPIO_22
90	I2C_0_SCL/GPIO_23
91	GNDENVM
92	VCCENVM
93	JTAGSEL
94	TCK
95	TDI
96	TMS
97	TDO
98	TRSTB
99	VJTAG
100	VDDBAT
101	VCCLPXTAL
102	LPXOUT
103	LPXIN
104	GNDLPXTAL
105	GNDMAINXTAL
106	MAINXOUT
107	MAINXIN
108	VCCMAINXTAL

TQ144	
Pin Number	**A2F060 Function**
109	VPP
110	GNDQ
111	GCA1/IO20PDB0V0
112	GCA0/IO20NDB0V0
113	GCB1/IO19PDB0V0
114	GCB0/IO19NDB0V0
115	GCC1/IO18PDB0V0
116	GCC0/IO18NDB0V0
117	VCCFPGAIOB0
118	GND
119	VCC
120	IO14PDB0V0
121	IO14NDB0V0
122	IO13NSB0V0
123	IO11PDB0V0
124	IO11NDB0V0
125	IO09PDB0V0
126	IO09NDB0V0
127	VCCFPGAIOB0
128	GND
129	IO07PDB0V0
130	IO07NDB0V0
131	IO06PDB0V0
132	IO06NDB0V0
133	IO05PDB0V0
134	IO05NDB0V0
135	IO03PDB0V0
136	IO03NDB0V0
137	VCCFPGAIOB0
138	GND
139	VCC
140	IO01PDB0V0
141	IO01NDB0V0
142	IO00PDB0V0
143	IO00NDB0V0
144	GNDQ

CS288

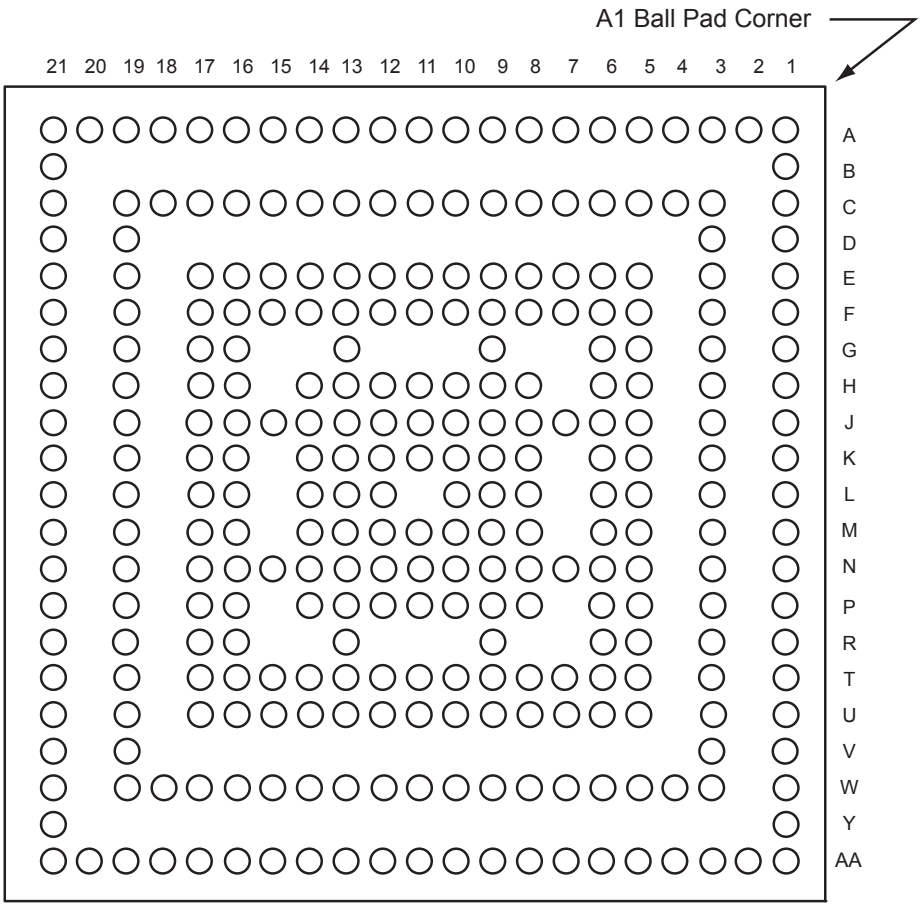

Note: Bottom view

Note

For Package Manufacturing and Environmental information, visit the Resource Center at http://www.microsemi.com/soc/products/solutions/package/docs.aspx.

Pin No.	CS288		
	A2F060 Function	A2F200 Function	A2F500 Function
A1	VCCFPGAIOB0	VCCFPGAIOB0	VCCFPGAIOB0
A2	GNDQ	GNDQ	GNDQ
A3	EMC_CLK/IO00NDB0V0	EMC_CLK/GAA0/IO00NDB0V0	EMC_CLK/GAA0/IO02NDB0V0
A4	EMC_RW_N/IO00PDB0V0	EMC_RW_N/GAA1/IO00PDB0V0	EMC_RW_N/GAA1/IO02PDB0V0
A5	GND	GND	GND
A6	EMC_CS1_N/IO01PDB0V0	EMC_CS1_N/GAB1/IO01PDB0V0	EMC_CS1_N/GAB1/IO05PDB0V0
A7	EMC_CS0_N/IO01NDB0V0	EMC_CS0_N/GAB0/IO01NDB0V0	EMC_CS0_N/GAB0/IO05NDB0V0
A8	EMC_AB[0]/IO04NPB0V0	EMC_AB[0]/IO04NPB0V0	EMC_AB[0]/IO06NPB0V0
A9	VCCFPGAIOB0	VCCFPGAIOB0	VCCFPGAIOB0
A10	EMC_AB[4]/IO06NDB0V0	EMC_AB[4]/IO06NDB0V0	EMC_AB[4]/IO10NDB0V0
A11	EMC_AB[8]/IO08NPB0V0	EMC_AB[8]/IO08NPB0V0	EMC_AB[8]/IO13NPB0V0
A12	EMC_AB[14]/IO11NPB0V0	EMC_AB[14]/IO11NPB0V0	EMC_AB[14]/IO15NPB0V0
A13	GND	GND	GND
A14	EMC_AB[18]/IO13NDB0V0	EMC_AB[18]/IO13NDB0V0	EMC_AB[18]/IO18NDB0V0
A15	EMC_AB[24]/IO16NDB0V0	EMC_AB[24]/IO16NDB0V0	EMC_AB[24]/IO20NDB0V0
A16	EMC_AB[25]/IO16PDB0V0	EMC_AB[25]/IO16PDB0V0	EMC_AB[25]/IO20PDB0V0
A17	VCCFPGAIOB0	VCCFPGAIOB0	VCCFPGAIOB0
A18	EMC_AB[20]/IO14NDB0V0	EMC_AB[20]/IO14NDB0V0	EMC_AB[20]/IO21NDB0V0
A19	EMC_AB[21]/IO14PDB0V0	EMC_AB[21]/IO14PDB0V0	EMC_AB[21]/IO21PDB0V0
A20	GNDQ	GNDQ	GNDQ
A21	GND	GND	GND
AA1	ADC1	ABPS1	ABPS1
AA2	GNDAQ	GNDAQ	GNDAQ
AA3	GNDA	GNDA	GNDA
AA4	VCC33N	VCC33N	VCC33N
AA5	SDD0	SDD0	SDD0
AA6	ADC0	ABPS0	ABPS0
AA7	NC	GNDTM0	GNDTM0
AA8	NC	ABPS2	ABPS2
AA9	NC	VAREF0	VAREF0
AA10	NC	GND15ADC0	GND15ADC0
AA11	ADC9	ADC6	ADC6
AA12	ABPS1	ABPS7	ABPS7
AA13	ADC6	TM2	TM2

Note: Shading denotes pins that do not have completely identical functions from density to density. For example, the bank assignment can be different for an I/O, or the function might be available only on a larger density device.

Pin No.	CS288		
	A2F060 Function	A2F200 Function	A2F500 Function
AA14	NC	ABPS4	ABPS4
AA15	NC	SDD1	SDD1
AA16	GNDVAREF	GNDVAREF	GNDVAREF
AA17	VAREFOUT	VAREFOUT	VAREFOUT
AA18	PU_N	PU_N	PU_N
AA19	VCC33A	VCC33A	VCC33A
AA20	PTEM	PTEM	PTEM
AA21	GND	GND	GND
B1	GND	GND	GND
B21	IO17PDB0V0	GBB2/IO20NDB1V0	GBB2/IO27NDB1V0
C1	EMC_DB[15]/IO45PDB5V0	EMC_DB[15]/GAA2/IO71PDB5V0	EMC_DB[15]/GAA2/IO88PDB5V0
C3	VCOMPLA0	VCOMPLA	VCOMPLA0
C4	VCCPLL0	VCCPLL	VCCPLL0
C5	VCCFPGAIOB0	VCCFPGAIOB0	VCCFPGAIOB0
C6	EMC_AB[1]/IO04PPB0V0	EMC_AB[1]/IO04PPB0V0	EMC_AB[1]/IO06PPB0V0
C7	GND	GND	GND
C8	EMC_OEN0_N/IO03NDB0V0	EMC_OEN0_N/IO03NDB0V0	EMC_OEN0_N/IO08NDB0V0
C9	EMC_AB[2]/IO05NDB0V0	EMC_AB[2]/IO05NDB0V0	EMC_AB[2]/IO09NDB0V0
C10	EMC_AB[5]/IO06PDB0V0	EMC_AB[5]/IO06PDB0V0	EMC_AB[5]/IO10PDB0V0
C11	VCCFPGAIOB0	VCCFPGAIOB0	VCCFPGAIOB0
C12	EMC_AB[9]/IO08PPB0V0	EMC_AB[9]/IO08PPB0V0	EMC_AB[9]/IO13PPB0V0
C13	EMC_AB[15]/IO11PPB0V0	EMC_AB[15]/IO11PPB0V0	EMC_AB[15]/IO15PPB0V0
C14	EMC_AB[19]/IO13PDB0V0	EMC_AB[19]/IO13PDB0V0	EMC_AB[19]/IO18PDB0V0
C15	GND	GND	GND
C16	EMC_AB[22]/IO15NDB0V0	EMC_AB[22]/IO15NDB0V0	EMC_AB[22]/IO19NDB0V0
C17	EMC_AB[23]/IO15PDB0V0	EMC_AB[23]/IO15PDB0V0	EMC_AB[23]/IO19PDB0V0
C18	NC	NC	VCCPLL1
C19	NC	NC	VCOMPLA1
C21	IO17NDB0V0	GBA2/IO20PDB1V0	GBA2/IO27PDB1V0
D1	EMC_DB[14]/IO45NDB5V0	EMC_DB[14]/GAB2/IO71NDB5V0	EMC_DB[14]/GAB2/IO88NDB5V0
D3	VCCFPGAIOB5	VCCFPGAIOB5	VCCFPGAIOB5
D19	GND	GND	GND
D21	VCCFPGAIOB1	VCCFPGAIOB1	VCCFPGAIOB1
E1	EMC_DB[13]/IO44PDB5V0	EMC_DB[13]/GAC2/IO70PDB5V0	EMC_DB[13]/GAC2/IO87PDB5V0

Note: Shading denotes pins that do not have completely identical functions from density to density. For example, the bank assignment can be different for an I/O, or the function might be available only on a larger density device.

Pin No.	CS288		
	A2F060 Function	A2F200 Function	A2F500 Function
E3	EMC_DB[12]/IO44NDB5V0	EMC_DB[12]/IO70NDB5V0	EMC_DB[12]/IO87NDB5V0
E5	GNDQ	GNDQ	GNDQ
E6	EMC_BYTEN[0]/IO02NDB0V0	EMC_BYTEN[0]/GAC0/IO02NDB0V0	EMC_BYTEN[0]/GAC0/IO07NDB0V0
E7	EMC_BYTEN[1]/IO02PDB0V0	EMC_BYTEN[1]/GAC1/IO02PDB0V0	EMC_BYTEN[1]/GAC1/IO07PDB0V0
E8	EMC_OEN1_N/IO03PDB0V0	EMC_OEN1_N/IO03PDB0V0	EMC_OEN1_N/IO08PDB0V0
E9	EMC_AB[3]/IO05PDB0V0	EMC_AB[3]/IO05PDB0V0	EMC_AB[3]/IO09PDB0V0
E10	EMC_AB[10]/IO09NDB0V0	EMC_AB[10]/IO09NDB0V0	EMC_AB[10]/IO11NDB0V0
E11	EMC_AB[7]/IO07PDB0V0	EMC_AB[7]/IO07PDB0V0	EMC_AB[7]/IO12PDB0V0
E12	EMC_AB[13]/IO10PDB0V0	EMC_AB[13]/IO10PDB0V0	EMC_AB[13]/IO14PDB0V0
E13	EMC_AB[16]/IO12NDB0V0	EMC_AB[16]/IO12NDB0V0	EMC_AB[16]/IO17NDB0V0
E14	EMC_AB[17]/IO12PDB0V0	EMC_AB[17]/IO12PDB0V0	EMC_AB[17]/IO17PDB0V0
E15	GCC0/IO18NPB0V0	GCB0/IO27NDB1V0	GCB0/IO34NDB1V0
E16	GCA1/IO20PPB0V0	GCB1/IO27PDB1V0	GCB1/IO34PDB1V0
E17	GCC1/IO18PPB0V0	GCB2/IO24PDB1V0	GCB2/IO33PDB1V0
E19	GCB2/IO22PPB1V0	GCA0/IO28NDB1V0	GCA0/IO36NDB1V0
E21	IO21NDB1V0	GCA1/IO28PDB1V0	GCA1/IO36PDB1V0
F1	VCCFPGAIOB5	VCCFPGAIOB5	VCCFPGAIOB5
F3	GFB2/IO42NDB5V0	GFB2/IO68NDB5V0	GFB2/IO85NDB5V0
F5	GFA2/IO42PDB5V0	GFA2/IO68PDB5V0	GFA2/IO85PDB5V0
F6	EMC_DB[11]/IO43PDB5V0	EMC_DB[11]/IO69PDB5V0	EMC_DB[11]/IO86PDB5V0
F7	GND	GND	GND
F8	NC	GFC1/IO66PPB5V0	GFC1/IO83PPB5V0
F9	VCCFPGAIOB0	VCCFPGAIOB0	VCCFPGAIOB0
F10	EMC_AB[11]/IO09PDB0V0	EMC_AB[11]/IO09PDB0V0	EMC_AB[11]/IO11PDB0V0
F11	EMC_AB[6]/IO07NDB0V0	EMC_AB[6]/IO07NDB0V0	EMC_AB[6]/IO12NDB0V0
F12	EMC_AB[12]/IO10NDB0V0	EMC_AB[12]/IO10NDB0V0	EMC_AB[12]/IO14NDB0V0
F13	GND	GND	GND
F14	GCB1/IO19PPB0V0	GCC1/IO26PPB1V0	GCC1/IO35PPB1V0
F15	GNDQ	GNDQ	GNDQ
F16	VCCFPGAIOB1	VCCFPGAIOB1	VCCFPGAIOB1
F17	GCB0/IO19NPB0V0	IO24NDB1V0	IO33NDB1V0
F19	IO23NDB1V0	GDB1/IO30PDB1V0	GDB1/IO39PDB1V0
F21	GCA2/IO21PDB1V0	GDB0/IO30NDB1V0	GDB0/IO39NDB1V0
G1	IO41NDB5V0	IO67NDB5V0	IO84NDB5V0

Note: Shading denotes pins that do not have completely identical functions from density to density. For example, the bank assignment can be different for an I/O, or the function might be available only on a larger density device.

Pin No.	CS288		
	A2F060 Function	A2F200 Function	A2F500 Function
G3	GFC2/IO41PDB5V0	GFC2/IO67PDB5V0	GFC2/IO84PDB5V0
G5	NC	GFB1/IO65PDB5V0	GFB1/IO82PDB5V0
G6	EMC_DB[10]/IO43NDB5V0	EMC_DB[10]/IO69NDB5V0	EMC_DB[10]/IO86NDB5V0
G9	NC	GFC0/IO66NPB5V0	GFC0/IO83NPB5V0
G13	GCA0/IO20NPB0V0	GCC0/IO26NPB1V0	GCC0/IO35NPB1V0
G16	NC	GDA0/IO31NDB1V0	GDA0/IO40NDB1V0
G17	IO22NPB1V0	GDC1/IO29PDB1V0	GDC1/IO38PDB1V0
G19	GCC2/IO23PDB1V0	GDC0/IO29NDB1V0	GDC0/IO38NDB1V0
G21	GND	GND	GND
H1	EMC_DB[9]/IO40PPB5V0	EMC_DB[9]/GEC1/IO63PPB5V0	EMC_DB[9]/GEC1/IO80PPB5V0
H3	GND	GND	GND
H5	NC	GFB0/IO65NDB5V0	GFB0/IO82NDB5V0
H6	EMC_DB[7]/IO39PDB5V0	EMC_DB[7]/GEB1/IO62PDB5V0	EMC_DB[7]/GEB1/IO79PDB5V0
H8	GND	GND	GND
H9	VCC	VCC	VCC
H10	GND	GND	GND
H11	VCC	VCC	VCC
H12	GND	GND	GND
H13	VCC	VCC	VCC
H14	GND	GND	GND
H16	NC	GDA1/IO31PDB1V0	GDA1/IO40PDB1V0
H17	NC	GDC2/IO32PPB1V0	GDC2/IO41PPB1V0
H19	VCCFPGAIOB1	VCCFPGAIOB1	VCCFPGAIOB1
H21	NC	GDB2/IO33PDB1V0	GDB2/IO42PDB1V0
J1	EMC_DB[4]/IO38NPB5V0	EMC_DB[4]/GEA0/IO61NPB5V0	EMC_DB[4]/GEA0/IO78NPB5V0
J3	EMC_DB[8]/IO40NPB5V0	EMC_DB[8]/GEC0/IO63NPB5V0	EMC_DB[8]/GEC0/IO80NPB5V0
J5	EMC_DB[1]/IO36PDB5V0	EMC_DB[1]/GEB2/IO59PDB5V0	EMC_DB[1]/GEB2/IO76PDB5V0
J6	EMC_DB[6]/IO39NDB5V0	EMC_DB[6]/GEB0/IO62NDB5V0	EMC_DB[6]/GEB0/IO79NDB5V0
J7	VCCFPGAIOB5	VCCFPGAIOB5	VCCFPGAIOB5
J8	VCC	VCC	VCC
J9	GND	GND	GND
J10	VCC	VCC	VCC
J11	GND	GND	GND
J12	VCC	VCC	VCC

Note: Shading denotes pins that do not have completely identical functions from density to density. For example, the bank assignment can be different for an I/O, or the function might be available only on a larger density device.

Pin No.	CS288		
	A2F060 Function	A2F200 Function	A2F500 Function
J13	GND	GND	GND
J14	VCC	VCC	VCC
J15	VPP	VPP	VPP
J16	NC	IO32NPB1V0	IO41NPB1V0
J17	NC	GNDQ	GNDQ
J19	VCCMAINXTAL	VCCMAINXTAL	VCCMAINXTAL
J21	NC	GDA2/IO33NDB1V0	GDA2/IO42NDB1V0
K1	GND	GND	GND
K3	EMC_DB[5]/IO38PPB5V0	EMC_DB[5]/GEA1/IO61PPB5V0	EMC_DB[5]/GEA1/IO78PPB5V0
K5	EMC_DB[0]/IO36NDB5V0	EMC_DB[0]/GEA2/IO59NDB5V0	EMC_DB[0]/GEA2/IO76NDB5V0
K6	EMC_DB[3]/IO37PPB5V0	EMC_DB[3]/GEC2/IO60PPB5V0	EMC_DB[3]/GEC2/IO77PPB5V0
K8	GND	GND	GND
K9	VCC	VCC	VCC
K10	GND	GND	GND
K11	VCC	VCC	VCC
K12	GND	GND	GND
K13	VCC	VCC	VCC
K14	GND	GND	GND
K16	LPXOUT	LPXOUT	LPXOUT
K17	GNDLPXTAL	GNDLPXTAL	GNDLPXTAL
K19	GNDMAINXTAL	GNDMAINXTAL	GNDMAINXTAL
K21	MAINXIN	MAINXIN	MAINXIN
L1	GNDRCOSC	GNDRCOSC	GNDRCOSC
L3	VCCFPGAIOB5	VCCFPGAIOB5	VCCFPGAIOB5
L5	EMC_DB[2]/IO37NPB5V0	EMC_DB[2]/IO60NPB5V0	EMC_DB[2]/IO77NPB5V0
L6	NC	GNDQ	GNDQ
L8	VCC	VCC	VCC
L9	GND	GND	GND
L10	VCC	VCC	VCC
L12	VCC	VCC	VCC
L13	GND	GND	GND
L14	VCC	VCC	VCC
L16	VCCLPXTAL	VCCLPXTAL	VCCLPXTAL
L17	VDDBAT	VDDBAT	VDDBAT

Note: Shading denotes pins that do not have completely identical functions from density to density. For example, the bank assignment can be different for an I/O, or the function might be available only on a larger density device.

Pin No.	CS288		
	A2F060 Function	A2F200 Function	A2F500 Function
L19	LPXIN	LPXIN	LPXIN
L21	MAINXOUT	MAINXOUT	MAINXOUT
M1	VCCRCOSC	VCCRCOSC	VCCRCOSC
M3	MSS_RESET_N	MSS_RESET_N	MSS_RESET_N
M5	GPIO_5/IO28RSB4V0	GPIO_5/IO42RSB4V0	GPIO_5/IO51RSB4V0
M6	GND	GND	GND
M8	GND	GND	GND
M9	VCC	VCC	VCC
M10	GND	GND	GND
M11	VCC	VCC	VCC
M12	GND	GND	GND
M13	VCC	VCC	VCC
M14	GND	GND	GND
M16	TMS	TMS	TMS
M17	VJTAG	VJTAG	VJTAG
M19	TDO	TDO	TDO
M21	TRSTB	TRSTB	TRSTB
N1	VCCMSSIOB4	VCCMSSIOB4	VCCMSSIOB4
N3	GND	GND	GND
N5	GPIO_4/IO29RSB4V0	GPIO_4/IO43RSB4V0	GPIO_4/IO52RSB4V0
N6	GPIO_8/IO25RSB4V0	GPIO_8/IO39RSB4V0	GPIO_8/IO48RSB4V0
N7	GPIO_9/IO24RSB4V0	GPIO_9/IO38RSB4V0	GPIO_9/IO47RSB4V0
N8	VCC	VCC	VCC
N9	GND	GND	GND
N10	VCC	VCC	VCC
N11	GND	GND	GND
N12	VCC	VCC	VCC
N13	GND	GND	GND
N14	VCC	VCC	VCC
N15	GND	GND	GND
N16	TCK	TCK	TCK
N17	TDI	TDI	TDI
N19	GNDENVM	GNDENVM	GNDENVM
N21	VCCENVM	VCCENVM	VCCENVM

Note: Shading denotes pins that do not have completely identical functions from density to density. For example, the bank assignment can be different for an I/O, or the function might be available only on a larger density device.

Pin No.	CS288		
	A2F060 Function	A2F200 Function	A2F500 Function
P1	GPIO_0/IO33RSB4V0	MAC_MDC/IO48RSB4V0	MAC_MDC/IO57RSB4V0
P3	GPIO_7/IO26RSB4V0	GPIO_7/IO40RSB4V0	GPIO_7/IO49RSB4V0
P5	GPIO_6/IO27RSB4V0	GPIO_6/IO41RSB4V0	GPIO_6/IO50RSB4V0
P6	VCCMSSIOB4	VCCMSSIOB4	VCCMSSIOB4
P8	GND	GND	GND
P9	VCC	VCC	VCC
P10	GND	GND	GND
P11	VCC	VCC	VCC
P12	GND	GND	GND
P13	VCC	VCC	VCC
P14	GND	GND	GND
P16	JTAGSEL	JTAGSEL	JTAGSEL
P17	I2C_0_SCL/GPIO_23	I2C_0_SCL/GPIO_23	I2C_0_SCL/GPIO_23
P19	VCCMSSIOB2	VCCMSSIOB2	VCCMSSIOB2
P21	GND	GND	GND
R1	GPIO_2/IO31RSB4V0	MAC_MDIO/IO49RSB4V0	MAC_MDIO/IO58RSB4V0
R3	GPIO_1/IO32RSB4V0	MAC_TXEN/IO52RSB4V0	MAC_TXEN/IO61RSB4V0
R5	GPIO_3/IO30RSB4V0	MAC_TXD[0]/IO56RSB4V0	MAC_TXD[0]/IO65RSB4V0
R6	GPIO_10/IO35RSB4V0	MAC_CRSDV/IO51RSB4V0	MAC_CRSDV/IO60RSB4V0
R9	GNDA	GNDA	GNDA
R13	GNDA	GNDA	GNDA
R16	UART_1_RXD/GPIO_29	UART_1_RXD/GPIO_29	UART_1_RXD/GPIO_29
R17	UART_1_TXD/GPIO_28	UART_1_TXD/GPIO_28	UART_1_TXD/GPIO_28
R19	I2C_0_SDA/GPIO_22	I2C_0_SDA/GPIO_22	I2C_0_SDA/GPIO_22
R21	I2C_1_SDA/GPIO_30	I2C_1_SDA/GPIO_30	I2C_1_SDA/GPIO_30
T1	GND	GND	GND
T3	NC	MAC_TXD[1]/IO55RSB4V0	MAC_TXD[1]/IO64RSB4V0
T5	NC	MAC_RXD[1]/IO53RSB4V0	MAC_RXD[1]/IO62RSB4V0
T6	GPIO_11/IO34RSB4V0	MAC_RXER/IO50RSB4V0	MAC_RXER/IO59RSB4V0
T7	NC	CM1	CM1
T8	NC	ADC1	ADC1
T9	NC	GND33ADC0	GND33ADC0
T10	NC	VCC15ADC0	VCC15ADC0
T11	GND33ADC0	GND33ADC1	GND33ADC1

Note: Shading denotes pins that do not have completely identical functions from density to density. For example, the bank assignment can be different for an I/O, or the function might be available only on a larger density device.

Pin No.	CS288		
	A2F060 Function	A2F200 Function	A2F500 Function
T12	VAREF0	VAREF1	VAREF1
T13	ADC7	ADC4	ADC4
T14	TM0	TM3	TM3
T15	SPI_1_SS/GPIO_27	SPI_1_SS/GPIO_27	SPI_1_SS/GPIO_27
T16	VCCMSSIOB2	VCCMSSIOB2	VCCMSSIOB2
T17	UART_0_RXD/GPIO_21	UART_0_RXD/GPIO_21	UART_0_RXD/GPIO_21
T19	UART_0_TXD/GPIO_20	UART_0_TXD/GPIO_20	UART_0_TXD/GPIO_20
T21	I2C_1_SCL/GPIO_31	I2C_1_SCL/GPIO_31	I2C_1_SCL/GPIO_31
U1	NC	MAC_RXD[0]/IO54RSB4V0	MAC_RXD[0]/IO63RSB4V0
U3	VCCMSSIOB4	VCCMSSIOB4	VCCMSSIOB4
U5	VCC33SDD0	VCC33SDD0	VCC33SDD0
U6	VCC15A	VCC15A	VCC15A
U7	NC	ABPS3	ABPS3
U8	NC	ADC2	ADC2
U9	NC	VCC33ADC0	VCC33ADC0
U10	GND15ADC0	GND15ADC1	GND15ADC1
U11	VCC33ADC0	VCC33ADC1	VCC33ADC1
U12	ADC10	ADC7	ADC7
U13	ABPS0	ABPS6	ABPS6
U14	GNDTM0	GNDTM1	GNDTM1
U15	SPI_1_CLK/GPIO_26	SPI_1_CLK/GPIO_26	SPI_1_CLK/GPIO_26
U16	SPI_0_CLK/GPIO_18	SPI_0_CLK/GPIO_18	SPI_0_CLK/GPIO_18
U17	SPI_0_SS/GPIO_19	SPI_0_SS/GPIO_19	SPI_0_SS/GPIO_19
U19	GND	GND	GND
U21	SPI_1_DO/GPIO_24	SPI_1_DO/GPIO_24	SPI_1_DO/GPIO_24
V1	NC	MAC_CLK	MAC_CLK
V3	GNDSDD0	GNDSDD0	GNDSDD0
V19	SPI_1_DI/GPIO_25	SPI_1_DI/GPIO_25	SPI_1_DI/GPIO_25
V21	VCCMSSIOB2	VCCMSSIOB2	VCCMSSIOB2
W1	PCAP	PCAP	PCAP
W3	NCAP	NCAP	NCAP
W4	ADC2	CM0	CM0
W5	ADC3	TM0	TM0
W6	ADC4	TM1	TM1

Note: Shading denotes pins that do not have completely identical functions from density to density. For example, the bank assignment can be different for an I/O, or the function might be available only on a larger density device.

Pin No.	CS288		
	A2F060 Function	A2F200 Function	A2F500 Function
W7	NC	ADC0	ADC0
W8	NC	ADC3	ADC3
W9	NC	GND33ADC0	GND33ADC0
W10	VCC15ADC0	VCC15ADC1	VCC15ADC1
W11	GND33ADC0	GND33ADC1	GND33ADC1
W12	ADC8	ADC5	ADC5
W13	CM0	CM3	CM3
W14	ADC5	CM2	CM2
W15	NC	ABPS5	ABPS5
W16	GNDAQ	GNDAQ	GNDAQ
W17	NC	VCC33SDD1	VCC33SDD1
W18	NC	GNDSDD1	GNDSDD1
W19	PTBASE	PTBASE	PTBASE
W21	SPI_0_DI/GPIO_17	SPI_0_DI/GPIO_17	SPI_0_DI/GPIO_17
Y1	VCC33AP	VCC33AP	VCC33AP
Y21	SPI_0_DO/GPIO_16	SPI_0_DO/GPIO_16	SPI_0_DO/GPIO_16

Note: Shading denotes pins that do not have completely identical functions from density to density. For example, the bank assignment can be different for an I/O, or the function might be available only on a larger density device.

PQ208

Note

For Package Manufacturing and Environmental information, visit the Resource Center at http://www.microsemi.com/soc/products/solutions/package/docs.aspx.

Pin Number	PQ208	
	A2F200	A2F500
1	VCCPLL	VCCPLL0
2	VCOMPLA	VCOMPLA0
3	GNDQ	GNDQ
4	EMC_DB[15]/GAA2/IO71PDB5V0	GAA2/IO88PDB5V0
5	EMC_DB[14]/GAB2/IO71NDB5V0	GAB2/IO88NDB5V0
6	EMC_DB[13]/GAC2/IO70PDB5V0	GAC2/IO87PDB5V0
7	EMC_DB[12]/IO70NDB5V0	IO87NDB5V0
8	VCC	VCC
9	GND	GND
10	VCCFPGAIOB5	VCCFPGAIOB5
11	EMC_DB[11]/IO69PDB5V0	IO86PDB5V0
12	EMC_DB[10]/IO69NDB5V0	IO86NDB5V0
13	GFA2/IO68PSB5V0	GFA2/IO85PSB5V0
14	GFA1/IO64PDB5V0	GFA1/IO81PDB5V0
15	GFA0/IO64NDB5V0	GFA0/IO81NDB5V0
16	EMC_DB[9]/GEC1/IO63PDB5V0	GEC1/IO80PDB5V0
17	EMC_DB[8]/GEC0/IO63NDB5V0	GEC0/IO80NDB5V0
18	EMC_DB[7]/GEB1/IO62PDB5V0	GEB1/IO79PDB5V0
19	EMC_DB[6]/GEB0/IO62NDB5V0	GEB0/IO79NDB5V0
20	EMC_DB[5]/GEA1/IO61PDB5V0	GEA1/IO78PDB5V0
21	EMC_DB[4]/GEA0/IO61NDB5V0	GEA0/IO78NDB5V0
22	VCC	VCC
23	GND	GND
24	VCCFPGAIOB5	VCCFPGAIOB5
25	EMC_DB[3]/GEC2/IO60PDB5V0	GEC2/IO77PDB5V0
26	EMC_DB[2]/IO60NDB5V0	IO77NDB5V0
27	EMC_DB[1]/GEB2/IO59PDB5V0	GEB2/IO76PDB5V0
28	EMC_DB[0]/GEA2/IO59NDB5V0	GEA2/IO76NDB5V0
29	VCC	VCC
30	GND	GND
31	GNDRCOSC	GNDRCOSC
32	VCCRCOSC	VCCRCOSC
33	MSS_RESET_N	MSS_RESET_N
34	VCCESRAM	VCCESRAM
35	MAC_MDC/IO48RSB4V0	MAC_MDC/IO57RSB4V0
36	MAC_MDIO/IO49RSB4V0	MAC_MDIO/IO58RSB4V0

Pin Number	PQ208	
	A2F200	A2F500
37	MAC_TXEN/IO52RSB4V0	MAC_TXEN/IO61RSB4V0
38	MAC_CRSDV/IO51RSB4V0	MAC_CRSDV/IO60RSB4V0
39	MAC_RXER/IO50RSB4V0	MAC_RXER/IO59RSB4V0
40	GND	GND
41	VCCMSSIOB4	VCCMSSIOB4
42	VCC	VCC
43	MAC_TXD[0]/IO56RSB4V0	MAC_TXD[0]/IO65RSB4V0
44	MAC_TXD[1]/IO55RSB4V0	MAC_TXD[1]/IO64RSB4V0
45	MAC_RXD[0]/IO54RSB4V0	MAC_RXD[0]/IO63RSB4V0
46	MAC_RXD[1]/IO53RSB4V0	MAC_RXD[1]/IO62RSB4V0
47	MAC_CLK	MAC_CLK
48	GNDSDD0	GNDSDD0
49	VCC33SDD0	VCC33SDD0
50	VCC15A	VCC15A
51	PCAP	PCAP
52	NCAP	NCAP
53	VCC33AP	VCC33AP
54	VCC33N	VCC33N
55	SDD0	SDD0
56	GNDA	GNDA
57	GNDAQ	GNDAQ
58	ABPS0	ABPS0
59	ABPS1	ABPS1
60	CM0	CM0
61	TM0	TM0
62	GNDTM0	GNDTM0
63	TM1	TM1
64	CM1	CM1
65	ABPS3	ABPS3
66	ABPS2	ABPS2
67	ADC0	ADC0
68	ADC1	ADC1
69	ADC2	ADC2
70	ADC3	ADC3
71	VAREF0	VAREF0
72	GND33ADC0	GND33ADC0

Pin Number	PQ208	
	A2F200	A2F500
73	VCC33ADC0	VCC33ADC0
74	GND33ADC0	GND33ADC0
75	VCC15ADC0	VCC15ADC0
76	GND15ADC0	GND15ADC0
77	GND15ADC1	GND15ADC1
78	VCC15ADC1	VCC15ADC1
79	GND33ADC1	GND33ADC1
80	VCC33ADC1	VCC33ADC1
81	GND33ADC1	GND33ADC1
82	VAREF1	VAREF1
83	ADC7	ADC7
84	ADC6	ADC6
85	ADC5	ADC5
86	ADC4	ADC4
87	ABPS6	ABPS6
88	ABPS7	ABPS7
89	CM3	CM3
90	TM3	TM3
91	GNDTM1	GNDTM1
92	TM2	TM2
93	CM2	CM2
94	ABPS5	ABPS5
95	ABPS4	ABPS4
96	GNDAQ	GNDAQ
97	GNDA	GNDA
98	NC	NC
99	GNDVAREF	GNDVAREF
100	VAREFOUT	VAREFOUT
101	PU_N	PU_N
102	VCC33A	VCC33A
103	PTEM	PTEM
104	PTBASE	PTBASE
105	SPI_0_DO/GPIO_16	SPI_0_DO/GPIO_16
106	SPI_0_DI/GPIO_17	SPI_0_DI/GPIO_17
107	SPI_0_CLK/GPIO_18	SPI_0_CLK/GPIO_18
108	SPI_0_SS/GPIO_19	SPI_0_SS/GPIO_19

Pin Number	PQ208	
	A2F200	A2F500
109	UART_0_RXD/GPIO_21	UART_0_RXD/GPIO_21
110	UART_0_TXD/GPIO_20	UART_0_TXD/GPIO_20
111	UART_1_RXD/GPIO_29	UART_1_RXD/GPIO_29
112	UART_1_TXD/GPIO_28	UART_1_TXD/GPIO_28
113	VCC	VCC
114	VCCMSSIOB2	VCCMSSIOB2
115	GND	GND
116	I2C_1_SDA/GPIO_30	I2C_1_SDA/GPIO_30
117	I2C_1_SCL/GPIO_31	I2C_1_SCL/GPIO_31
118	I2C_0_SDA/GPIO_22	I2C_0_SDA/GPIO_22
119	I2C_0_SCL/GPIO_23	I2C_0_SCL/GPIO_23
120	GNDENVM	GNDENVM
121	VCCENVM	VCCENVM
122	JTAGSEL	JTAGSEL
123	TCK	TCK
124	TDI	TDI
125	TMS	TMS
126	TDO	TDO
127	TRSTB	TRSTB
128	VJTAG	VJTAG
129	VDDBAT	VDDBAT
130	VCCLPXTAL	VCCLPXTAL
131	LPXOUT	LPXOUT
132	LPXIN	LPXIN
133	GNDLPXTAL	GNDLPXTAL
134	GNDMAINXTAL	GNDMAINXTAL
135	MAINXOUT	MAINXOUT
136	MAINXIN	MAINXIN
137	VCCMAINXTAL	VCCMAINXTAL
138	GND	GND
139	VCC	VCC
140	VPP	VPP
141	VCCFPGAIOB1	VCCFPGAIOB1
142	GDA0/IO31NDB1V0	GDA0/IO40NDB1V0
143	GDA1/IO31PDB1V0	GDA1/IO40PDB1V0
144	GDC0/IO29NSB1V0	GDC0/IO38NSB1V0

Pin Number	PQ208	
	A2F200	A2F500
145	GCA0/IO28NDB1V0	GCA0/IO36NDB1V0
146	GCA1/IO28PDB1V0	GCA1/IO36PDB1V0
147	VCCFPGAIOB1	VCCFPGAIOB1
148	GND	GND
149	VCC	VCC
150	IO25NDB1V0	IO30NDB1V0
151	GCC2/IO25PDB1V0	GBC2/IO30PDB1V0
152	IO23NDB1V0	IO28NDB1V0
153	GCA2/IO23PDB1V0	GCA2/IO28PDB1V0
154	GBC2/IO21PSB1V0	GBB2/IO27NDB1V0
155	GBA2/IO20PSB1V0	GBA2/IO27PDB1V0
156	GNDQ	GNDQ
157	GNDQ	GNDQ
158	VCCFPGAIOB0	VCCFPGAIOB0
159	GBA1/IO19PDB0V0	GBA1/IO23PDB0V0
160	GBA0/IO19NDB0V0	GBA0/IO23NDB0V0
161	VCCFPGAIOB0	VCCFPGAIOB0
162	GND	GND
163	VCC	VCC
164	EMC_AB[25]/IO16PDB0V0	IO21PDB0V0
165	EMC_AB[24]/IO16NDB0V0	IO21NDB0V0
166	EMC_AB[23]/IO15PDB0V0	IO20PDB0V0
167	EMC_AB[22]/IO15NDB0V0	IO20NDB0V0
168	EMC_AB[21]/IO14PDB0V0	IO19PDB0V0
169	EMC_AB[20]/IO14NDB0V0	IO19NDB0V0
170	EMC_AB[19]/IO13PDB0V0	IO18PDB0V0
171	EMC_AB[18]/IO13NDB0V0	IO18NDB0V0
172	EMC_AB[17]/IO12PDB0V0	IO17PDB0V0
173	EMC_AB[16]/IO12NDB0V0	IO17NDB0V0
174	VCCFPGAIOB0	VCCFPGAIOB0
175	GND	GND
176	VCC	VCC
177	EMC_AB[15]/IO11PDB0V0	IO14PDB0V0
178	EMC_AB[14]/IO11NDB0V0	IO14NDB0V0
179	EMC_AB[13]/IO10PDB0V0	IO13PDB0V0
180	EMC_AB[12]/IO10NDB0V0	IO13NDB0V0

Pin Number	PQ208	
	A2F200	A2F500
181	EMC_AB[11]/IO09PDB0V0	IO12PDB0V0
182	EMC_AB[10]/IO09NDB0V0	IO12NDB0V0
183	EMC_AB[9]/IO08PDB0V0	IO11PDB0V0
184	EMC_AB[8]/IO08NDB0V0	IO11NDB0V0
185	EMC_AB[7]/IO07PDB0V0	IO10PDB0V0
186	EMC_AB[6]/IO07NDB0V0	IO10NDB0V0
187	VCCFPGAIOB0	VCCFPGAIOB0
188	GND	GND
189	VCC	VCC
190	EMC_AB[5]/IO06PDB0V0	IO08PDB0V0
191	EMC_AB[4]/IO06NDB0V0	IO08NDB0V0
192	EMC_AB[3]/IO05PDB0V0	GAC1/IO07PDB0V0
193	EMC_AB[2]/IO05NDB0V0	GAC0/IO07NDB0V0
194	EMC_AB[1]/IO04PDB0V0	IO04PDB0V0
195	EMC_AB[0]/IO04NDB0V0	IO04NDB0V0
196	EMC_OEN1_N/IO03PDB0V0	IO03PDB0V0
197	EMC_OEN0_N/IO03NDB0V0	IO03NDB0V0
198	EMC_BYTEN[1]/GAC1/IO02PDB0V0	GAA1/IO02PDB0V0
199	EMC_BYTEN[0]/GAC0/IO02NDB0V0	GAA0/IO02NDB0V0
200	VCCFPGAIOB0	VCCFPGAIOB0
201	GND	GND
202	VCC	VCC
203	EMC_CS1_N/GAB1/IO01PDB0V0	IO01PDB0V0
204	EMC_CS0_N/GAB0/IO01NDB0V0	IO01NDB0V0
205	EMC_RW_N/GAA1/IO00PDB0V0	IO00PDB0V0
206	EMC_CLK/GAA0/IO00NDB0V0	IO00NDB0V0
207	VCCFPGAIOB0	VCCFPGAIOB0
208	GNDQ	GNDQ

FG256

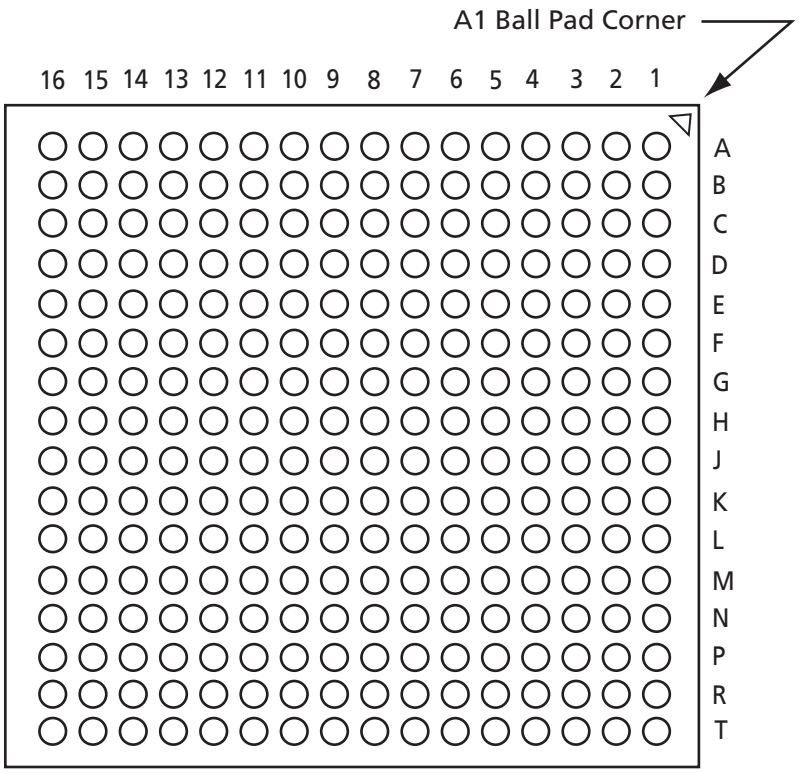

Note

For Package Manufacturing and Environmental information, visit the Resource Center at http://www.microsemi.com/soc/products/solutions/package/docs.aspx.

Pin No.	FG256		
	A2F060 Function	A2F200 Function	A2F500 Function
A1	GND	GND	GND
A2	VCCFPGAIOB0	VCCFPGAIOB0	VCCFPGAIOB0
A3	EMC_AB[0]/IO04NDB0V0	EMC_AB[0]/IO04NDB0V0	EMC_AB[0]/IO06NDB0V0
A4	EMC_AB[1]/IO04PDB0V0	EMC_AB[1]/IO04PDB0V0	EMC_AB[1]/IO06PDB0V0
A5	GND	GND	GND
A6	EMC_AB[3]/IO05PDB0V0	EMC_AB[3]/IO05PDB0V0	EMC_AB[3]/IO09PDB0V0
A7	EMC_AB[5]/IO06PDB0V0	EMC_AB[5]/IO06PDB0V0	EMC_AB[5]/IO10PDB0V0
A8	VCCFPGAIOB0	VCCFPGAIOB0	VCCFPGAIOB0
A9	GND	GND	GND
A10	EMC_AB[14]/IO11NDB0V0	EMC_AB[14]/IO11NDB0V0	EMC_AB[14]/IO15NDB0V0
A11	EMC_AB[15]/IO11PDB0V0	EMC_AB[15]/IO11PDB0V0	EMC_AB[15]/IO15PDB0V0
A12	GND	GND	GND
A13	EMC_AB[20]/IO14NDB0V0	EMC_AB[20]/IO14NDB0V0	EMC_AB[20]/IO21NDB0V0
A14	EMC_AB[24]/IO16NDB0V0	EMC_AB[24]/IO16NDB0V0	EMC_AB[24]/IO20NDB0V0
A15	VCCFPGAIOB0	VCCFPGAIOB0	VCCFPGAIOB0
A16	GND	GND	GND
B1	EMC_DB[15]/IO45PDB5V0	EMC_DB[15]/GAA2/IO71PDB5V0	EMC_DB[15]/GAA2/IO88PDB5V0
B2	GND	GND	GND
B3	EMC_BYTEN[1]/IO02PDB0V0	EMC_BYTEN[1]/GAC1/IO02PDB0V0	EMC_BYTEN[1]/GAC1/IO07PDB0V0
B4	EMC_OEN0_N/IO03NDB0V0	EMC_OEN0_N/IO03NDB0V0	EMC_OEN0_N/IO08NDB0V0
B5	EMC_OEN1_N/IO03PDB0V0	EMC_OEN1_N/IO03PDB0V0	EMC_OEN1_N/IO08PDB0V0
B6	EMC_AB[2]/IO05NDB0V0	EMC_AB[2]/IO05NDB0V0	EMC_AB[2]/IO09NDB0V0
B7	EMC_AB[4]/IO06NDB0V0	EMC_AB[4]/IO06NDB0V0	EMC_AB[4]/IO10NDB0V0
B8	EMC_AB[9]/IO08PDB0V0	EMC_AB[9]/IO08PDB0V0	EMC_AB[9]/IO13PDB0V0
B9	EMC_AB[12]/IO10NDB0V0	EMC_AB[12]/IO10NDB0V0	EMC_AB[12]/IO14NDB0V0
B10	EMC_AB[13]/IO10PDB0V0	EMC_AB[13]/IO10PDB0V0	EMC_AB[13]/IO14PDB0V0
B11	EMC_AB[16]/IO12NDB0V0	EMC_AB[16]/IO12NDB0V0	EMC_AB[16]/IO17NDB0V0
B12	EMC_AB[18]/IO13NDB0V0	EMC_AB[18]/IO13NDB0V0	EMC_AB[18]/IO18NDB0V0
B13	EMC_AB[21]/IO14PDB0V0	EMC_AB[21]/IO14PDB0V0	EMC_AB[21]/IO21PDB0V0
B14	EMC_AB[25]/IO16PDB0V0	EMC_AB[25]/IO16PDB0V0	EMC_AB[25]/IO20PDB0V0
B15	GND	GND	GND
B16	GNDQ	GNDQ	GNDQ
C1	EMC_DB[14]/IO45NDB5V0	EMC_DB[14]/GAB2/IO71NDB5V0	EMC_DB[14]/GAB2/IO88NDB5V0
C2	VCCPLL0	VCCPLL	VCCPLL0

Note: Shading denotes pins that do not have completely identical functions from density to density. For example, the bank assignment can be different for an I/O, or the function might be available only on a larger density device.

Pin No.	FG256		
	A2F060 Function	A2F200 Function	A2F500 Function
C3	EMC_BYTEN[0]/IO02NDB0V0	EMC_BYTEN[0]/GAC0/IO02NDB0V0	EMC_BYTEN[0]/GAC0/IO07NDB0V0
C4	VCCFPGAIOB0	VCCFPGAIOB0	VCCFPGAIOB0
C5	EMC_CS0_N/IO01NDB0V0	EMC_CS0_N/GAB0/IO01NDB0V0	EMC_CS0_N/GAB0/IO05NDB0V0
C6	EMC_CS1_N/IO01PDB0V0	EMC_CS1_N/GAB1/IO01PDB0V0	EMC_CS1_N/GAB1/IO05PDB0V0
C7	GND	GND	GND
C8	EMC_AB[8]/IO08NDB0V0	EMC_AB[8]/IO08NDB0V0	EMC_AB[8]/IO13NDB0V0
C9	EMC_AB[11]/IO09PDB0V0	EMC_AB[11]/IO09PDB0V0	EMC_AB[11]/IO11PDB0V0
C10	VCCFPGAIOB0	VCCFPGAIOB0	VCCFPGAIOB0
C11	EMC_AB[17]/IO12PDB0V0	EMC_AB[17]/IO12PDB0V0	EMC_AB[17]/IO17PDB0V0
C12	EMC_AB[19]/IO13PDB0V0	EMC_AB[19]/IO13PDB0V0	EMC_AB[19]/IO18PDB0V0
C13	GND	GND	GND
C14	GCC0/IO18NPB0V0	GBA2/IO20PPB1V0	GBA2/IO27PPB1V0
C15	GCB0/IO19NDB0V0	GCA2/IO23PDB1V0	GCA2/IO28PDB1V0
C16	GCB1/IO19PDB0V0	IO23NDB1V0	IO28NDB1V0
D1	VCCFPGAIOB5	VCCFPGAIOB5	VCCFPGAIOB5
D2	VCOMPLA0	VCOMPLA	VCOMPLA0
D3	GND	GND	GND
D4	GNDQ	GNDQ	GNDQ
D5	EMC_CLK/IO00NDB0V0	EMC_CLK/GAA0/IO00NDB0V0	EMC_CLK/GAA0/IO02NDB0V0
D6	EMC_RW_N/IO00PDB0V0	EMC_RW_N/GAA1/IO00PDB0V0	EMC_RW_N/GAA1/IO02PDB0V0
D7	EMC_AB[6]/IO07NDB0V0	EMC_AB[6]/IO07NDB0V0	EMC_AB[6]/IO12NDB0V0
D8	EMC_AB[7]/IO07PDB0V0	EMC_AB[7]/IO07PDB0V0	EMC_AB[7]/IO12PDB0V0
D9	EMC_AB[10]/IO09NDB0V0	EMC_AB[10]/IO09NDB0V0	EMC_AB[10]/IO11NDB0V0
D10	EMC_AB[22]/IO15NDB0V0	EMC_AB[22]/IO15NDB0V0	EMC_AB[22]/IO19NDB0V0
D11	EMC_AB[23]/IO15PDB0V0	EMC_AB[23]/IO15PDB0V0	EMC_AB[23]/IO19PDB0V0
D12	GNDQ	GNDQ	GNDQ
D13	GCC1/IO18PPB0V0	GBB2/IO20NPB1V0	GBB2/IO27NPB1V0
D14	GCA0/IO20NDB0V0	GCB2/IO24PDB1V0	GCB2/IO33PDB1V0
D15	GCA1/IO20PDB0V0	IO24NDB1V0	IO33NDB1V0
D16	VCCFPGAIOB1	VCCFPGAIOB1	VCCFPGAIOB1
E1	EMC_DB[13]/IO44PDB5V0	EMC_DB[13]/GAC2/IO70PDB5V0	EMC_DB[13]/GAC2/IO87PDB5V0
E2	EMC_DB[12]/IO44NDB5V0	EMC_DB[12]/IO70NDB5V0	EMC_DB[12]/IO87NDB5V0
E3	GFA2/IO42PDB5V0	GFA2/IO68PDB5V0	GFA2/IO85PDB5V0
E4	EMC_DB[10]/IO43NPB5V0	EMC_DB[10]/IO69NPB5V0	EMC_DB[10]/IO86NPB5V0

Note: Shading denotes pins that do not have completely identical functions from density to density. For example, the bank assignment can be different for an I/O, or the function might be available only on a larger density device.

Pin No.	FG256		
	A2F060 Function	A2F200 Function	A2F500 Function
E5	GNDQ	GNDQ	GNDQ
E6	GND	GND	GND
E7	VCCFPGAIOB0	VCCFPGAIOB0	VCCFPGAIOB0
E8	GND	GND	GND
E9	VCCFPGAIOB0	VCCFPGAIOB0	VCCFPGAIOB0
E10	GND	GND	GND
E11	VCCFPGAIOB0	VCCFPGAIOB0	VCCFPGAIOB0
E12	GCB2/IO22PDB1V0	GCA1/IO28PDB1V0	GCA1/IO36PDB1V0
E13	VCCFPGAIOB1	VCCFPGAIOB1	VCCFPGAIOB1
E14	GCA2/IO21PDB1V0	GCB1/IO27PDB1V0	GCB1/IO34PDB1V0
E15	GCC2/IO23PDB1V0	GDC1/IO29PDB1V0	GDC1/IO38PDB1V0
E16	IO23NDB1V0	GDC0/IO29NDB1V0	GDC0/IO38NDB1V0
F1	EMC_DB[9]/IO40PDB5V0	EMC_DB[9]/GEC1/IO63PDB5V0	EMC_DB[9]/GEC1/IO80PDB5V0
F2	GND	GND	GND
F3	GFB2/IO42NDB5V0	GFB2/IO68NDB5V0	GFB2/IO85NDB5V0
F4	VCCFPGAIOB5	VCCFPGAIOB5	VCCFPGAIOB5
F5	EMC_DB[11]/IO43PPB5V0	EMC_DB[11]/IO69PPB5V0	EMC_DB[11]/IO86PPB5V0
F6	VCCFPGAIOB5	VCCFPGAIOB5	VCCFPGAIOB5
F7	GND	GND	GND
F8	VCC	VCC	VCC
F9	GND	GND	GND
F10	VCC	VCC	VCC
F11	GND	GND	GND
F12	IO22NDB1V0	GCA0/IO28NDB1V0	GCA0/IO36NDB1V0
F13	NC	GNDQ	GNDQ
F14	IO21NDB1V0	GCB0/IO27NDB1V0	GCB0/IO34NDB1V0
F15	GND	GND	GND
F16	VCCENVM	VCCENVM	VCCENVM
G1	EMC_DB[8]/IO40NDB5V0	EMC_DB[8]/GEC0/IO63NDB5V0	EMC_DB[8]/GEC0/IO80NDB5V0
G2	EMC_DB[7]/IO39PDB5V0	EMC_DB[7]/GEB1/IO62PDB5V0	EMC_DB[7]/GEB1/IO79PDB5V0
G3	EMC_DB[6]/IO39NDB5V0	EMC_DB[6]/GEB0/IO62NDB5V0	EMC_DB[6]/GEB0/IO79NDB5V0
G4	GFC2/IO41PDB5V0	GFC2/IO67PDB5V0	GFC2/IO84PDB5V0
G5	IO41NDB5V0	IO67NDB5V0	IO84NDB5V0
G6	GND	GND	GND

Note: Shading denotes pins that do not have completely identical functions from density to density. For example, the bank assignment can be different for an I/O, or the function might be available only on a larger density device.

Pin No.	FG256		
	A2F060 Function	A2F200 Function	A2F500 Function
G7	VCC	VCC	VCC
G8	GND	GND	GND
G9	VCC	VCC	VCC
G10	GND	GND	GND
G11	VCCFPGAIOB1	VCCFPGAIOB1	VCCFPGAIOB1
G12	VPP	VPP	VPP
G13	TRSTB	TRSTB	TRSTB
G14	TMS	TMS	TMS
G15	TCK	TCK	TCK
G16	GNDENVM	GNDENVM	GNDENVM
H1	GND	GND	GND
H2	EMC_DB[5]/IO38PPB5V0	EMC_DB[5]/GEA1/IO61PPB5V0	EMC_DB[5]/GEA1/IO78PPB5V0
H3	VCCFPGAIOB5	VCCFPGAIOB5	VCCFPGAIOB5
H4	EMC_DB[1]/IO36PDB5V0	EMC_DB[1]/GEB2/IO59PDB5V0	EMC_DB[1]/GEB2/IO76PDB5V0
H5	EMC_DB[0]/IO36NDB5V0	EMC_DB[0]/GEA2/IO59NDB5V0	EMC_DB[0]/GEA2/IO76NDB5V0
H6	VCCFPGAIOB5	VCCFPGAIOB5	VCCFPGAIOB5
H7	GND	GND	GND
H8	VCC	VCC	VCC
H9	GND	GND	GND
H10	VCC	VCC	VCC
H11	GND	GND	GND
H12	VJTAG	VJTAG	VJTAG
H13	TDO	TDO	TDO
H14	TDI	TDI	TDI
H15	JTAGSEL	JTAGSEL	JTAGSEL
H16	GND	GND	GND
J1	EMC_DB[4]/IO38NPB5V0	EMC_DB[4]/GEA0/IO61NPB5V0	EMC_DB[4]/GEA0/IO78NPB5V0
J2	EMC_DB[3]/IO37PDB5V0	EMC_DB[3]/GEC2/IO60PDB5V0	EMC_DB[3]/GEC2/IO77PDB5V0
J3	EMC_DB[2]/IO37NDB5V0	EMC_DB[2]/IO60NDB5V0	EMC_DB[2]/IO77NDB5V0
J4	GNDRCOSC	GNDRCOSC	GNDRCOSC
J5	NC	GNDQ	GNDQ
J6	GND	GND	GND
J7	VCC	VCC	VCC
J8	GND	GND	GND

Note: Shading denotes pins that do not have completely identical functions from density to density. For example, the bank assignment can be different for an I/O, or the function might be available only on a larger density device.

Pin No.	FG256		
	A2F060 Function	A2F200 Function	A2F500 Function
J9	VCC	VCC	VCC
J10	GND	GND	GND
J11	VCCMSSIOB2	VCCMSSIOB2	VCCMSSIOB2
J12	I2C_0_SCL/GPIO_23	I2C_0_SCL/GPIO_23	I2C_0_SCL/GPIO_23
J13	I2C_0_SDA/GPIO_22	I2C_0_SDA/GPIO_22	I2C_0_SDA/GPIO_22
J14	I2C_1_SCL/GPIO_31	I2C_1_SCL/GPIO_31	I2C_1_SCL/GPIO_31
J15	VCCMSSIOB2	VCCMSSIOB2	VCCMSSIOB2
J16	I2C_1_SDA/GPIO_30	I2C_1_SDA/GPIO_30	I2C_1_SDA/GPIO_30
K1	GPIO_1/IO32RSB4V0	MAC_MDIO/IO49RSB4V0	MAC_MDIO/IO58RSB4V0
K2	GPIO_0/IO33RSB4V0	MAC_MDC/IO48RSB4V0	MAC_MDC/IO57RSB4V0
K3	VCCMSSIOB4	VCCMSSIOB4	VCCMSSIOB4
K4	MSS_RESET_N	MSS_RESET_N	MSS_RESET_N
K5	VCCRCOSC	VCCRCOSC	VCCRCOSC
K6	VCCMSSIOB4	VCCMSSIOB4	VCCMSSIOB4
K7	GND	GND	GND
K8	VCC	VCC	VCC
K9	GND	GND	GND
K10	VCC	VCC	VCC
K11	GND	GND	GND
K12	UART_0_RXD/GPIO_21	UART_0_RXD/GPIO_21	UART_0_RXD/GPIO_21
K13	GND	GND	GND
K14	UART_1_TXD/GPIO_28	UART_1_TXD/GPIO_28	UART_1_TXD/GPIO_28
K15	UART_1_RXD/GPIO_29	UART_1_RXD/GPIO_29	UART_1_RXD/GPIO_29
K16	UART_0_TXD/GPIO_20	UART_0_TXD/GPIO_20	UART_0_TXD/GPIO_20
L1	GND	GND	GND
L2	GPIO_2/IO31RSB4V0	MAC_TXEN/IO52RSB4V0	MAC_TXEN/IO61RSB4V0
L3	GPIO_3/IO30RSB4V0	MAC_CRSDV/IO51RSB4V0	MAC_CRSDV/IO60RSB4V0
L4	GPIO_4/IO29RSB4V0	MAC_RXER/IO50RSB4V0	MAC_RXER/IO59RSB4V0
L5	GPIO_9/IO24RSB4V0	MAC_CLK	MAC_CLK
L6	GND	GND	GND
L7	VCC	VCC	VCC
L8	GND	GND	GND
L9	VCC	VCC	VCC
L10	GND	GND	GND

Note: Shading denotes pins that do not have completely identical functions from density to density. For example, the bank assignment can be different for an I/O, or the function might be available only on a larger density device.

Pin No.	FG256		
	A2F060 Function	A2F200 Function	A2F500 Function
L11	VCCMSSIOB2	VCCMSSIOB2	VCCMSSIOB2
L12	SPI_1_DO/GPIO_24	SPI_1_DO/GPIO_24	SPI_1_DO/GPIO_24
L13	SPI_1_SS/GPIO_27	SPI_1_SS/GPIO_27	SPI_1_SS/GPIO_27
L14	SPI_1_CLK/GPIO_26	SPI_1_CLK/GPIO_26	SPI_1_CLK/GPIO_26
L15	SPI_1_DI/GPIO_25	SPI_1_DI/GPIO_25	SPI_1_DI/GPIO_25
L16	GND	GND	GND
M1	GPIO_5/IO28RSB4V0	MAC_TXD[0]/IO56RSB4V0	MAC_TXD[0]/IO65RSB4V0
M2	GPIO_6/IO27RSB4V0	MAC_TXD[1]/IO55RSB4V0	MAC_TXD[1]/IO64RSB4V0
M3	GPIO_7/IO26RSB4V0	MAC_RXD[0]/IO54RSB4V0	MAC_RXD[0]/IO63RSB4V0
M4	GND	GND	GND
M5	NC	ADC3	ADC3
M6	NC	GND15ADC0	GND15ADC0
M7	GND33ADC0	GND33ADC1	GND33ADC1
M8	GND33ADC0	GND33ADC1	GND33ADC1
M9	ADC7	ADC4	ADC4
M10	GNDTM0	GNDTM1	GNDTM1
M11	ADC6	TM2	TM2
M12	ADC5	CM2	CM2
M13	SPI_0_SS/GPIO_19	SPI_0_SS/GPIO_19	SPI_0_SS/GPIO_19
M14	VCCMSSIOB2	VCCMSSIOB2	VCCMSSIOB2
M15	SPI_0_CLK/GPIO_18	SPI_0_CLK/GPIO_18	SPI_0_CLK/GPIO_18
M16	SPI_0_DI/GPIO_17	SPI_0_DI/GPIO_17	SPI_0_DI/GPIO_17
N1	GPIO_8/IO25RSB4V0	MAC_RXD[1]/IO53RSB4V0	MAC_RXD[1]/IO62RSB4V0
N2	VCCMSSIOB4	VCCMSSIOB4	VCCMSSIOB4
N3	VCC15A	VCC15A	VCC15A
N4	VCC33AP	VCC33AP	VCC33AP
N5	NC	ABPS3	ABPS3
N6	ADC4	TM1	TM1
N7	NC	GND33ADC0	GND33ADC0
N8	VCC33ADC0	VCC33ADC1	VCC33ADC1
N9	ADC8	ADC5	ADC5
N10	CM0	CM3	CM3
N11	GNDAQ	GNDAQ	GNDAQ
N12	VAREFOUT	VAREFOUT	VAREFOUT

Note: Shading denotes pins that do not have completely identical functions from density to density. For example, the bank assignment can be different for an I/O, or the function might be available only on a larger density device.

Pin No.	FG256		
	A2F060 Function	A2F200 Function	A2F500 Function
N13	NC	GNDSDD1	GNDSDD1
N14	NC	VCC33SDD1	VCC33SDD1
N15	GND	GND	GND
N16	SPI_0_DO/GPIO_16	SPI_0_DO/GPIO_16	SPI_0_DO/GPIO_16
P1	GNDSDD0	GNDSDD0	GNDSDD0
P2	VCC33SDD0	VCC33SDD0	VCC33SDD0
P3	VCC33N	VCC33N	VCC33N
P4	GNDA	GNDA	GNDA
P5	GNDAQ	GNDAQ	GNDAQ
P6	NC	CM1	CM1
P7	NC	ADC2	ADC2
P8	NC	VCC15ADC0	VCC15ADC0
P9	ADC9	ADC6	ADC6
P10	TM0	TM3	TM3
P11	GNDA	GNDA	GNDA
P12	VCCMAINXTAL	VCCMAINXTAL	VCCMAINXTAL
P13	GNDLPXTAL	GNDLPXTAL	GNDLPXTAL
P14	VDDBAT	VDDBAT	VDDBAT
P15	PTEM	PTEM	PTEM
P16	PTBASE	PTBASE	PTBASE
R1	PCAP	PCAP	PCAP
R2	SDD0	SDD0	SDD0
R3	ADC0	ABPS0	ABPS0
R4	ADC3	TM0	TM0
R5	NC	ABPS2	ABPS2
R6	NC	ADC1	ADC1
R7	NC	VCC33ADC0	VCC33ADC0
R8	VCC15ADC0	VCC15ADC1	VCC15ADC1
R9	ADC10	ADC7	ADC7
R10	ABPS1	ABPS7	ABPS7
R11	NC	ABPS4	ABPS4
R12	MAINXIN	MAINXIN	MAINXIN
R13	MAINXOUT	MAINXOUT	MAINXOUT
R14	LPXIN	LPXIN	LPXIN

Note: Shading denotes pins that do not have completely identical functions from density to density. For example, the bank assignment can be different for an I/O, or the function might be available only on a larger density device.

Pin No.	FG256		
	A2F060 Function	A2F200 Function	A2F500 Function
R15	LPXOUT	LPXOUT	LPXOUT
R16	VCC33A	VCC33A	VCC33A
T1	NCAP	NCAP	NCAP
T2	ADC1	ABPS1	ABPS1
T3	ADC2	CM0	CM0
T4	NC	GNDTM0	GNDTM0
T5	NC	ADC0	ADC0
T6	NC	VAREF0	VAREF0
T7	NC	GND33ADC0	GND33ADC0
T8	GND15ADC0	GND15ADC1	GND15ADC1
T9	VAREF0	VAREF1	VAREF1
T10	ABPS0	ABPS6	ABPS6
T11	NC	ABPS5	ABPS5
T12	NC	SDD1	SDD1
T13	GNDVAREF	GNDVAREF	GNDVAREF
T14	GNDMAINXTAL	GNDMAINXTAL	GNDMAINXTAL
T15	VCCLPXTAL	VCCLPXTAL	VCCLPXTAL
T16	PU_N	PU_N	PU_N

Note: Shading denotes pins that do not have completely identical functions from density to density. For example, the bank assignment can be different for an I/O, or the function might be available only on a larger density device.

FG484

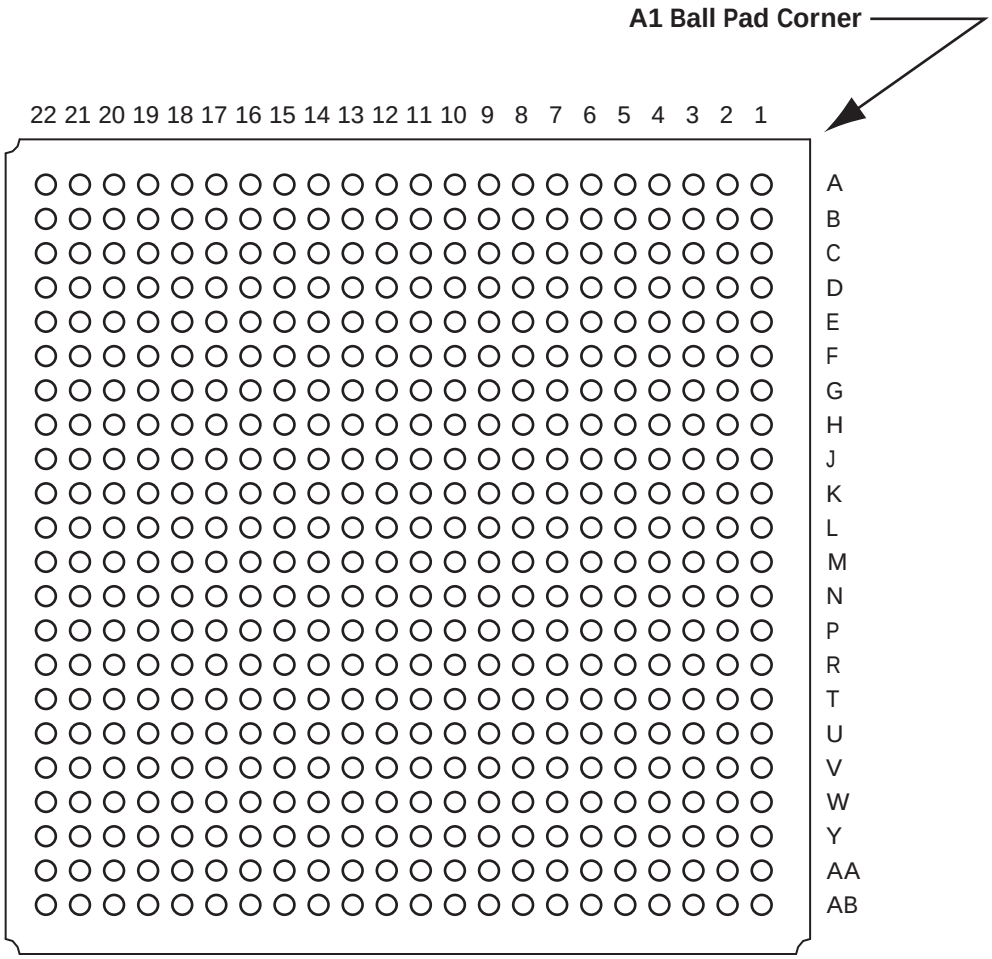

Note

For Package Manufacturing and Environmental information, visit the Resource Center at http://www.microsemi.com/soc/products/solutions/package/docs.aspx.

Pin Number	FG484	
	A2F200 Function	A2F500 Function
A1	GND	GND
A2	NC	NC
A3	NC	NC
A4	GND	GND
A5	EMC_CS0_N/GAB0/IO01NDB0V0	EMC_CS0_N/GAB0/IO05NDB0V0
A6	EMC_CS1_N/GAB1/IO01PDB0V0	EMC_CS1_N/GAB1/IO05PDB0V0
A7	GND	GND
A8	EMC_AB[0]/IO04NDB0V0	EMC_AB[0]/IO06NDB0V0
A9	EMC_AB[1]/IO04PDB0V0	EMC_AB[1]/IO06PDB0V0
A10	GND	GND
A11	NC	NC
A12	EMC_AB[7]/IO07PDB0V0	EMC_AB[7]/IO12PDB0V0
A13	GND	GND
A14	EMC_AB[12]/IO10NDB0V0	EMC_AB[12]/IO14NDB0V0
A15	EMC_AB[13]/IO10PDB0V0	EMC_AB[13]/IO14PDB0V0
A16	GND	GND
A17	NC	IO16NDB0V0
A18	NC	IO16PDB0V0
A19	GND	GND
A20	NC	NC
A21	NC	NC
A22	GND	GND
AA1	GPIO_4/IO43RSB4V0	GPIO_4/IO52RSB4V0
AA2	GPIO_12/IO37RSB4V0	GPIO_12/IO46RSB4V0
AA3	MAC_MDC/IO48RSB4V0	MAC_MDC/IO57RSB4V0
AA4	MAC_RXER/IO50RSB4V0	MAC_RXER/IO59RSB4V0
AA5	MAC_TXD[0]/IO56RSB4V0	MAC_TXD[0]/IO65RSB4V0
AA6	ABPS0	ABPS0
AA7	TM1	TM1
AA8	ADC1	ADC1
AA9	GND15ADC1	GND15ADC1
AA10	GND33ADC1	GND33ADC1
AA11	CM3	CM3
AA12	GNDTM1	GNDTM1
AA13	NC	ADC10
AA14	NC	ADC9

Note: Shading denotes pins that do not have completely identical functions from density to density. For example, the bank assignment can be different for an I/O, or the function might be available only on a larger density device.

Pin Number	FG484	
	A2F200 Function	A2F500 Function
AA15	NC	GND15ADC2
AA16	MAINXIN	MAINXIN
AA17	MAINXOUT	MAINXOUT
AA18	LPXIN	LPXIN
AA19	LPXOUT	LPXOUT
AA20	NC	NC
AA21	NC	NC
AA22	SPI_1_CLK/GPIO_26	SPI_1_CLK/GPIO_26
AB1	GND	GND
AB2	GPIO_13/IO36RSB4V0	GPIO_13/IO45RSB4V0
AB3	GPIO_14/IO35RSB4V0	GPIO_14/IO44RSB4V0
AB4	GND	GND
AB5	PCAP	PCAP
AB6	NCAP	NCAP
AB7	ABPS3	ABPS3
AB8	ADC3	ADC3
AB9	GND15ADC0	GND15ADC0
AB10	VCC33ADC1	VCC33ADC1
AB11	VAREF1	VAREF1
AB12	TM2	TM2
AB13	CM2	CM2
AB14	ABPS4	ABPS4
AB15	GNDAQ	GNDAQ
AB16	GNDMAINXTAL	GNDMAINXTAL
AB17	GNDLPXTAL	GNDLPXTAL
AB18	VCCLPXTAL	VCCLPXTAL
AB19	VDDBAT	VDDBAT
AB20	PTBASE	PTBASE
AB21	NC	NC
AB22	GND	GND
B1	EMC_DB[15]/GAA2/IO71PDB5V0	EMC_DB[15]/GAA2/IO88PDB5V0
B2	GND	GND
B3	NC	NC
B4	NC	NC
B5	VCCFPGAIOB0	VCCFPGAIOB0
B6	EMC_RW_N/GAA1/IO00PDB0V0	EMC_RW_N/GAA1/IO02PDB0V0

Note: Shading denotes pins that do not have completely identical functions from density to density. For example, the bank assignment can be different for an I/O, or the function might be available only on a larger density device.

Pin Number	FG484	
	A2F200 Function	A2F500 Function
B7	NC	IO04PPB0V0
B8	VCCFPGAIOB0	VCCFPGAIOB0
B9	EMC_BYTEN[0]/GAC0/IO02NDB0V0	EMC_BYTEN[0]/GAC0/IO07NDB0V0
B10	EMC_AB[2]/IO05NDB0V0	EMC_AB[2]/IO09NDB0V0
B11	EMC_AB[3]/IO05PDB0V0	EMC_AB[3]/IO09PDB0V0
B12	EMC_AB[6]/IO07NDB0V0	EMC_AB[6]/IO12NDB0V0
B13	EMC_AB[14]/IO11NDB0V0	EMC_AB[14]/IO15NDB0V0
B14	EMC_AB[15]/IO11PDB0V0	EMC_AB[15]/IO15PDB0V0
B15	VCCFPGAIOB0	VCCFPGAIOB0
B16	EMC_AB[18]/IO13NDB0V0	EMC_AB[18]/IO18NDB0V0
B17	EMC_AB[19]/IO13PDB0V0	EMC_AB[19]/IO18PDB0V0
B18	VCCFPGAIOB0	VCCFPGAIOB0
B19	GBB0/IO18NDB0V0	GBB0/IO24NDB0V0
B20	GBB1/IO18PDB0V0	GBB1/IO24PDB0V0
B21	GND	GND
B22	GBA2/IO20PDB1V0	GBA2/IO27PDB1V0
C1	EMC_DB[14]/GAB2/IO71NDB5V0	EMC_DB[14]/GAB2/IO88NDB5V0
C2	NC	NC
C3	NC	NC
C4	NC	IO01NDB0V0
C5	NC	IO01PDB0V0
C6	EMC_CLK/GAA0/IO00NDB0V0	EMC_CLK/GAA0/IO02NDB0V0
C7	NC	IO03PPB0V0
C8	NC	IO04NPB0V0
C9	EMC_BYTEN[1]/GAC1/IO02PDB0V0	EMC_BYTEN[1]/GAC1/IO07PDB0V0
C10	EMC_OEN1_N/IO03PDB0V0	EMC_OEN1_N/IO08PDB0V0
C11	GND	GND
C12	VCCFPGAIOB0	VCCFPGAIOB0
C13	EMC_AB[8]/IO08NDB0V0	EMC_AB[8]/IO13NDB0V0
C14	EMC_AB[16]/IO12NDB0V0	EMC_AB[16]/IO17NDB0V0
C15	EMC_AB[17]/IO12PDB0V0	EMC_AB[17]/IO17PDB0V0
C16	EMC_AB[24]/IO16NDB0V0	EMC_AB[24]/IO20NDB0V0
C17	EMC_AB[22]/IO15NDB0V0	EMC_AB[22]/IO19NDB0V0
C18	EMC_AB[23]/IO15PDB0V0	EMC_AB[23]/IO19PDB0V0
C19	GBA0/IO19NPB0V0	GBA0/IO23NPB0V0
C20	NC	NC

Note: Shading denotes pins that do not have completely identical functions from density to density. For example, the bank assignment can be different for an I/O, or the function might be available only on a larger density device.

Pin Number	FG484	
	A2F200 Function	A2F500 Function
C21	GBC2/IO21PDB1V0	GBC2/IO30PDB1V0
C22	GBB2/IO20NDB1V0	GBB2/IO27NDB1V0
D1	GND	GND
D2	EMC_DB[12]/IO70NDB5V0	EMC_DB[12]/IO87NDB5V0
D3	EMC_DB[13]/GAC2/IO70PDB5V0	EMC_DB[13]/GAC2/IO87PDB5V0
D4	NC	NC
D5	NC	NC
D6	GND	GND
D7	NC	IO00NPB0V0
D8	NC	IO03NPB0V0
D9	GND	GND
D10	EMC_OEN0_N/IO03NDB0V0	EMC_OEN0_N/IO08NDB0V0
D11	EMC_AB[10]/IO09NDB0V0	EMC_AB[10]/IO11NDB0V0
D12	EMC_AB[11]/IO09PDB0V0	EMC_AB[11]/IO11PDB0V0
D13	EMC_AB[9]/IO08PDB0V0	EMC_AB[9]/IO13PDB0V0
D14	GND	GND
D15	GBC1/IO17PPB0V0	GBC1/IO22PPB0V0
D16	EMC_AB[25]/IO16PDB0V0	EMC_AB[25]/IO20PDB0V0
D17	GND	GND
D18	GBA1/IO19PPB0V0	GBA1/IO23PPB0V0
D19	NC	NC
D20	NC	NC
D21	IO21NDB1V0	IO30NDB1V0
D22	GND	GND
E1	GFC2/IO67PPB5V0	GFC2/IO84PPB5V0
E2	VCCFPGAIOB5	VCCFPGAIOB5
E3	GFA2/IO68PDB5V0	GFA2/IO85PDB5V0
E4	GND	GND
E5	NC	NC
E6	GNDQ	GNDQ
E7	VCCFPGAIOB0	VCCFPGAIOB0
E8	NC	IO00PPB0V0
E9	NC	NC
E10	VCCFPGAIOB0	VCCFPGAIOB0
E11	EMC_AB[4]/IO06NDB0V0	EMC_AB[4]/IO10NDB0V0
E12	EMC_AB[5]/IO06PDB0V0	EMC_AB[5]/IO10PDB0V0

Note: Shading denotes pins that do not have completely identical functions from density to density. For example, the bank assignment can be different for an I/O, or the function might be available only on a larger density device.

Pin Number	FG484	
	A2F200 Function	A2F500 Function
E13	VCCFPGAIOB0	VCCFPGAIOB0
E14	GBC0/IO17NPB0V0	GBC0/IO22NPB0V0
E15	NC	NC
E16	VCCFPGAIOB0	VCCFPGAIOB0
E17	NC	VCOMPLA1
E18	NC	IO25NPB1V0
E19	GND	GND
E20	NC	NC
E21	VCCFPGAIOB1	VCCFPGAIOB1
E22	IO22NDB1V0	IO32NDB1V0
F1	GFB1/IO65PPB5V0	GFB1/IO82PPB5V0
F2	IO67NPB5V0	IO84NPB5V0
F3	GFB2/IO68NDB5V0	GFB2/IO85NDB5V0
F4	EMC_DB[10]/IO69NPB5V0	EMC_DB[10]/IO86NPB5V0
F5	VCCFPGAIOB5	VCCFPGAIOB5
F6	VCCPLL	VCCPLL0
F7	VCOMPLA	VCOMPLA0
F8	NC	NC
F9	NC	NC
F10	NC	NC
F11	NC	NC
F12	NC	NC
F13	EMC_AB[20]/IO14NDB0V0	EMC_AB[20]/IO21NDB0V0
F14	EMC_AB[21]/IO14PDB0V0	EMC_AB[21]/IO21PDB0V0
F15	GNDQ	GNDQ
F16	NC	VCCPLL1
F17	NC	IO25PPB1V0
F18	VCCFPGAIOB1	VCCFPGAIOB1
F19	IO23NDB1V0	IO28NDB1V0
F20	NC	IO31PDB1V0
F21	NC	IO31NDB1V0
F22	IO22PDB1V0	IO32PDB1V0
G1	GND	GND
G2	GFB0/IO65NPB5V0	GFB0/IO82NPB5V0
G3	EMC_DB[9]/GEC1/IO63PDB5V0	EMC_DB[9]/GEC1/IO80PDB5V0
G4	GFC1/IO66PPB5V0	GFC1/IO83PPB5V0

Note: Shading denotes pins that do not have completely identical functions from density to density. For example, the bank assignment can be different for an I/O, or the function might be available only on a larger density device.

Pin Number	FG484	
	A2F200 Function	A2F500 Function
G5	EMC_DB[11]/IO69PPB5V0	EMC_DB[11]/IO86PPB5V0
G6	GNDQ	GNDQ
G7	NC	NC
G8	GND	GND
G9	VCCFPGAIOB0	VCCFPGAIOB0
G10	GND	GND
G11	VCCFPGAIOB0	VCCFPGAIOB0
G12	GND	GND
G13	VCCFPGAIOB0	VCCFPGAIOB0
G14	GND	GND
G15	VCCFPGAIOB0	VCCFPGAIOB0
G16	GNDQ	GNDQ
G17	NC	IO26PDB1V0
G18	NC	IO26NDB1V0
G19	GCA2/IO23PDB1V0	GCA2/IO28PDB1V0
G20	IO24NDB1V0	IO33NDB1V0
G21	GCB2/IO24PDB1V0	GCB2/IO33PDB1V0
G22	GND	GND
H1	EMC_DB[7]/GEB1/IO62PDB5V0	EMC_DB[7]/GEB1/IO79PDB5V0
H2	VCCFPGAIOB5	VCCFPGAIOB5
H3	EMC_DB[8]/GEC0/IO63NDB5V0	EMC_DB[8]/GEC0/IO80NDB5V0
H4	GND	GND
H5	GFC0/IO66NPB5V0	GFC0/IO83NPB5V0
H6	GFA1/IO64PDB5V0	GFA1/IO81PDB5V0
H7	GND	GND
H8	VCC	VCC
H9	GND	GND
H10	VCC	VCC
H11	GND	GND
H12	VCC	VCC
H13	GND	GND
H14	VCC	VCC
H15	GND	GND
H16	VCCFPGAIOB1	VCCFPGAIOB1
H17	IO25NDB1V0	IO29NDB1V0
H18	GCC2/IO25PDB1V0	GCC2/IO29PDB1V0

Note: Shading denotes pins that do not have completely identical functions from density to density. For example, the bank assignment can be different for an I/O, or the function might be available only on a larger density device.

Pin Number	FG484	
	A2F200 Function	A2F500 Function
H19	GND	GND
H20	GCC0/IO26NPB1V0	GCC0/IO35NPB1V0
H21	VCCFPGAIOB1	VCCFPGAIOB1
H22	GCB0/IO27NDB1V0	GCB0/IO34NDB1V0
J1	EMC_DB[6]/GEB0/IO62NDB5V0	EMC_DB[6]/GEB0/IO79NDB5V0
J2	EMC_DB[5]/GEA1/IO61PDB5V0	EMC_DB[5]/GEA1/IO78PDB5V0
J3	EMC_DB[4]/GEA0/IO61NDB5V0	EMC_DB[4]/GEA0/IO78NDB5V0
J4	EMC_DB[3]/GEC2/IO60PPB5V0	EMC_DB[3]/GEC2/IO77PPB5V0
J5	VCCFPGAIOB5	VCCFPGAIOB5
J6	GFA0/IO64NDB5V0	GFA0/IO81NDB5V0
J7	VCCFPGAIOB5	VCCFPGAIOB5
J8	GND	GND
J9	VCC	VCC
J10	GND	GND
J11	VCC	VCC
J12	GND	GND
J13	VCC	VCC
J14	GND	GND
J15	VCC	VCC
J16	GND	GND
J17	NC	IO37PDB1V0
J18	VCCFPGAIOB1	VCCFPGAIOB1
J19	GCA0/IO28NDB1V0	GCA0/IO36NDB1V0
J20	GCA1/IO28PDB1V0	GCA1/IO36PDB1V0
J21	GCC1/IO26PPB1V0	GCC1/IO35PPB1V0
J22	GCB1/IO27PDB1V0	GCB1/IO34PDB1V0
K1	GND	GND
K2	EMC_DB[0]/GEA2/IO59NDB5V0	EMC_DB[0]/GEA2/IO76NDB5V0
K3	EMC_DB[1]/GEB2/IO59PDB5V0	EMC_DB[1]/GEB2/IO76PDB5V0
K4	NC	IO74PPB5V0
K5	EMC_DB[2]/IO60NPB5V0	EMC_DB[2]/IO77NPB5V0
K6	NC	IO75PDB5V0
K7	GND	GND
K8	VCC	VCC
K9	GND	GND
K10	VCC	VCC

Note: Shading denotes pins that do not have completely identical functions from density to density. For example, the bank assignment can be different for an I/O, or the function might be available only on a larger density device.

Pin Number	FG484	
	A2F200 Function	A2F500 Function
K11	GND	GND
K12	VCC	VCC
K13	GND	GND
K14	VCC	VCC
K15	GND	GND
K16	VCCFPGAIOB1	VCCFPGAIOB1
K17	NC	IO37NDB1V0
K18	GDA1/IO31PDB1V0	GDA1/IO40PDB1V0
K19	GDA0/IO31NDB1V0	GDA0/IO40NDB1V0
K20	GDC1/IO29PDB1V0	GDC1/IO38PDB1V0
K21	GDC0/IO29NDB1V0	GDC0/IO38NDB1V0
K22	GND	GND
L1	NC	IO73PDB5V0
L2	NC	IO73NDB5V0
L3	NC	IO72PPB5V0
L4	GND	GND
L5	NC	IO74NPB5V0
L6	NC	IO75NDB5V0
L7	VCCFPGAIOB5	VCCFPGAIOB5
L8	GND	GND
L9	VCC	VCC
L10	GND	GND
L11	VCC	VCC
L12	GND	GND
L13	VCC	VCC
L14	GND	GND
L15	VCC	VCC
L16	GND	GND
L17	GNDQ	GNDQ
L18	GDA2/IO33NDB1V0	GDA2/IO42NDB1V0
L19	VCCFPGAIOB1	VCCFPGAIOB1
L20	GDB1/IO30PDB1V0	GDB1/IO39PDB1V0
L21	GDB0/IO30NDB1V0	GDB0/IO39NDB1V0
L22	GDC2/IO32PDB1V0	GDC2/IO41PDB1V0
M1	NC	IO71PDB5V0
M2	NC	IO71NDB5V0

Note: Shading denotes pins that do not have completely identical functions from density to density. For example, the bank assignment can be different for an I/O, or the function might be available only on a larger density device.

Pin Number	FG484	
	A2F200 Function	A2F500 Function
M3	VCCFPGAIOB5	VCCFPGAIOB5
M4	NC	IO72NPB5V0
M5	GNDQ	GNDQ
M6	NC	IO68PDB5V0
M7	GND	GND
M8	VCC	VCC
M9	GND	GND
M10	VCC	VCC
M11	GND	GND
M12	VCC	VCC
M13	GND	GND
M14	VCC	VCC
M15	GND	GND
M16	VCCFPGAIOB1	VCCFPGAIOB1
M17	NC	NC
M18	GDB2/IO33PDB1V0	GDB2/IO42PDB1V0
M19	VJTAG	VJTAG
M20	GND	GND
M21	VPP	VPP
M22	IO32NDB1V0	IO41NDB1V0
N1	GND	GND
N2	NC	IO70PDB5V0
N3	NC	IO70NDB5V0
N4	VCCRCOSC	VCCRCOSC
N5	VCCFPGAIOB5	VCCFPGAIOB5
N6	NC	IO68NDB5V0
N7	VCCFPGAIOB5	VCCFPGAIOB5
N8	GND	GND
N9	VCC	VCC
N10	GND	GND
N11	VCC	VCC
N12	GND	GND
N13	VCC	VCC
N14	GND	GND
N15	VCC	VCC
N16	NC	GND

Note: Shading denotes pins that do not have completely identical functions from density to density. For example, the bank assignment can be different for an I/O, or the function might be available only on a larger density device.

Pin Number	FG484	
	A2F200 Function	A2F500 Function
N17	NC	NC
N18	VCCFPGAIOB1	VCCFPGAIOB1
N19	VCCENVM	VCCENVM
N20	GNDENVM	GNDENVM
N21	NC	NC
N22	GND	GND
P1	NC	IO69NDB5V0
P2	NC	IO69PDB5V0
P3	GNDRCOSC	GNDRCOSC
P4	GND	GND
P5	NC	NC
P6	NC	NC
P7	GND	GND
P8	VCC	VCC
P9	GND	GND
P10	VCC	VCC
P11	GND	GND
P12	VCC	VCC
P13	GND	GND
P14	VCC	VCC
P15	GND	GND
P16	VCCFPGAIOB1	VCCFPGAIOB1
P17	TDI	TDI
P18	TCK	TCK
P19	GND	GND
P20	TMS	TMS
P21	TDO	TDO
P22	TRSTB	TRSTB
R1	MSS_RESET_N	MSS_RESET_N
R2	VCCFPGAIOB5	VCCFPGAIOB5
R3	GPIO_1/IO46RSB4V0	GPIO_1/IO55RSB4V0
R4	NC	NC
R5	NC	NC
R6	NC	NC
R7	NC	NC
R8	GND	GND

Note: Shading denotes pins that do not have completely identical functions from density to density. For example, the bank assignment can be different for an I/O, or the function might be available only on a larger density device.

Pin Number	FG484	
	A2F200 Function	A2F500 Function
R9	VCC	VCC
R10	GND	GND
R11	VCC	VCC
R12	GND	GND
R13	VCC	VCC
R14	GND	GND
R15	VCC	VCC
R16	JTAGSEL	JTAGSEL
R17	NC	NC
R18	NC	NC
R19	NC	NC
R20	NC	NC
R21	VCCFPGAIOB1	VCCFPGAIOB1
R22	NC	NC
T1	GND	GND
T2	VCCMSSIOB4	VCCMSSIOB4
T3	GPIO_8/IO39RSB4V0	GPIO_8/IO48RSB4V0
T4	GPIO_11/IO57RSB4V0	GPIO_11/IO66RSB4V0
T5	GND	GND
T6	MAC_CLK	MAC_CLK
T7	VCCMSSIOB4	VCCMSSIOB4
T8	VCC33SDD0	VCC33SDD0
T9	VCC15A	VCC15A
T10	GNDAQ	GNDAQ
T11	GND33ADC0	GND33ADC0
T12	ADC7	ADC7
T13	NC	TM4
T14	NC	VAREF2
T15	VAREFOUT	VAREFOUT
T16	VCCMSSIOB2	VCCMSSIOB2
T17	SPI_1_DO/GPIO_24	SPI_1_DO/GPIO_24
T18	GND	GND
T19	NC	NC
T20	NC	NC
T21	VCCMSSIOB2	VCCMSSIOB2
T22	GND	GND

Note: Shading denotes pins that do not have completely identical functions from density to density. For example, the bank assignment can be different for an I/O, or the function might be available only on a larger density device.

Pin Number	FG484	
	A2F200 Function	A2F500 Function
U1	GND	GND
U2	GPIO_5/IO42RSB4V0	GPIO_5/IO51RSB4V0
U3	GPIO_10/IO58RSB4V0	GPIO_10/IO67RSB4V0
U4	VCCMSSIOB4	VCCMSSIOB4
U5	MAC_RXD[1]/IO53RSB4V0	MAC_RXD[1]/IO62RSB4V0
U6	NC	NC
U7	VCC33AP	VCC33AP
U8	VCC33N	VCC33N
U9	CM1	CM1
U10	VAREF0	VAREF0
U11	GND33ADC1	GND33ADC1
U12	ADC4	ADC4
U13	NC	GNDTM2
U14	NC	ADC11
U15	GNDVAREF	GNDVAREF
U16	VCC33SDD1	VCC33SDD1
U17	SPI_0_DO/GPIO_16	SPI_0_DO/GPIO_16
U18	UART_0_RXD/GPIO_21	UART_0_RXD/GPIO_21
U19	VCCMSSIOB2	VCCMSSIOB2
U20	I2C_1_SCL/GPIO_31	I2C_1_SCL/GPIO_31
U21	I2C_0_SCL/GPIO_23	I2C_0_SCL/GPIO_23
U22	GND	GND
V1	GPIO_0/IO47RSB4V0	GPIO_0/IO56RSB4V0
V2	GPIO_6/IO41RSB4V0	GPIO_6/IO50RSB4V0
V3	GPIO_9/IO38RSB4V0	GPIO_9/IO47RSB4V0
V4	MAC_MDIO/IO49RSB4V0	MAC_MDIO/IO58RSB4V0
V5	MAC_RXD[0]/IO54RSB4V0	MAC_RXD[0]/IO63RSB4V0
V6	GND	GND
V7	SDD0	SDD0
V8	ABPS1	ABPS1
V9	ADC2	ADC2
V10	VCC33ADC0	VCC33ADC0
V11	ADC6	ADC6
V12	ADC5	ADC5
V13	ABPS5	ABPS5
V14	NC	ADC8

Note: Shading denotes pins that do not have completely identical functions from density to density. For example, the bank assignment can be different for an I/O, or the function might be available only on a larger density device.

Pin Number	FG484	
	A2F200 Function	A2F500 Function
V15	NC	GND33ADC2
V16	NC	NC
V17	GND	GND
V18	SPI_0_DI/GPIO_17	SPI_0_DI/GPIO_17
V19	SPI_1_DI/GPIO_25	SPI_1_DI/GPIO_25
V20	UART_1_TXD/GPIO_28	UART_1_TXD/GPIO_28
V21	I2C_0_SDA/GPIO_22	I2C_0_SDA/GPIO_22
V22	I2C_1_SDA/GPIO_30	I2C_1_SDA/GPIO_30
W1	GPIO_2/IO45RSB4V0	GPIO_2/IO54RSB4V0
W2	GPIO_7/IO40RSB4V0	GPIO_7/IO49RSB4V0
W3	GND	GND
W4	MAC_CRSDV/IO51RSB4V0	MAC_CRSDV/IO60RSB4V0
W5	MAC_TXD[1]/IO55RSB4V0	MAC_TXD[1]/IO64RSB4V0
W6	NC	SDD2
W7	GNDA	GNDA
W8	TM0	TM0
W9	ABPS2	ABPS2
W10	GND33ADC0	GND33ADC0
W11	VCC15ADC1	VCC15ADC1
W12	ABPS6	ABPS6
W13	NC	CM4
W14	NC	ABPS9
W15	NC	VCC33ADC2
W16	GNDA	GNDA
W17	PU_N	PU_N
W18	GNDSDD1	GNDSDD1
W19	SPI_0_CLK/GPIO_18	SPI_0_CLK/GPIO_18
W20	GND	GND
W21	SPI_1_SS/GPIO_27	SPI_1_SS/GPIO_27
W22	UART_1_RXD/GPIO_29	UART_1_RXD/GPIO_29
Y1	GPIO_3/IO44RSB4V0	GPIO_3/IO53RSB4V0
Y2	VCCMSSIOB4	VCCMSSIOB4
Y3	GPIO_15/IO34RSB4V0	GPIO_15/IO43RSB4V0
Y4	MAC_TXEN/IO52RSB4V0	MAC_TXEN/IO61RSB4V0
Y5	VCCMSSIOB4	VCCMSSIOB4
Y6	GNDSDD0	GNDSDD0

Note: Shading denotes pins that do not have completely identical functions from density to density. For example, the bank assignment can be different for an I/O, or the function might be available only on a larger density device.

Pin Number	FG484	
	A2F200 Function	A2F500 Function
Y7	CM0	CM0
Y8	GNDTM0	GNDTM0
Y9	ADC0	ADC0
Y10	VCC15ADC0	VCC15ADC0
Y11	ABPS7	ABPS7
Y12	TM3	TM3
Y13	NC	ABPS8
Y14	NC	GND33ADC2
Y15	NC	VCC15ADC2
Y16	VCCMAINXTAL	VCCMAINXTAL
Y17	SDD1	SDD1
Y18	PTEM	PTEM
Y19	VCC33A	VCC33A
Y20	SPI_0_SS/GPIO_19	SPI_0_SS/GPIO_19
Y21	VCCMSSIOB2	VCCMSSIOB2
Y22	UART_0_TXD/GPIO_20	UART_0_TXD/GPIO_20

Note: Shading denotes pins that do not have completely identical functions from density to density. For example, the bank assignment can be different for an I/O, or the function might be available only on a larger density device.

6 – Datasheet Information

List of Changes

The following table lists critical changes that were made in each revision of the SmartFusion datasheet.

Revision	Changes	Page
Revision 10 (January 2013)	The "SmartFusion cSoC Family Product Table" section has been updated to specify that External Memory Controller support for A2F060-TQ144 is not available (SAR 41555).	II
	The following Note was added to the "Package I/Os: MSS + FPGA I/Os" table (SAR 41027): "There are no LVTTL capable direct inputs available on A2F060 devices."	III
	The "Product Ordering Codes" section has been updated to mention "Y" as "Blank" mentioning "Device Does Not Include License to Implement IP Based on the Cryptography Research, Inc. (CRI) Patent Portfolio" (SAR 43218).	VI
	Added a note to Table 2-3 • Recommended Operating Conditions5,6 (SAR 43428): The programming temperature range supported is $T_{ambient}$ = 0°C to 85°C.	2-3
	Statements about the state of the I/Os during programming were updated in the following sections: "I/O Power-Up and Supply Voltage Thresholds for Power-On Reset (Commercial and Industrial)" and "User I/O Naming Conventions" (SAR 43380).	2-4, 5-7
	In Table 2-4 • FPGA and Embedded Flash Programming, Storage and Operating Limits, the upper value of temperature ranges was corrected from "Min." to "Max." (SAR 41826).	2-4
	Information for A2F200M3F-CS288 was added to Table 2-6 • Package Thermal Resistance. The die size column was removed (SARs 41828, 42168). Also added details for A2F200M3F-PQG208I (SAR 35728).	2-7
	Added the following note to Table 2-65 • LVDS and Table 2-68 • LVPECL: "The above mentioned timing parameters correspond to 24mA drive strength." (SAR 43457)	2-41, 2-43
	The note in Table 2-86 • SmartFusion CCC/PLL Specification referring the reader to SmartGen was revised to refer instead to the online help associated with the core (SAR 34816).	2-63
	The SRAM collision data in Table 2-87 • RAM4K9 and Table 2-88 • RAM512X18 was updated (SAR 38583).	2-69, 2-70
	The maximum input bias current for comparators 1, 3, 5, 7, and 9, in Table 2-98 • Comparator Performance Specifications, was revised from 60 to 100 nA (SAR 36008).	2-84
	Corrected the Start-up time unit from "ms" to "µs" in Table 2-100 • Voltage Regulator (SAR 39395).	2-87
	Added the "References" section for "SmartFusion Development Tools" (SAR 43460).	3-6
	Updated the "References" section for Programming (SAR 43304). Added the "Application Notes on IAP Programming Technique" section (SAR 43458).	4-9

Revision	Changes	Page
Revision 10 (continued)	A note was added to the "Supply Pins" table, referring to the *SmartFusion cSoC Board Design Guidelines* application note for details on VCCPLLx capacitor recommendations (SAR 42183).	5-1
	In the "Supply Pins" section, the VPP capacitor value section has been modified to: "For proper programming, 0.01µF, and 0.1µF to 1µF capacitors, (both rated at 16 V) are to be connected in parallel across VPP and GND, and positioned as close to the FPGA pins as possible." (SAR 43569).	5-1
	In the "User Pins" section, added description 'These pins are located in Bank-2 (GPIO_16 to GPIO_31) for A2F060, A2F200, and A2F500 devices.' for GPIO_x (SAR 28595).	5-6
	Updated the MAINXIN and MAINXOUT pin descriptions in the "Special Function Pins" section to read "If an external RC network or clock input is used, the RC components are connected to the MAINXIN pin, with MAINXOUT left floating. When the main crystal oscillator is not being used, MAINXIN and MAINXOUT pins can be left floating." (SAR 42807).	5-8
	Live at Power-Up (LAPU) has been replaced with 'Instant On'.	NA
Revision 9 (September 2012)	The number of signal conditioning blocks (SCBs) for A2F500 in the "SmartFusion cSoC Family Product Table" was corrected to 4. Previously it had incorrectly been listed as 2 (SAR 39536).	II
	The "Product Ordering Codes" section was revised to clarify that only one eNVM size for each device is currently available (SAR 40333).	VI
	Information pertaining to analog I/Os was added to the "Specifying I/O States During Programming" section on page 1-3 (SAR 34836).	1-3
	The formulas in the table notes for Table 2-29 • I/O Weak Pull-Up/Pull-Down Resistances were corrected (SAR 34757).	2-27
	Maximum values for VIL and VIH were corrected in LVPECL Table 2-66 • Minimum and Maximum DC Input and Output Levels (SAR 37695).	2-43
	Minimum pulse width High and Low values were added to the tables in the "Global Tree Timing Characteristics" section. The maximum frequency for global clock parameter was removed from these tables because a frequency on the global is only an indication of what the global network can do. There are other limiters such as the SRAM, I/Os, and PLL. SmartTime software should be used to determine the design frequency (SAR 29270).	2-59
	The temperature range for accuracy in Table 2-83 • Electrical Characteristics of the RC Oscillator was changed from "0°C to 85°C" to "–40°C to 100°C" (SAR 33670). The units for jitter were changed from ps to ps RMS (SAR 34270).	2-61
	In Table 2-84 • Electrical Characteristics of the Main Crystal Oscillator, the output jitter for the 10 MHz crystal was corrected from 50 ps RMS to 1 ns RS (SAR 32939). Values for the startup time of VILXTAL were added (SAR 25248).	2-62
	In Table 2-85 • Electrical Characteristics of the Low Power Oscillator, output jitter was changed from 50 ps RMS to 30 ps RMS (SAR 32939). A value for ISTBXTAL standby current was added (SAR 25249). Startup time for a test load of 30 pF was added (SAR 27436).	2-62

Revision	Changes	Page
Revision 9 (continued)	The following note was added to Table 2-86 • SmartFusion CCC/PLL Specification in regard to delay increments in programmable delay blocks (SAR 34816): "When the CCC/PLL core is generated by Microsemi core generator software, not all delay values of the specified delay increments are available. Refer to SmartGen online help for more information."	2-63
	Figure 2-36 • FIFO Read and Figure 2-37 • FIFO Write have been added (SAR 34851).	2-72
	Information regarding the MSS resetting itself after IAP of the FPGA fabric was added to the "Reprogramming the FPGA Fabric Using the Cortex-M3" section (SAR 37970).	4-8
	Instructions for unused VCC33ADCx pins were revised in "Supply Pins" (SAR 41137).	5-1
	Libero IDE was changed to Libero SoC throughout the document (SAR 40264).	N/A
Revision 8 (March 2012)	In the "Analog Front-End (AFE)" section, the resolution for the first-order sigma delta DAC was corrected from 12-bit to "8-bit, 16-bit, or 24-bit." The same correction was made in the "SmartFusion cSoC Family Product Table" (SAR 36541).	I, II
	The "SmartFusion cSoC Family Product Table" was revised to break out the features by package as well as device. The table now indicates that only one SPI is available for the PQ208 package in A2F200 and A2F500, and in the TQ144 package for A2F060 (SAR 33477). The EMC address bus size has been corrected to 26 bits (SAR 35664).	II
	The "SmartFusion cSoC Device Status" table was revised to change the CS288 package for A2F200 and A2F500 from preliminary to production status (SAR 37811).	III
	TQ144 package information for A2F060 was added to the "Package I/Os: MSS + FPGA I/Os" table, "SmartFusion cSoC Device Status" table, "Product Ordering Codes", and "Temperature Grade Offerings" table (SAR 36246).	III, VI
	Table 1 • SmartFusion cSoC Package Sizes Dimensions is new (SAR 31178).	III
	The Halogen-Free Packaging code (H) was removed from the "Product Ordering Codes" table (SAR 34017).	VI
	The "Specifying I/O States During Programming" section is new (SAR 34836).	1-3
	The reference to guidelines for global spines and VersaTile rows, given in the "Global Clock Dynamic Contribution—PCLOCK" section, was corrected to the "Device Architecture" chapter in the *SmartFusion FPGA Fabric User's Guide* (SAR 34742).	2-15
	The AC Loading figures in the "Single-Ended I/O Characteristics" section were updated to match tables in the "Summary of I/O Timing Characteristics – Default I/O Software Settings" section (SAR 34891).	2-30, 2-24
	The following sentence was deleted from the "2.5 V LVCMOS" section (SAR 34799): "It uses a 5 V–tolerant input buffer and push-pull output buffer."	2-32
	In the SRAM "Timing Characteristics" tables, reference was made to a new application note, *Simultaneous Read-Write Operations in Dual-Port SRAM for Flash-Based cSoCs and FPGAs*, which covers these cases in detail (SAR 34874).	2-69
	The note for Table 2-93 • Current Monitor Performance Specification was modified to include the statement that the restriction on the TM pad being no greater than 10 mV above the CM pad.is applicable only if current monitor is used (SAR 26373).	2-77
	The unit "FR" in Table 2-97 • ABPS Performance Specifications and Table 2-99 • Analog Sigma-Delta DAC, used to designate full-scale error, was changed to "FS" and clarified with a table note (SAR 35342).	2-82, 2-85

Revision	Changes	Page
Revision 8 (continued)	The description of "In-application programming (IAP)" methodology was changed to state the difference for A2F060 and A2F500 compared to A2F200 (SAR 37808).	4-7
	The "Global I/O Naming Conventions" section is new (SARs 28996, 31147). The description for IO "User Pins" was revised accordingly and moved out of the table and into a new section: "User I/O Naming Conventions".	5-6, 5-6
	The descriptions for "MAINXIN" and "MAINXOUT" were revised to state how they should be handled if using an external RC network or clock input (SAR 32594).	5-8
	The description and type was revised for the "MSS_RESET_N" pin (SAR 34133).	5-9
	The "TQ144" section and pin table for A2F060 are new (SAR 36246).	5-18
Revision 7 (August 2011)	The title of the datasheet was changed from SmartFusion Intelligent Mixed Signal FPGAs to SmartFusion Customizable System-on-Chip (cSoC). Terminology throughout was changed accordingly. The term cSoC defines a category of devices that include at least FPGA fabric and a processor subsystem of some sort. It can also include any of the following: analog, SerDes, ASIC blocks, customer specific IP, or application-specific IP. SmartFusion is Microsemi's first cSoC (SAR 33071).	N/A
	The "SmartFusion cSoC Family Product Table" was revised to remove the note stating that the A2F060 device is under definition and subject to change (SAR 33070). A note was added for EMC, stating that it is not available on A2F500 for the PQ208 package (SAR 33041).	II
	The "SmartFusion cSoC Device Status" table was revised. The status for A2F060 CS288 and FG256 moved from Advance to Preliminary. A2F200 PQ208 and A2F500 PQ208 moved from Advance to Production (SAR 33069).	III
	The "Package I/Os: MSS + FPGA I/Os" table was revised. The number of direct analog inputs for A2F060 packages increased from 6 to 11. The number of MSS I/Os for the A2F060 FG256 package increased from 25 to 26 (SAR 33070). A note was added stating that EMC is not available for the A2F500 PQ208 package (SAR 33041).	III
	The note associated with the "SmartFusion cSoC System Architecture" diagram was corrected from "Architecture for A2F500" to "Architecture for A2F200" (SAR 32578).	V
	The Licensed DPA Logo was added to the "Product Ordering Codes" section. The trademarked Licensed DPA Logo identifies that a product is covered by a DPA counter-measures license from Cryptography Research (SAR 32151).	VI
	The "Security" section and "Secure Programming" section were updated to clarify that although no existing security measures can give an absolute guarantee, SmartFusion cSoCs implement the best security available in the industry (SAR 32865).	1-2, 4-9
	Storage temperature, T_{STG}, and junction temperature, T_J, were added to Table 2-1 • Absolute Maximum Ratings (SAR 30863).	2-1
	AC/DC characteristics for A2F060 were added to the "SmartFusion DC and Switching Characteristics" chapter (SAR 33132). The following tables were updated:	
	Table 2-14 • Different Components Contributing to Dynamic Power Consumption in SmartFusion cSoCs	2-12
	Table 2-15 • Different Components Contributing to the Static Power Consumption in SmartFusion cSoCs	2-13
	Table 2-90 • eNVM Block Timing, Worst Commercial Case Conditions: TJ = 85°C, VCC = 1.425 V	2-75
	Table 2-99 • Analog Sigma-Delta DAC	2-85
	Table 2-101 • SPI Characteristics	2-89

Revision	Changes	Page
Revision 7 (continued)	The following sentence was removed from the "I/O Power-Up and Supply Voltage Thresholds for Power-On Reset (Commercial and Industrial)" section because it is incorrect (SAR 31047): "The many different supplies can power up in any sequence with minimized current spikes or surges."	2-4
	Table 2-8 • Quiescent Supply Current Characteristics was divided into two tables: one for power supplies configurations and one for quiescent supply current. SoC mode was added to both tables (SAR 26378) and VCOMPLAx was removed from Table 2-8 • Power Supplies Configuration (SAR 29591). Quiescent supply current values were updated in Table 2-9 • Quiescent Supply Current Characteristics (SAR 33067).	2-10
	The "Total Static Power Consumption—PSTAT" section was revised: "$N_{eNVM-BLOCKS}$ * P_{DC4}" was removed from the equation for P_{STAT} (SAR 33067).	2-14
	Table 2-14 • Different Components Contributing to Dynamic Power Consumption in SmartFusion cSoCs and Table 2-15 • Different Components Contributing to the Static Power Consumption in SmartFusion cSoCs were revised to reflect updates in the SmartFusion power calculator (SARs 26405, 33067).	2-12, 2-13
	Table 2-82 • A2F060 Global Resource is new (SAR 33132).	2-61
	Output duty cycle was corrected to 50% in Table 2-83 • Electrical Characteristics of the RC Oscillator. It was incorrectly noted as 1% previously. Operating current for 3.3 domain was added (SAR 32940).	2-61
	Table 2-86 • SmartFusion CCC/PLL Specification was revised to add information and measurements regarding CCC output peak-to-peak period jitter (SAR 32996).	2-63
	The port names in the SRAM "Timing Waveforms", SRAM "Timing Characteristics" tables, Figure 2-38 • FIFO Reset, and the FIFO "Timing Waveforms" tables were revised to ensure consistency with the software names (SAR 29991).	2-66 to 2-75
	Table 2-90 • eNVM Block Timing, Worst Commercial Case Conditions: TJ = 85°C, VCC = 1.425 V was revised to correct the maximum frequencies (SAR 32410).	2-75
	Table 2-96 • VAREF Stabilization Time was moved to the "SmartFusion DC and Switching Characteristics" section from the SmartFusion Programmable Analog User's Guide because the information is extracted from characterization (SAR 24298).	2-81
	The hysteresis section in Table 2-98 • Comparator Performance Specifications was revised (SAR 33158).	2-84
	The "SmartFusion Development Tools" was extensively updated (SAR 33216).	3-1
	The text following Table 4-2 • JTAG Pin Descriptions was updated to add information on control of the JTAGSEL pin. Manual jumpers on the evaluation and development kits allow manual selection of this function for J-Link and ULINK debuggers (SAR 25592).	4-7

Revision	Changes	Page
Revision 7 (continued)	Usage instructions, such as how to handle the pin when unused, were added for the following supply pins (SAR 29769): "VCC15A" "VCC15ADC0" through "VCC15ADC2" "VCC33ADC0" through "VCC33ADC2" "VCC33AP" "VCC33ADC2" "VCCLPXTAL" "VCCMAINXTAL" "VCCMSSIOB2" "VCCPLLx" "VCCRCOSC" "VDDBAT"	5-2 through 5-3
	The "IO" description was revised to clarify the definitions of u, I/O pair, and w, differential pair (SAR 31147). Information on configuration of unused I/Os (including unused MSS I/Os, SAR 26891) was added (SAR 32643).	5-6
	Usage instructions were added for the following pins (SAR 29769): "MSS_RESET_N" "TCK" "TMS" "TRSTB" "MAC_CLK"	5-9 through 5-13
	Package names used in the "Pin Assignment Tables" section were revised to match standards given in *Package Mechanical Drawings* (SAR 27395).	5-18
	The pin assignments for A2F060 for "TQ144" and "FG256" have been revised due to the device status change from advance to preliminary (SAR 33068). The "TQ144" and "FG256" pin assignment sections previously compared functions between A2F060/A2F200 devices in one table and A2F200/A2F500 in a separate table. Functions for all three devices have now been combined into one table for each package (SAR 33072).	5-18, 5-39
	The "PQ208" pin table was revised for A2F500 to remove EMC functions, which are not available for this device/package combination (SAR 33041).	5-32
Revision 6 (March 2011)	The "PQ208" package was added to product tables and "Product Ordering Codes" for A2F200 and A2F500 (SAR 31005).	III
	The "Package I/Os: MSS + FPGA I/Os" table was revised to add the CS288 package for A2F060 and the PQ208 package for A2F200 and A2F500. A row was added for shared analog inputs (SAR 31034).	III
	The "SmartFusion cSoC Device Status" table was updated (SAR 31084).	III
	VCCESRAM was added to Table 2-1 • Absolute Maximum Ratings, Table 2-3 • Recommended Operating Conditions5,6, Table 2-8 • Power Supplies Configuration, and the "Supply Pins" table (SAR 31035).	2-1, 2-3, 2-10, 5-1
	The following note was removed from Table 2-8 • Power Supplies Configuration (SAR 30984): "Current monitors and temperature monitors should not be used when Power-Down and/or Sleep mode are required by the application."	2-10

Revision	Changes	Page
Revision 6 (continued)	Dynamic power values were updated in the following tables. The table subtitles changed where FPGA I/O banks were involved to note "I/O assigned to EMC I/O pins" (SAR 30987). Table 2-10 • Summary of I/O Input Buffer Power (per pin) – Default I/O Software Settings Table 2-13 • Summary of I/O Output Buffer Power (per pin) – Default I/O Software Settings.	2-10 2-11
	The "Timing Model" was updated (SAR 30986).	2-19
	Values in the timing tables for the following sections were updated. Table subtitles were updated for FPGA I/O banks to note "I/O assigned to EMC I/O pins" (SAR 30986). "Overview of I/O Performance" section: Table 2-24, Table 2-25 "Detailed I/O DC Characteristics" section: Table 2-38, Table 2-39, Table 2-40, Table 2-44, Table 2-45, Table 2-46, Table 2-50, Table 2-51, Table 2-52, Table 2-56, Table 2-57, Table 2-58, Table 2-61, Table 2-62 "LVDS" section: Table 2-65 "LVPECL" section: Table 2-68 "Global Tree Timing Characteristics" section: Table 2-80, Table 2-81	2-23 2-26 2-40 2-42 2-59
	The "PQ208" section and pin tables are new (SAR 31005).	5-32
	Global clocks were removed from the A2F060 pin table for the "CS288" and "FG256" packages, resulting in changed function names for affected pins (SAR 31033).	5-40
Revision 5 (December 2010)	Table 2-2 • Analog Maximum Ratings was revised. The recommended CM[n] pad voltage (relative to ground) was changed from –11 to –0.3 (SAR 28219).	2-2
	Table 2-7 • Temperature and Voltage Derating Factors for Timing Delays was revised to change the values for 100ºC.	2-9
	Power-down and Sleep modes, and all associated notes, were removed from Table 2-8 • Power Supplies Configuration (SAR 29479). IDC3 and IDC4 were renamed to IDC1 and IDC2 (SAR 29478). These modes are no longer supported. A note was added to the table stating that current monitors and temperature monitors should not be used when Power-down and/or Sleep mode are required by the application.	2-10
	The "Power-Down and Sleep Mode Implementation" section was deleted (SAR 29479).	N/A
	Values for PAC9 and PAC10 for LVDS and LVPECL were revised in Table 2-10 • Summary of I/O Input Buffer Power (per pin) – Default I/O Software Settings and Table 2-12 • Summary of I/O Output Buffer Power (per pin) – Default I/O Software Settings*.	2-10, 2-11
	Values for PAC1 through PAC4, PDC1, and PDC2 were added for A2F500 in Table 2-14 • Different Components Contributing to Dynamic Power Consumption in SmartFusion cSoCs and Table 2-15 • Different Components Contributing to the Static Power Consumption in SmartFusion cSoCs	2-12, 2-13
	The equation for "Total Dynamic Power Consumption—PDYN" in "SoC Mode" was revised to add P_{MSS}. The "Microcontroller Subsystem Dynamic Contribution—PMSS" section is new (SAR 29462).	2-14, 2-18
	Information in Table 2-24 • Summary of I/O Timing Characteristics—Software Default Settings (applicable to FPGA I/O banks) and Table 2-25 • Summary of I/O Timing Characteristics—Software Default Settings (applicable to MSS I/O banks) was updated.	2-25

Revision	Changes	Page
Revision 5 (continued)	Available values for the Std. speed were added to the timing tables from Table 2-38 • 3.3 V LVTTL / 3.3 V LVCMOS High Slew to Table 2-92 • JTAG 1532 (SAR 29331). One or more values changed for the –1 speed in tables covering 3.3 V LVCMOS, 2.5 V LVCMOS, 1.8 V LVCMOS, 1.5 V LVCMOS, Combinatorial Cell Propagation Delays, and A2F200 Global Resources.	2-31 to 2-76
	Table 2-80 • A2F500 Global Resource is new.	2-60
	Table 2-90 • eNVM Block Timing, Worst Commercial Case Conditions: TJ = 85°C, VCC = 1.425 V was revised (SAR 27585).	2-75
	The programmable analog specifications tables were revised with updated information.	2-77 to 2-87
	Table 4-1 • Supported JTAG Programming Hardware was revised by adding a note to indicate "planned support" for several of the items in the table.	4-7
	The note on JTAGSEL in the "In-System Programming" section was revised to state that SoftConsole selects the appropriate TAP controller using the CTXSELECT JTAG command. When using SoftConsole, the state of JTAGSEL is a "don't care" (SAR 29261).	4-7
	The "CS288" and "FG256" pin tables for A2F060 are new, comparing the A2F060 function with the A2F200 function (SAR 29353).	5-23
	The "Handling When Unused" column was removed from the "FG256" pin table for A2F200 and A2F500 (SAR 29691).	5-39
Revision 4 (September 2010)	Table 2-8 • Power Supplies Configuration was revised. VCCRCOSC was moved to a column of its own with new values. VCCENVM was added to the table. Standby mode for VJTAG and VPP was changed from 0 V to N/A. "Disable" was changed to "Off" in the eNVM column. The column for RCOSC was deleted.	2-10
	The "Power-Down and Sleep Mode Implementation" section was revised to include VCCROSC.	2-11
Revision 3 (September 2010)	The "I/Os and Operating Voltage" section was revised to list "single 3.3 V power supply with on-chip 1.5 V regulator" and "external 1.5 V is allowed" (SAR 27663).	I
	The CS288 package was added to the "Package I/Os: MSS + FPGA I/Os" table (SAR 27101), "Product Ordering Codes" table, and "Temperature Grade Offerings" table (SAR 27044). The number of direct analog inputs for the FG256 package in A2F060 was changed from 8 to 6.	III, VI, VI
	Two notes were added to the "SmartFusion cSoC Family Product Table" indicating limitations for features of the A2F500 device: *Two PLLs are available in CS288 and FG484 (one PLL in FG256).* *[ADCs, DACs, SCBs, comparators, current monitors, and bipolar high voltage monitors are] Available on FG484 only. FG256 and CS288 packages offer the same programmable analog capabilities as A2F200.* Table cells were merged in rows containing the same values for easier reading (SAR 24748).	II
	The security feature option was added to the "Product Ordering Codes" table.	VI

Revision	Changes	Page
Revision 3 (continued)	In Table 2-3 • Recommended Operating Conditions5,6, the VDDBAT recommended operating range was changed from "2.97 to 3.63" to "2.7 to 3.63" (SAR 25246). Recommended operating range was changed to "3.15 to 3.45" for the following voltages: VCC33A VCC33ADCx VCC33AP VCC33SDDx VCCMAINXTAL VCCLPXTAL Two notes were added to the table (SAR 27109): 1. *The following 3.3 V supplies should be connected together while following proper noise filtering practices: VCC33A, VCC33ADCx, VCC33AP, VCC33SDDx, VCCMAINXTAL, and VCCLPXTAL.* 2. *The following 1.5 V supplies should be connected together while following proper noise filtering practices: VCC, VCC15A, and VCC15ADCx.*	2-3
	In Table 2-3 • Recommended Operating Conditions5,6, the description for VCCLPXTAL was corrected to change "32 Hz" to "32 KHz" (SAR 27110).	2-3
	The "Power Supply Sequencing Requirement" section is new (SAR 27178).	2-4
	Table 2-8 • Power Supplies Configuration was revised to change most on/off entries to voltages. Note 5 was added, stating that "on" means proper voltage is applied. The values of 6 µA and 16 µA were removed for IDC1 and IDC2 for 3.3 V. A note was added for IDC1 and IDC2: "Power mode and Sleep mode are consuming higher current than expected in the current version of silicon. These specifications will be updated when new version of the silicon is available" (SAR 27926).	2-10
	The "Power-Down and Sleep Mode Implementation" section is new (SAR 27178).	2-11
	A note was added to Table 2-86 • SmartFusion CCC/PLL Specification, pertaining to f_{out_CCC}, stating that "one of the CCC outputs (GLA0) is used as an MSS clock and is limited to 100 MHz (maximum) by software" (SAR 26388).	2-63
	Table 2-90 • eNVM Block Timing, Worst Commercial Case Conditions: TJ = 85°C, VCC = 1.425 V was revised. Values were included for A2F200 and A2F500, for –1 and Std. speed grades. A note was added to define 6:1:1:1 and 5:1:1:1 (SAR 26166).	2-75
	The units were corrected (mV instead of V) for input referred offset voltage, GDEC[1:0] = 00 in Table 2-97 • ABPS Performance Specifications (SAR 25381).	2-82
	The test condition values for operating current (ICC33A, typical) were changed in Table 2-100 • Voltage Regulator (SAR 26465).	2-87
	Figure 2-46 • Typical Output Voltage was revised to add legends for the three curves, stating the load represented by each (SAR 25247).	2-88
	The "SmartFusion Programming" chapter was moved to this document from the SmartFusion Subsystem Microcontroller User's Guide (SAR 26542). The "Typical Programming and Erase Times" section was added to this chapter.	4-7
	Figure 4-1 • TRSTB Logic was revised to change 1.5 V to "VJTAG (1.5 V to 3.3 V nominal)" (SAR 24694).	4-8

Revision	Changes	Page
Revision 3 (continued)	Two notes were added to the "Supply Pins" table (SAR 27109): 1. *The following supplies should be connected together while following proper noise filtering practices: VCC33A, VCC33ADCx, VCC33AP, VCC33SDDx, VCCMAINXTAL, and VCCLPXTAL.* 2. *The following 1.5 V supplies should be connected together while following proper noise filtering practices: VCC, VCC15A, and VCC15ADCx.*	5-1
	The descriptions for the "VCC33N", "NCAP", and "PCAP" pins were revised to include information on what to do if analog SCB features and SDDs are not used (SAR 26744).	5-2, 5-9, 5-9
	Information was added to the "User Pins" table regarding tristating of used and unused GPIO pins. The IO portion of the table was revised to state that unused I/O pins are disabled by Libero IDE software and include a weak pull-up resistor (SAR 26890). Information was added regarding behavior of used I/O pins during power-up.	5-6
	The type for "EMC_RW_N" was changed from In/out to Out (SAR 25113).	5-12
	A note was added to the "Analog Front-End (AFE)" table stating that unused analog inputs should be grounded (SAR 26744).	5-14
	The "TQ144" section is new, with pin tables for A2F200 and A2F500 (SAR 27044).	5-18
	The "FG256" pin table was replaced and now includes "Handling When Unused" information (SAR 27709).	5-39
Revision 2 (May 2010)	Embedded nonvolatile flash memory (eNVM) was changed from "64 to 512 Kbytes" to "128 to 512 Kbytes" in the "Microcontroller Subsystem (MSS)" section and "SmartFusion cSoC Family Product Table" (SAR 26005).	I, II
	The main oscillator range of values was changed to "32 KHz to 20 MHz" in the "Microcontroller Subsystem (MSS)" section and the "SmartFusion cSoC Family Product Table" (SAR 24906).	I, II
	The value for t_{PD} was changed from 50 ns to 15 ns for the high-speed voltage comparators listed in the "Analog Front-End (AFE)" section (SAR 26005).	I
	The number of PLLs for A2F200 was changed from 2 to 1 in the "SmartFusion cSoC Family Product Table" (SAR 25093).	II
	Values for direct analog input, total analog input, and total I/Os were updated for the FG256 package, A2F060, in the "Package I/Os: MSS + FPGA I/Os" table. The Max. column was removed from the table (SAR 26005).	III
	The Speed Grade section of the "Product Ordering Codes" table was revised (SAR 25257).	VI
Revision 1 (March 2010)	The "Product Ordering Codes" table was revised to add "blank" as an option for lead-free packaging and application (junction temperature range).	VI
	Table 2-3 • Recommended Operating Conditions5,6 was revised. Ta (ambient temperature) was replaced with T_J (junction temperature).	2-3
	PDC5 was deleted from Table 2-15 • Different Components Contributing to the Static Power Consumption in SmartFusion cSoCs.	2-13
	The formulas in the footnotes for Table 2-29 • I/O Weak Pull-Up/Pull-Down Resistances were revised.	2-27
	The values for input biased current were revised in Table 2-93 • Current Monitor Performance Specification.	2-77

Revision	Changes	Page
Revision 0 (March 2010)	The "Analog Front-End (AFE)" section was updated to change the throughput for 10-bit mode from 600 Ksps to 550 Ksps.	I
	The A2F060 device was added to product information tables.	N/A
	The "Product Ordering Codes" table was updated to removed Std. speed and add speed grade 1. Pre-production was removed from the application ordering code category.	VI
	The "SmartFusion cSoC Block Diagram" was revised.	IV
	The "Datasheet Categories" section was updated, referencing the "SmartFusion cSoC Block Diagram" table, which is new.	1-4, IV
	The "VCCI" parameter was renamed to "VCCxxxxIOBx." "Advanced I/Os" were renamed to "FPGA I/Os." Generic pin names that represent multiple pins were standardized with a lower case x as a placeholder. For example, VAREFx designates VAREF0, VAREF1, and VAREF2. Modes were renamed as follows: Operating mode was renamed to SoC mode. 32KHz Active mode was renamed to Standby mode. Battery mode was renamed to Time Keeping mode. Table entries have been filled with values as data has become available.	N/A
	Table 2-1 • Absolute Maximum Ratings, Table 2-2 • Analog Maximum Ratings, and Table 2-3 • Recommended Operating Conditions5,6 were revised extensively.	2-1 through 2-3
	Device names were updated in Table 2-6 • Package Thermal Resistance.	2-7
	Table 2-8 • Power Supplies Configuration was revised extensively.	2-10
	Table 2-11 • Summary of I/O Input Buffer Power (per pin) – Default I/O Software Settings was revised extensively.	2-11
	Removed "Example of Power Calculation."	N/A
	Table 2-14 • Different Components Contributing to Dynamic Power Consumption in SmartFusion cSoCs was revised extensively.	2-12
	Table 2-15 • Different Components Contributing to the Static Power Consumption in SmartFusion cSoCs was revised extensively.	2-13
	The "Power Calculation Methodology" section was revised.	2-14
	Table 2-83 • Electrical Characteristics of the RC Oscillator was revised extensively.	2-61
	Table 2-85 • Electrical Characteristics of the Low Power Oscillator was revised extensively.	2-62
	The parameter t_{RSTBQ} was changed to T_{C2CWRH} in Table 2-87 • RAM4K9.	2-69
	The 12-bit mode row for integral non-linearity was removed from Table 2-95 • ADC Specifications. The typical value for 10-bit mode was revised. The table note was punctuated correctly to make it clear.	2-80
	Figure 37-34 • Write Access after Write onto Same Address, Figure 37-34 • Read Access after Write onto Same Address, and Figure 37-34 • Write Access after Read onto Same Address were deleted.	N/A
	Table 2-100 • Voltage Regulator was revised extensively.	2-87
	The "Serial Peripheral Interface (SPI) Characteristics" section and "Inter-Integrated Circuit (I2C) Characteristics" section are new.	2-89, 2-91

Revision	Changes	Page
Revision 0 (continued)	"SmartFusion Development Tools" section was replaced with new content.	3-1
	The pin description tables were revised by adding additional pins to reflect the pinout for A2F500.	5-1 through 5-16
	The descriptions for "GNDSDD1" and "VCC33SDD1" were revised.	5-1, 5-2
	The description for "VCC33A" was revised.	5-2
	The pin tables for the "FG256" and "FG484" were replaced with tables that compare pin functions across densities for each package.	5-39
Draft B (December 2009)	The "Digital I/Os" section was renamed to the "I/Os and Operating Voltage" section and information was added regarding digital and analog VCC.	I
	The "SmartFusion cSoC Family Product Table" and "Package I/Os: MSS + FPGA I/Os" section were revised.	II
	The terminology for the analog blocks was changed to "programmable analog," consisting of two blocks: the analog front-end and analog compute engine. This is reflected throughout the text and in the "SmartFusion cSoC Block Diagram".	IV
	The "Product Ordering Codes" table was revised to add G as an ordering code for eNVM size.	VI
	Timing tables were populated with information that has become available for speed grade –1.	N/A
	All occurrences of the VMV parameter were removed.	N/A
	The SDD[n] voltage parameter was removed from Table 2-2 • Analog Maximum Ratings.	2-2
	Table 36-4 • Flash Programming Limits – Retention, Storage and Operating Temperature was replaced with Table 2-4 • FPGA and Embedded Flash Programming, Storage and Operating Limits.	2-4
	The "Thermal Characteristics" section was revised extensively.	2-7
	Table 2-8 • Power Supplies Configuration was revised significantly.	2-10
	Table 2-14 • Different Components Contributing to Dynamic Power Consumption in SmartFusion cSoCs and Table 2-15 • Different Components Contributing to the Static Power Consumption in SmartFusion cSoCs were updated.	2-12
	Figure 2-2 • Timing Model was updated.	2-19
	The temperature associated with the reliability for LVTTL/LVCMOS in Table 2-34 • I/O Input Rise Time, Fall Time, and Related I/O Reliability was changed from 110º to 100º.	2-29
	The values in Table 2-78 • Combinatorial Cell Propagation Delays were updated.	2-57
	Table 2-85 • Electrical Characteristics of the Low Power Oscillator is new. Table 2-84 • Electrical Characteristics of the Main Crystal Oscillator was revised.	2-62
	Table 2-90 • eNVM Block Timing, Worst Commercial Case Conditions: TJ = 85°C, VCC = 1.425 V and Table 2-91 • FlashROM Access Time, Worse Commercial Case Conditions: TJ = 85°C, VCC = 1.425 V are new.	2-75
	The performance tables in the "Programmable Analog Specifications" section were revised, including new data available. Table 2-99 • Analog Sigma-Delta DAC is new.	2-77
	The "256-Pin FBGA" table for A2F200 is new.	4-15

Datasheet Categories

Categories

In order to provide the latest information to designers, some datasheet parameters are published before data has been fully characterized from silicon devices. The data provided for a given device, as highlighted in the "SmartFusion cSoC Device Status" table on page III, is designated as either "Product Brief," "Advance," "Preliminary," or "Production." The definitions of these categories are as follows:

Product Brief

The product brief is a summarized version of a datasheet (advance or production) and contains general product information. This document gives an overview of specific device and family information.

Advance

This version contains initial estimated information based on simulation, other products, devices, or speed grades. This information can be used as estimates, but not for production. This label only applies to the DC and Switching Characteristics chapter of the datasheet and will only be used when the data has not been fully characterized.

Preliminary

The datasheet contains information based on simulation and/or initial characterization. The information is believed to be correct, but changes are possible.

Production

This version contains information that is considered to be final.

Export Administration Regulations (EAR)

The products described in this document are subject to the Export Administration Regulations (EAR). They could require an approved export license prior to export from the United States. An export includes release of product or disclosure of technology to a foreign national inside or outside the United States.

Microsemi SoC Products Group Safety Critical, Life Support, and High-Reliability Applications Policy

The SoC Products Group products described in this advance status document may not have completed the SoC Products Group's qualification process. Products may be amended or enhanced during the product introduction and qualification process, resulting in changes in device functionality or performance. It is the responsibility of each customer to ensure the fitness of any product (but especially a new product) for a particular purpose, including appropriateness for safety-critical, life-support, and other high-reliability applications. Consult the SoC Products Group's Terms and Conditions for specific liability exclusions relating to life-support applications. A reliability report covering all of the SoC Products Group's products is available on the SoC Products Group website at http://www.microsemi.com/soc/documents/ORT_Report.pdf. Microsemi SoC Products Group also offers a variety of enhanced qualification and lot acceptance screening procedures. Contact your local SoC Products Group sales office for additional reliability information.

Microsemi Corporate Headquarters
One Enterprise, Aliso Viejo CA 92656 USA
Within the USA: +1 (949) 380-6100
Sales: +1 (949) 380-6136
Fax: +1 (949) 215-4996

Microsemi Corporation (NASDAQ: MSCC) offers a comprehensive portfolio of semiconductor solutions for: aerospace, defense and security; enterprise and communications; and industrial and alternative energy markets. Products include high-performance, high-reliability analog and RF devices, mixed signal and RF integrated circuits, customizable SoCs, FPGAs, and complete subsystems. Microsemi is headquartered in Aliso Viejo, Calif. Learn more at **www.microsemi.com**.

© 2012 Microsemi Corporation. All rights reserved. Microsemi and the Microsemi logo are trademarks of Microsemi Corporation. All other trademarks and service marks are the property of their respective owners.

51700112-10/01.13