RoHS Compliance

REV	SYM	Revision Record	Appr.	Date
V0		New Version Release	WuHao	2025-07-29
V0		New Version Release	WuHao	2025-07-29

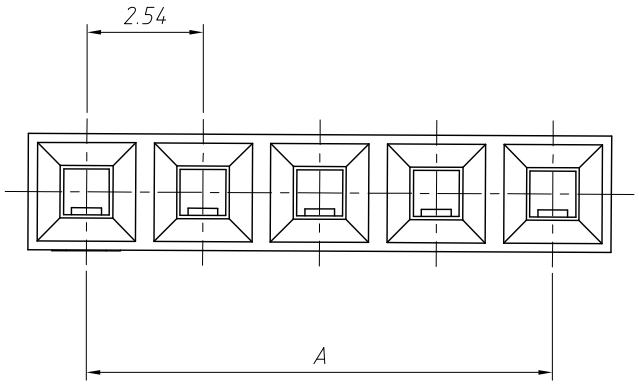

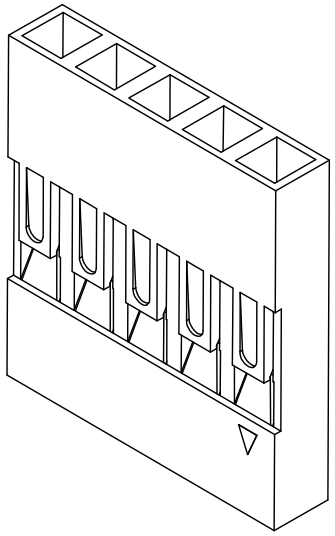

Pin	Dimensions(mm)		Pin	Dimensions(mm)	
	A	B		A	B
02	2.54	5.08	22	53.34	55.88
03	5.08	7.62	23	55.88	58.42
04	7.62	10.16	24	58.42	60.96
05	10.16	12.70	25	60.96	63.50
06	12.70	15.24	26	63.50	66.04
07	15.24	17.78	27	66.04	68.58
08	17.78	20.32	28	68.58	71.12
09	20.32	22.86	29	71.12	73.66
10	22.86	25.40	30	73.66	76.20
11	25.40	27.94	31	76.20	78.74
12	27.94	30.48	32	78.74	81.28
13	30.48	32.02	33	81.28	83.82
14	32.02	35.56	34	83.82	86.36
15	35.56	38.10	35	86.36	88.90
16	38.10	40.64	36	88.90	91.44
17	40.64	43.18	37	91.44	93.98
18	43.18	45.72	38	93.98	96.82
19	45.72	48.26	39	96.82	99.06
20	48.26	50.80	40	99.06	101.60
21	50.80	53.34			

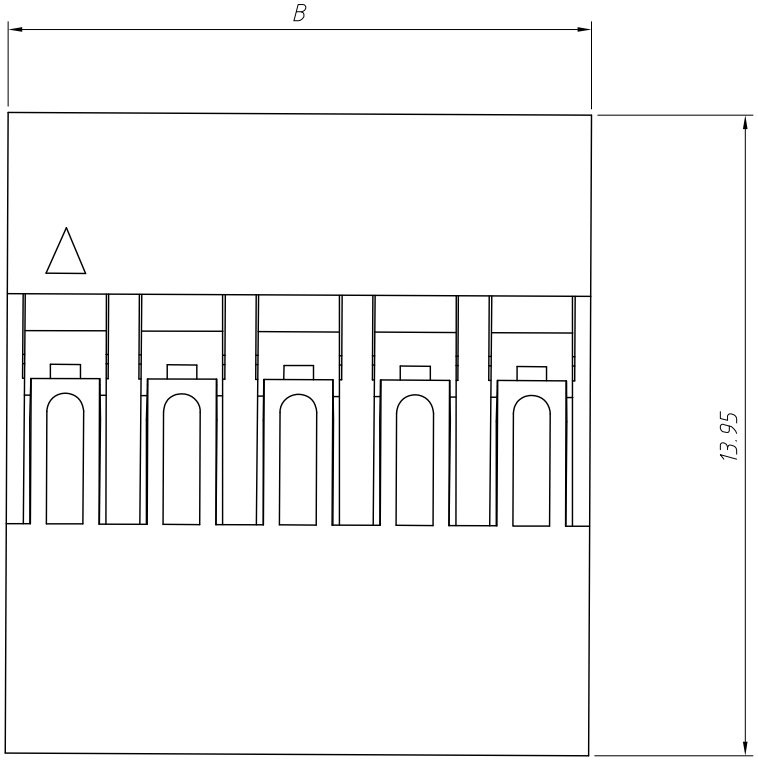

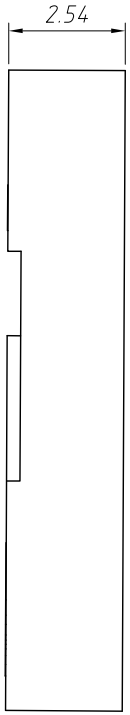

Material:
Housing:PPO,UL 94 V-0,Black/Natural

Electrical Characteristics:
Rated Current:3.0AMP
Voltage rating:250V AC,DC
Temperature range:-25°C~+ 85°C
Insulator Resistance:1000MΩ Min
Withstanding Voltage:1500V AC/minute
Contact Resistance:20mΩ Max

ANGLE TOLERANCE	PROJECTION		Description:	
±3°			2.54mm pitch Wire To Board Connectors	
GENERAL TOLERANCE	UNITS	mm	P/N:	BLS08-CT
x.x ±0.30	SHEET SIZE	A4		CONNTHERM
x.xx ±0.20	Draw:	Daniel	2021-01-11	
x.xxx ±0.10	Check:	Daniel	2021-01-11	