REVISIONS					
REV	ECO	DESCRIPTION	DATE	BY	APPR
A1	--	RELEASED DRAWING	Jul-03-2017	Nick	Tommy
A2	--	UPDATE PANEL CUT OUT REFERENCE	Aug-08-2017	Nick	Tommy
A3	--	UPDATE DRAWING	Mar-20-2018	White	Tommy
A4	--	UPDATE DRAWING	Apr-10-2018	White	Tommy

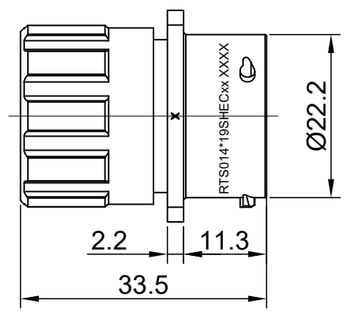

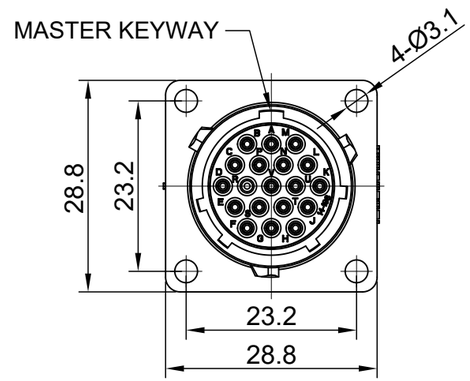

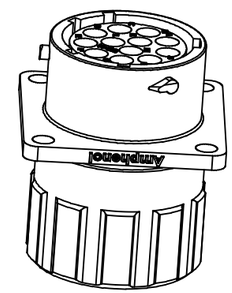

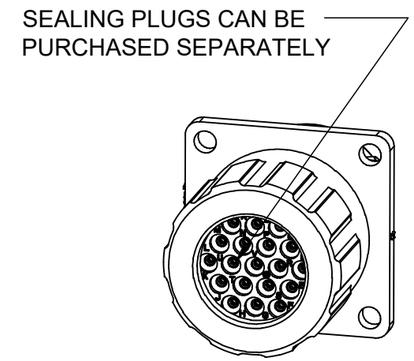

NOTES : (UNLESS OTHERWISE SPECIFIED)

1. MATERIAL :
   - SHELL : THERMOPLASTIC , UL94 V-0.
   - INSERT : THERMOPLASTIC , UL94 V-0.
   - O-RING : NBR OR SILICONE RUBBER.
   - SEAL GASKET : NBR OR SILICONE RUBBER.
   - END CAP : THERMOPLASTIC , UL94 V-0.
   - PLASTIC RING:THERMOPLASTIC , UL94 V-0.
   - WIRE SEAL : SILICONE RUBBER.
2. SPECIFICATIONS :
   - 2.1 RATED CURRENT : 5A (MAX).
   - 2.2 RATED VOLTAGE : 250V(AC/DC).
   - 2.3 OPERATING TEMPERATURE : SEE TABLE .
   - 2.4 DIELECTRIC WITHSTANDING VOLTAGE : LESS THAN 2 MILLIAMPS CURRENT LEAKAGE@2000 VOLTS AC.
   - 2.5 INSULATION RESISTANCE : 5000 MEGOHMS MIN.
   - 2.6 IP CLASS : IP67 AND IP69K IN THE MATED CONDITION, WIRE SEALS FULLY POPULATED.
   - 2.7 MATING CYCLES DURABILITY : 500 CYCLES MIN.
   - 2.8 RoHS COMPLIANT.
3. SUITABLE CONTACTS : 20# CONTACT.
4. ALL DIMENSIONS ARE FOR REFERENCE USE ONLY.

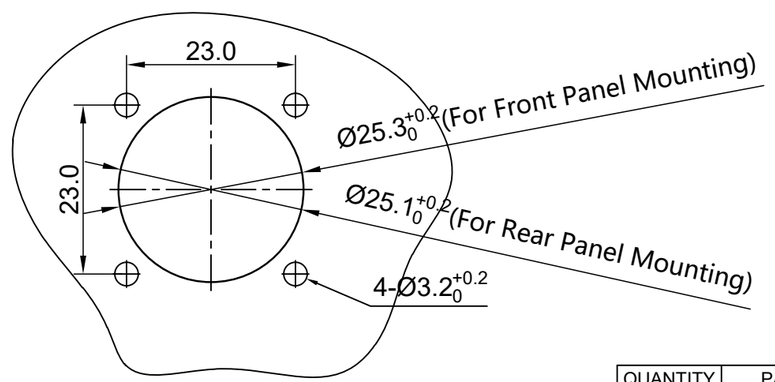

PANEL CUT OUT REFERENCE

KEY	PART NUMBER	
	-40°C ~ 105°C	-40°C ~ 125°C
N	RTS014N19SHEC	RTS014N19SHEC03

QUANTITY	PART NUMBER	DESCRIPTION	ITEM

MATERIALS LIST

UNLESS OTHERWISE SPECIFIED
1) All dimensions are in metric(mm).
2) Tolerances are as follows:
1 PL DEC ±0.30
2 PL DEC ±0.15
3 PL DEC ±0.08
Fractions ±1/64
Angles ±1°
3) Note reference = X

MATERIAL SPECIFICATIONS:

PROCESS SPECIFICATIONS:

NEXT ASS'Y:

SIGNATURES		DATE
DRAWN:	White	Apr-10-2018
CHECKED:	Tod	Apr-10-2018
ENGINEER:		
APPROVAL:	Tommy	Apr-10-2018
CUSTOMER:		

THIS DRAWING IS SUPPLIED FOR INFORMATION ONLY. DESIGN FEATURES, SPECIFICATIONS AND PERFORMANCE DATA SHOWN HEREON ARE THE PROPERTY OF THE AMPHENOL CORPORATION. NO RIGHTS OF REPRODUCTION ARE IMPLIED. ALL DIMENSIONS ARE SUBJECT TO NORMAL MANUFACTURING VARIATIONS.

Amphenol
Sine Systems - www.amphenol-sine.com
44724 Morley Drive
Clinton Township, MI 48036

ECO-MATE, RECEPTACLE, END CAP, FLANGE, SIZE 14, 19 POS, SOCKET

SIZE	TYPE	DWG NO:	REVISION
B	C-	RTS014*19SHECxx	A4

SCALE: NONE SHEET 1 OF 1

TITLE: ECO-MATE, RECEPTACLE, END CAP, FLANGE, SIZE 14, 19 POS, SOCKET
DWG NO: RTS014*19SHECxx
REV: A4
SH: 1
OF: 1