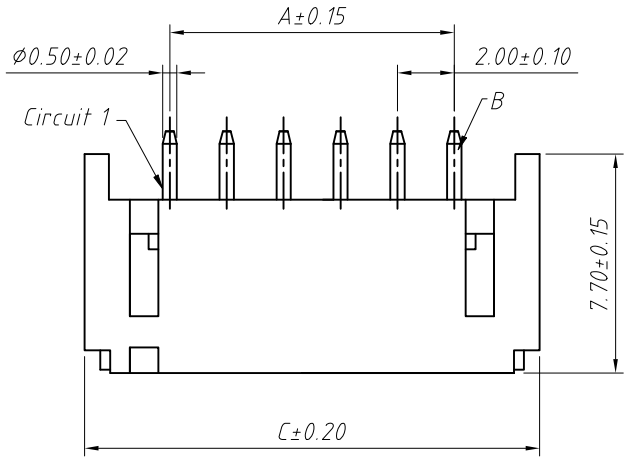


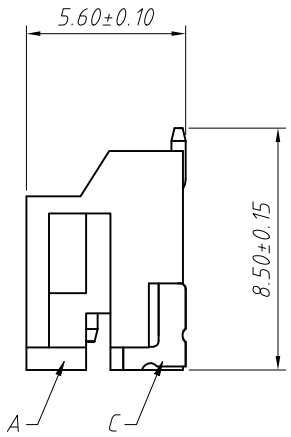


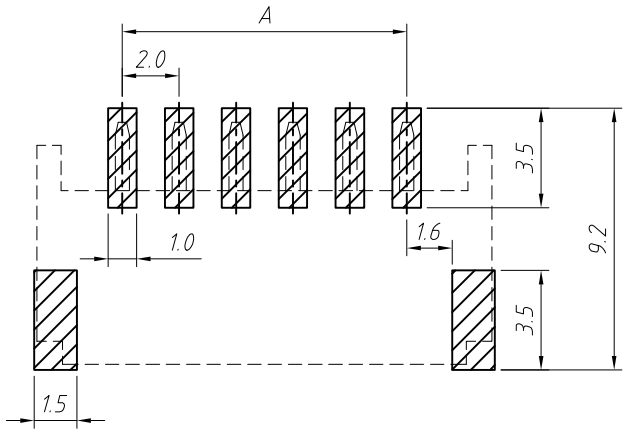


Suggested PCB Layout

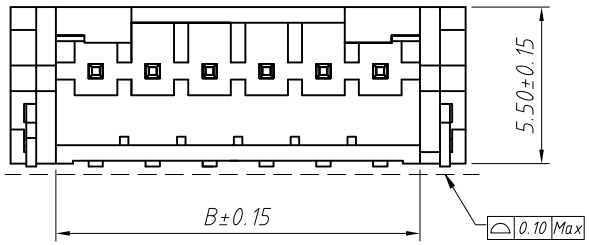


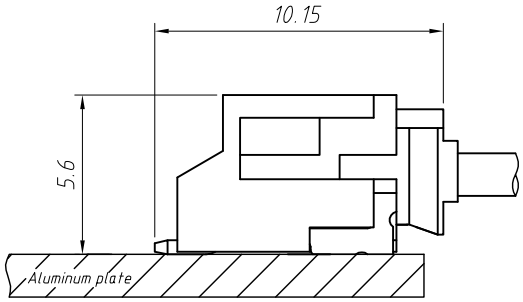


Assembly Layout

| Circuit | Dimensions(mm) | | |
|---|---|---|---|
| | A | B | C |
| 02 | 2.00 | 4.75 | 8.00 |
| 03 | 4.00 | 6.75 | 10.00 |
| 04 | 6.00 | 8.75 | 12.00 |
| 05 | 8.00 | 10.75 | 14.00 |
| 06 | 10.00 | 12.75 | 16.00 |
| 07 | 12.00 | 14.75 | 18.00 |
| 08 | 14.00 | 16.75 | 20.00 |
| 09 | 16.00 | 18.75 | 22.00 |
| 10 | 18.00 | 20.75 | 24.00 |
| 11 | 20.00 | 22.75 | 26.00 |
| 12 | 22.00 | 24.75 | 28.00 |
| 13 | 24.00 | 26.75 | 30.00 |
| 14 | 26.00 | 28.75 | 32.00 |
| 15 | 28.00 | 30.75 | 34.00 |
| 16 | 30.00 | 32.70 | 36.00 |

Material:
Insulator:LCP UL 94V-0,Beige
Contacts:Brass, Tin Plated
SolderTab:Brass, Tin Plated
Electrical Specification:
Poles: 02 to 16
Contact resistance:≤20mΩ
Insulation resistance:≥1000MΩ
Rated voltage:250V AC DC
Rated current:2.0A AC DC
Withstand Voltage:1000V AC/minute
Temperature Range:-25℃~ +105℃
Packing:R=Reel

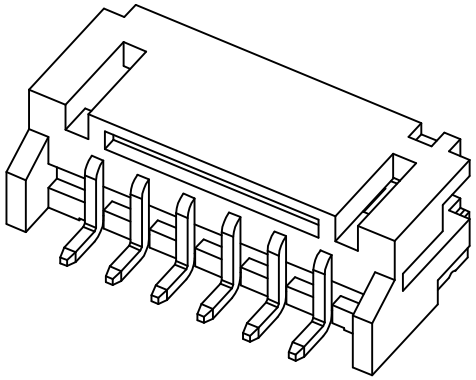

| GENERAL TOLERANCE | PROJECTION | | Description: |
|---|---|---|---|
| X. ±0.30 | UNITS | mm | Ptich 2.00mm Horizontal SMT Wafer |
| .X ±0.20 | SCALE | 1:1 | |
| .XX ±0.10 | Draw by: | Jenny | P/N: WS06DH-CT-TR |
| ANGLE TOLERANCE | Check by: | | CONNTHERM |
| X. ±5° | Date | 2018-03-01 | |
| .X ±3° | | | |
| .XX ±2° | SHEET | 1 OF 1 | |

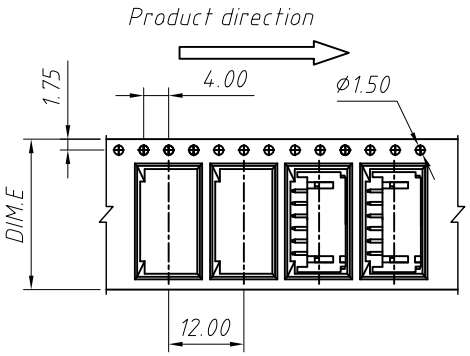


02~06 Contacts

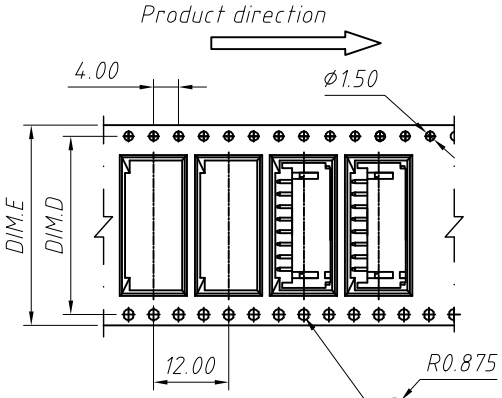


07~16 Contacts

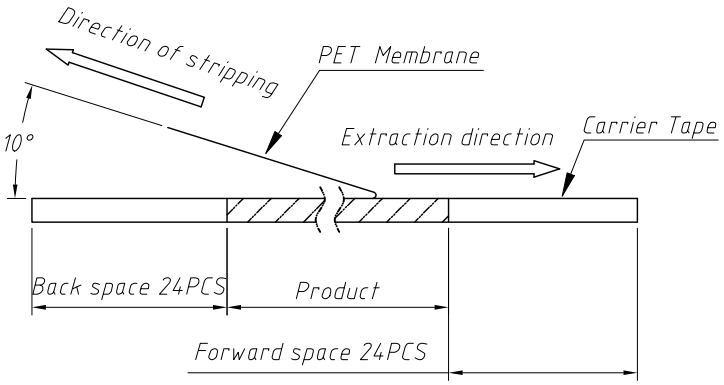


PET Membrane Schematic diagram of strippin

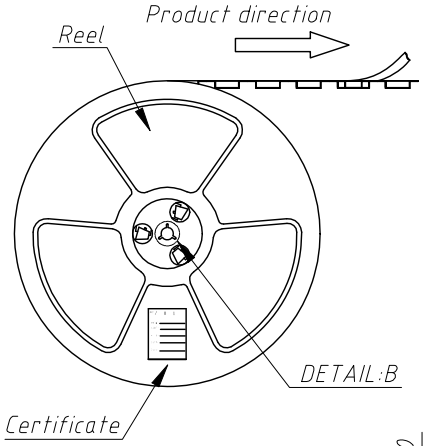


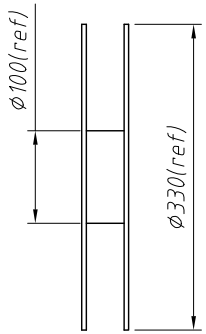


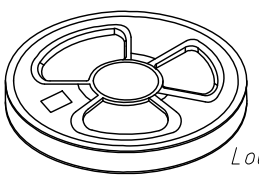

Loading × Disk (Reference List 1)

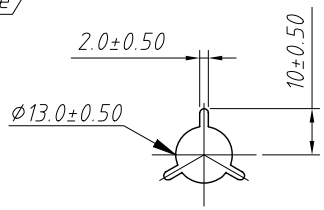


DETAIL:B

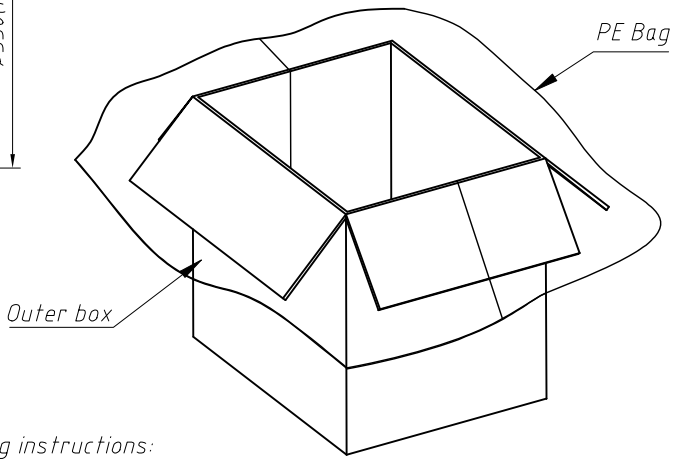


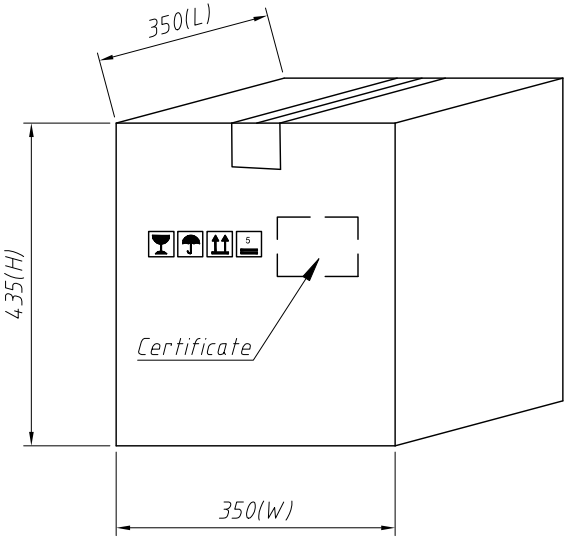


| Circuits | DIM.D | DIM.E | Q'ty/Reel | Packing Reel/Caton |
|---|---|---|---|---|
| 02-03 PIN | -- | 16 | 1000 PCS | 20/Reel |
| 04-06 PIN | -- | 24 | 1000 PCS | 15/Reel |
| 07-08 PIN | 28.4 | 32 | 1000 PCS | 11/Reel |
| 09-14 PIN | 40.4 | 44 | 1000 PCS | 8/Reel |
| 15-16 PIN | 52.4 | 56 | 1000 PCS | 6/Reel |

Packaging instructions:
Pack the finished products into reels, each with 1000 PCS.
The product will be packed by pasting a certificate on the reel.
The reel is put into the outer box, and the outer box is fitted with one first.
Large PE bags with qualified certificates affixed on the outer case.

| GENERAL TOLERANCE | PROJECTION | | Description: | Packaging Specification |
|---|---|---|---|---|
| X. ±0.30 | UNITS | mm | | Ptich 2.00mm Horizontal SMT |
| .X ±0.20 | SCALE | 1:1 | | |
| .XX ±0.10 | Draw by: | Jenny | P/N: | WS06DH-CT-TR |
| ANGLE TOLERANCE | Check by: | | | CONNTHERM |
| X. ±5° | Date | 2018-03-01 | | |
| .X ±3° .XX ±2° | SHEET | 1 OF 1 | | |