LEGEND ◊ = KEY PRODUCT CHARACTERRISTICS

REVISION HISTORY				
REV	DESCRIPTION	DATE	BY	CHG/No
0	FIRST ISSUE	21-12-17	MH	----

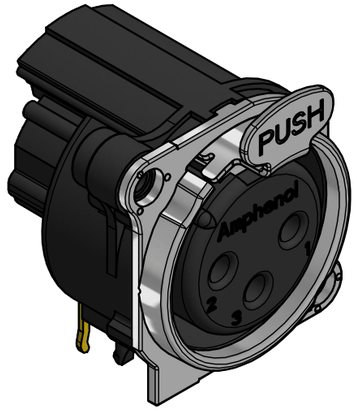

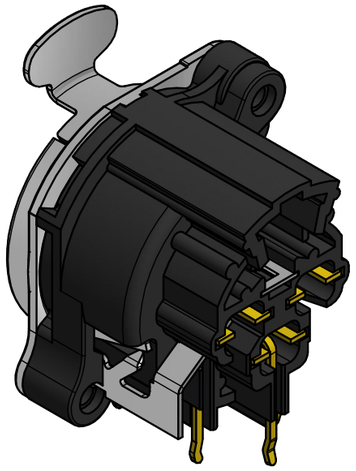

ISO VIEW

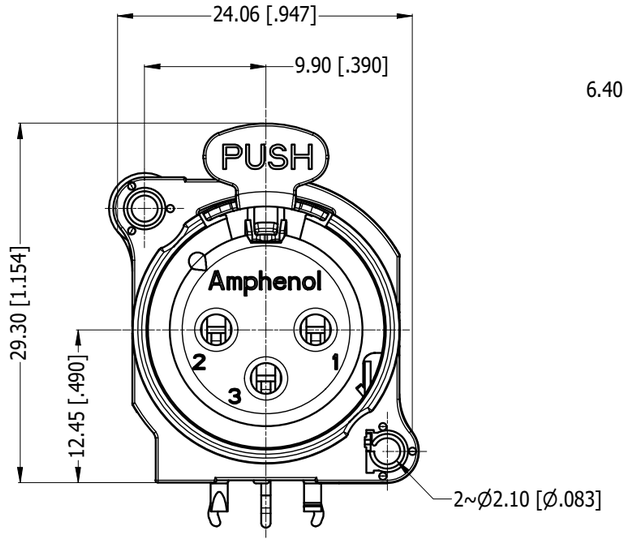

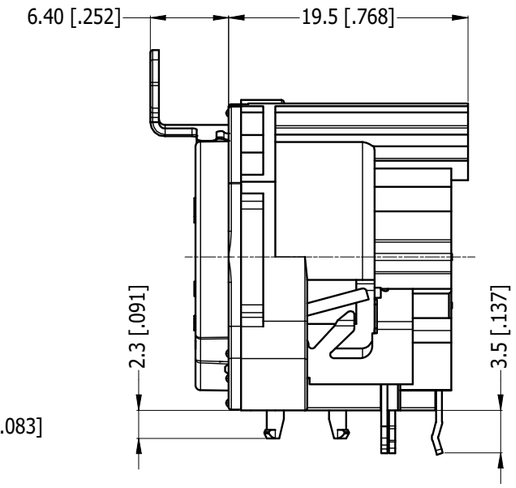

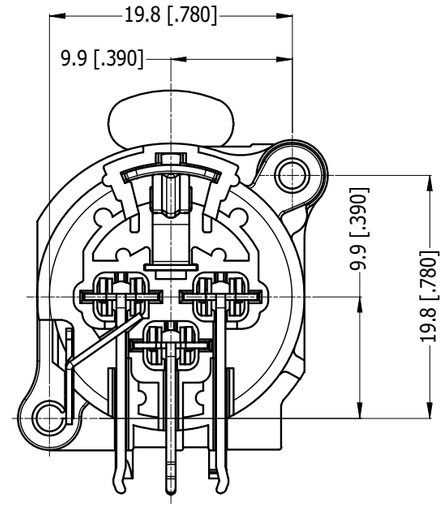

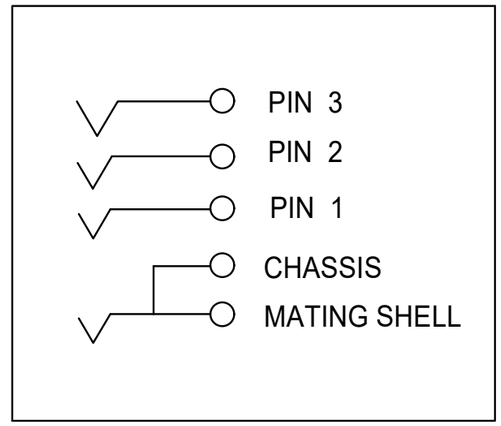

SCHEMATIC CHART

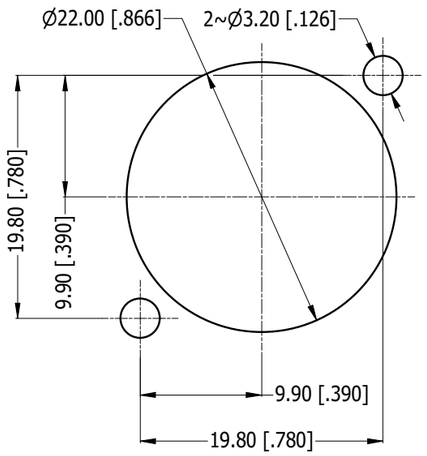

PANEL CUT OUT
REAR VIEW

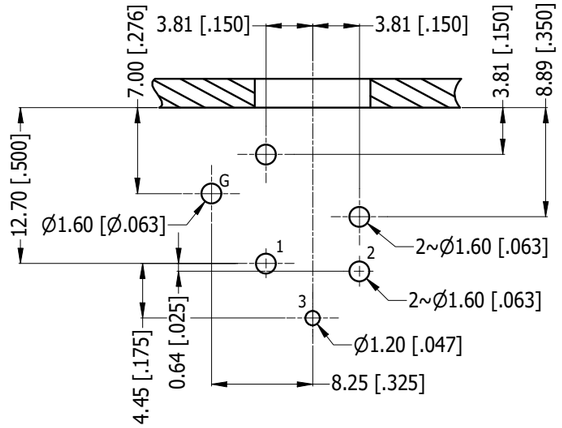

PCB-LAYOUT
COMPONENT SIDE
TOLERANCE: ±0.05mm [.002"]

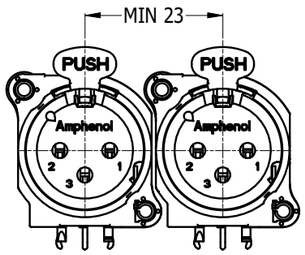

MIN MOUNTING PITCH
SCALE 1:1

UNLESS OTHERWISE SPECIFIED TOLERANCE TO BE LINEAR: X ±0.5, X.X ±0.2, X.XX ±0.1 ANGULAR: X' ±1, X.X' ±30', X.X'X" ±15' BREAK ALL SHARP EDGES AND REMOVE ALL BURRS DO NOT SCALE DIMENSIONS IN MILIMETRES	THIS DOCUMENT IS THE PROPERTY OF AMPHENOL AUSTRALIA PTY. LTD. . NO PART THEREOF MAY BE REPRODUCED AND USED WITHOUT THE PRIOR WRITTEN CONSENT OF THE OWNER MATERIAL: REFER TO COMPONENT FINISH: REFER TO COMPONENT THIRD ANGLE PROJECTION	DRN: MH CKD: MH APP'D: PM SCALE: 2:1	DATE: 21-12-17 DATE: 21-12-17 DATE: 21-12-17 SIZE: A3	Amphenol Amphenol Australia Pty.Ltd, 22 Industry Blvd, Carrum Downs, VIC 3201 TITLE: AC3FBH2-AU-PRE HORIZONTAL FEMALE CUSTOMER DRAWING CAD FILE: 55011280000220

PART No: AC3FBH2-AU-PRE
DRAWING NO. 55011280-000-2
SHEET 2/2