LEGEND ◊ = KEY PRODUCT CHARACTERRISTICS

REVISION HISTORY				
REV	DESCRIPTION	DATE	BY	CHG/No
0	FIRST ISSUE	30/10/08	M.H	8798

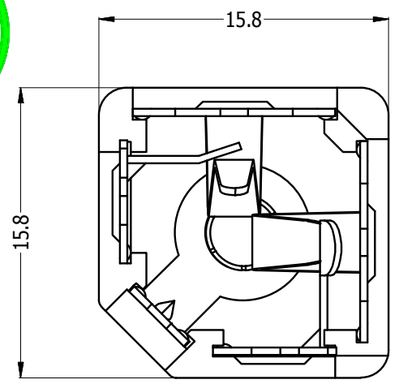

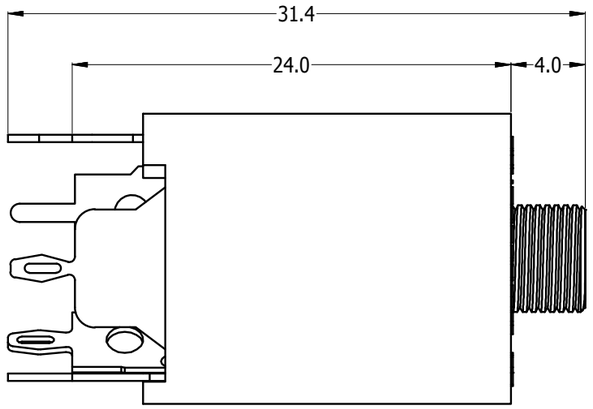

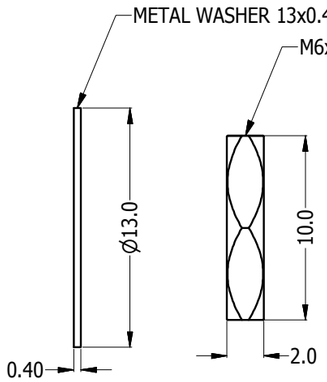

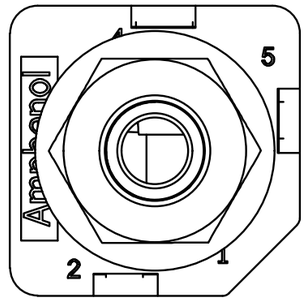

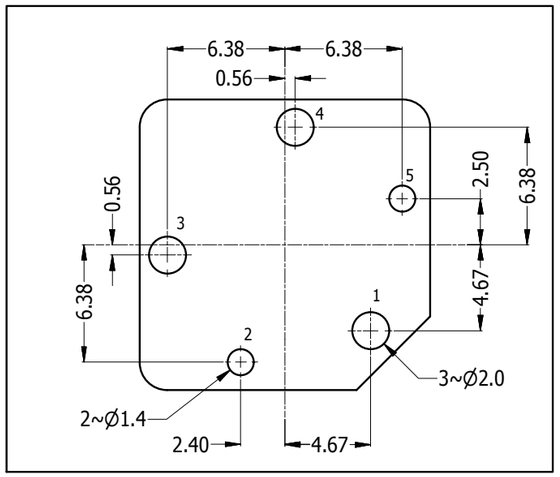

PCB LAYOUT
(CONNECTOR SIDE)

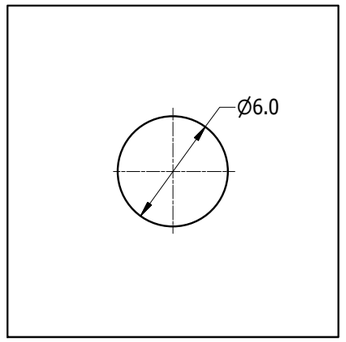

PANEL CUTOUT

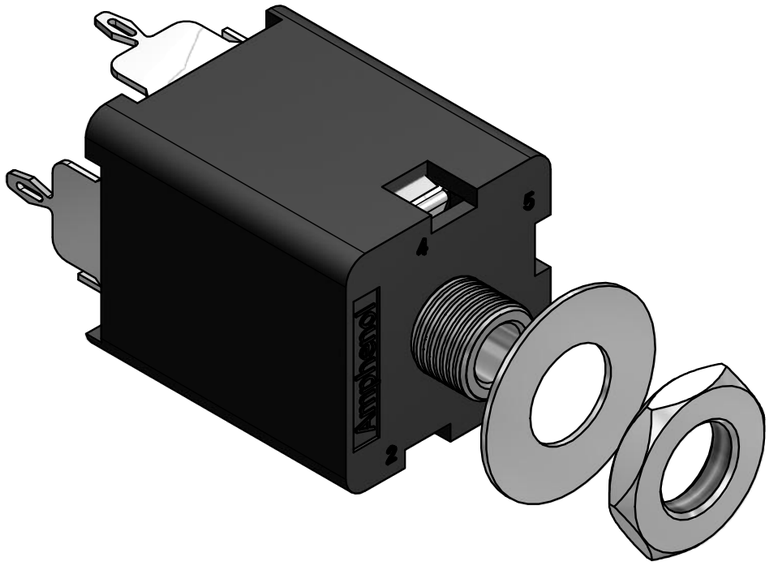

PART NUMBER	ACJM-MV35-2	ACJM-MV35-2S	ACJS-MV35-3	ACJS-MV35-3S	ACJS-MV35-5
SCHEMATIC	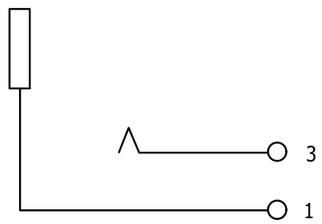	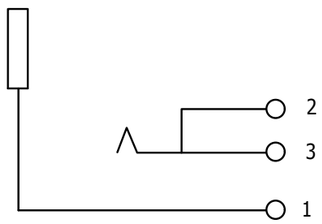	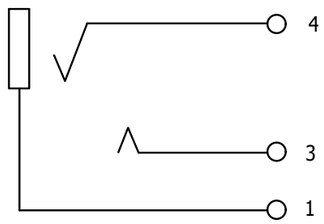	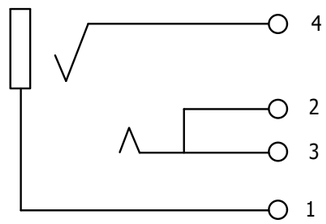	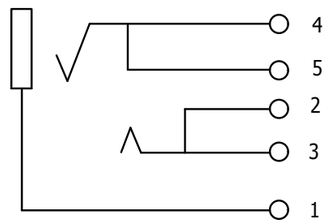

NOTE: This connector is suitable for maximum 1.15mm panel thickness with Metal Washer & Nut

UNLESS OTHERWISE SPECIFIED TOLERANCE TO BE		THIS DOCUMENT IS THE PROPERTY OF AMPHENOL AUSTRALIA PTY. LTD. . NO PART THEREOF MAY BE REPRODUCED AND USED WITHOUT THE PRIOR WRITTEN CONSENT OF THE OWNER			Amphenol	Amphenol Australia Pty.Ltd, 2 Fiveways Blvd, Keysborough, VIC 3173	
LINEAR	ANGULAR	MATERIAL: REFER TO COMPONENTS	DRN: B.Z	DATE: 25/04/08	TITLE: 3.5mm JACK VERTICAL CUSTOMER DRAWING	PART No: SEE CHART	
X ±0.5 X.X ±0.1 X.XX ±0.05	X' ±1 X.X' ±30' X.X'X" ±15'		CKD: M.H	DATE: 29/10/08			
BREAK ALL SHARP EDGES AND REMOVE ALL BURRS							
DO NOT SCALE		FINISH: REFER TO COMPONENTS	APP'D: P.M	DATE: 29/10/08		DRAWING NO. 55010544-001-5	SHEET 1/1
DIMENSIONS IN MILIMETRES		THIRD ANGLE PROJECTION	SCALE: 3:1	SIZE: A3	CAD FILE 55010544001110		