ProASIC®3 Flash Family FPGAs with Optimal Soft ARM Support

INTRODUCTION

ProASIC® 3, the third-generation family of Microchip's flash FPGAs, offers performance, density, and features beyond those of the ProASIC PLUS® family. Nonvolatile flash technology gives ProASIC 3 devices the advantage of being a secure, low power, single-chip solution that is Instant On. ProASIC 3 is reprogrammable and offers time-to-market benefits at an ASIC-level unit cost. These features enable designers to create high-density systems using existing ASIC or FPGA design flows and tools.

ProASIC 3 devices offer 1 kbit of on-chip, reprogrammable, nonvolatile FlashROM storage as well as clock conditioning circuitry based on an integrated Phase-Locked Loop (PLL). The A3P030 devices have no PLL or RAM support. ProASIC 3 devices have up to 1 million system gates, supported with up to 144 kbits of true dual-port SRAM and up to 300 user I/Os.

ProASIC 3 devices support the ARM Cortex-M1 processor. The ARM-enabled devices have Microchip ordering numbers that begin with M1A3P (Cortex-M1) and do not support AES decryption.

FEATURES AND BENEFITS

High Capacity

- 15K to 1M System Gates
- Up to 144 Kbits of True Dual-Port SRAM
- Up to 300 User I/Os

Reprogrammable Flash Technology

- 130-nm, 7-Layer Metal (6 Copper), Flash-Based CMOS Process
- Instant On Level 0 Support
- Single-Chip Solution
- Retains Programmed Design when Powered Off

High Performance

- 350 MHz System Performance
- 3.3V, 66 MHz 64-Bit PCI

  Note: A3P030 devices do not support this feature.

In-System Programming (ISP) and Security

- ISP Using On-Chip 128-Bit Advanced Encryption Standard (AES) Decryption (except ARM®-enabled ProASIC 3 devices) via JTAG (IEEE® 1532–compliant)
- FlashLock® to Secure FPGA Contents

Low Power

- Core Voltage for Low Power
- Support for 1.5V-Only Systems
- Low-Impedance Flash Switches

© 2023 Microchip Technology Inc. and its subsidiaries

High-Performance Routing Hierarchy

- Segmented, Hierarchical Routing and Clock Structure

Advanced I/O

- 700 Mbps DDR, LVDS-Capable I/Os (A3P250 and above)
- 1.5V, 1.8V, 2.5V, and 3.3V Mixed-Voltage Operation
- Wide Range Power Supply Voltage Support per JESD8-B, Allowing I/Os to Operate from 2.7V to 3.6V
- Bank-Selectable I/O Voltages—up to 4 Banks per Chip
- Single-Ended I/O Standards: LVTTL, LVCMOS 3.3V/2.5V/1.8V/1.5V, 3.3V PCI/3.3V PCI-X, and LVCMOS 2.5V/5.0V Input
- Differential I/O Standards: LVPECL, LVDS, B-LVDS, and M-LVDS (A3P250 and above)
- I/O Registers on Input, Output, and Enable Paths
- Hot-Swappable and Cold Sparing I/Os
- Supported only by A3P030 devices.
- Programmable Output Slew Rate and Drive Strength
- Weak Pull-Up/-Down
- IEEE 1149.1 (JTAG) Boundary Scan Test
- Pin-Compatible Packages across the ProASIC 3 Family

Clock Conditioning Circuit (CCC) and PLL

- Six CCC Blocks, One with an Integrated PLL
- Configurable Phase-Shift, Multiply/Divide, Delay Capabilities and External Feedback
- Wide Input Frequency Range (1.5 MHz to 350 MHz)

Embedded Memory

- 1 Kbit of FlashROM User Nonvolatile Memory
- SRAMs and FIFOs with Variable-Aspect-Ratio 4,608-Bit RAM Blocks (×1, ×2, ×4, ×9, and ×18 organizations)
- True Dual-Port SRAM (except ×18)

ARM Processor Support in ProASIC 3 FPGAs

- M1 ProASIC 3 Devices—ARM®Cortex®-M1 Soft Processor Available with or without Debug

TABLE 1 • ARM PROCESSOR SUPPORT IN PROASIC 3 FPGAS

ProASIC 3 Devices	**A3P030**	**A3P060**	**A3P125**	**A3P250**	**A3P400**	**A3P600**	**A3P1000**
Cortex-M1 Devices [1]				**M1A3P250**	**M1A3P400**	**M1A3P600**	**M1A3P1000**
System Gates	30,000	60,000	125,000	250,000	400,000	600,000	1,000,000
Typical Equivalent Macrocells	256	512	1,024	2,048	—	—	—
VersaTiles (D-flip-flops)	768	1,536	3,072	6,144	9,216	13,824	24,576
RAM Kbits (1,024 bits)	—	18	36	36	54	108	144
4,608-Bit Blocks	—	4	8	8	12	24	32

Note 1: Refer to the Cortex-M1 product brief for more information.
2: AES is not available for Cortex-M1 ProASIC 3 devices.
3: Six chip (main) and three quadrant global networks are available for A3P060 and above.
4: The M1A3P250 device does not support FG256 package.
5: For higher densities and support of additional features, refer to the ProASIC 3E Flash Family FPGAs datasheet.

© 2023 Microchip Technology Inc. and its subsidiaries

TABLE 1 • ARM PROCESSOR SUPPORT IN PROASIC 3 FPGAS

ProASIC 3 Devices	A3P030	A3P060	A3P125	A3P250	A3P400	A3P600	A3P1000
Cortex-M1 Devices [1]				M1A3P250	M1A3P400	M1A3P600	M1A3P1000
FlashROM Kbits	1	1	1	1	1	1	1
Secure (AES) ISP [2]	—	Yes	Yes	Yes	Yes	Yes	Yes
Integrated PLL in CCCs	—	1	1	1	1	1	1
VersaNet Globals [3]	6	18	18	18	18	18	18
I/O Banks	2	2	2	4	4	4	4
Maximum User I/Os	77	96	133	157	178	235	300
Package Pins QFN CS VQFP TQFP PQFP FBGA	 QN48, QN68, VQ100	 VQ100 TQ144 FG144	 VQ100 TQ144 PQ208 FG144	 VQ100 PQ208 FG144/ 256 [4]	 PQ208 FG144/ 256/	 PQ208 FG144/256/ 484	 PQ208 FG144/256/ 484

Note 1: Refer to the Cortex-M1 product brief for more information.

2: AES is not available for Cortex-M1 ProASIC 3 devices.

3: Six chip (main) and three quadrant global networks are available for A3P060 and above.

4: The M1A3P250 device does not support FG256 package.

5: For higher densities and support of additional features, refer to the ProASIC 3E Flash Family FPGAs datasheet.

I/Os PER PACKAGE [1]

Table 2 • I/Os PER PACKAGE

ProASIC 3 Devices	A3P030	A3P060	A3P125	A3P250 [2]		A3P400 [2]		A3P600		A3P1000	
Cortex-M1 Devices				M1A3P250 [2,4]		M1A3P400 [2]		M1A3P600		M1A3P1000	
	I/O Type										
Package	Single-Ended I/O	Single-Ended I/O	Single-Ended I/O	Single-Ended I/O[3]	Differential I/O Pairs	Single-Ended I/O[3]	Differential I/O Pairs	Single-Ended I/O[3]	Differential I/O Pairs	Single-Ended I/O[3]	Differential I/O Pairs
QN48	34	—	—	—	—	—	—	—	—	—	—
QN68	49	—	—	—	—	—	—	—	—	—	—
QN132[6]	81	80	84	87	19	—	—	—	—	—	—
VQ100	77	71	71	68	13	—	—	—	—	—	—
TQ144	—	91	100	—	—	—	—	—	—	—	—
PQ208	—	—	133	151	34	151	34	154	35	154	35
FG144	—	96	97	97	24	97	25	97	25	97	25
FG256[4,5]	—	—	—	157	38	178	38	177	43	177	44
FG484[5]	—	—	—	—	—	—	—	235	60	300	74

Note 1: When considering migrating your design to a lower- or higher-density device, refer to the *ProASIC 3 FPGA Fabric User Guide* to ensure complying with design and board migration requirements.

2: For A3P250 and A3P400 devices, the maximum number of LVPECL pairs in east and west banks cannot exceed 15. Refer to the *ProASIC 3 FPGA Fabric User Guide* for position assignments of the 15 LVPECL pairs.

3: Each used differential I/O pair reduces the number of single-ended I/Os available by two.

4: The M1A3P250 device does not support FG256 package.

5: FG256 and FG484 are footprint-compatible packages.

TABLE 3 • PROASIC 3 FPGAS PACKAGE SIZES DIMENSIONS

Package	QN48	QN68	QN132	VQ100	TQ144	PQ208	FG144	FG256	FG484
Length × Width (mm × mm)	6 × 6	8 × 8	8 × 8	14 × 14	20 × 20	28 × 28	13 × 13	17 × 17	23 × 23
Nominal Area (mm^2)	36	64	64	196	400	784	169	289	529
Pitch (mm)	0.4	0.4	0.5	0.5	0.5	0.5	1.0	1.0	1.0
Height (mm)	0.90	0.90	0.75	1.00	1.40	3.40	1.45	1.60	2.23

© 2023 Microchip Technology Inc. and its subsidiaries

PROASIC 3 ORDERING INFORMATION

FIGURE 1: PROASIC 3 ORDERING INFORMATION

A3P1000 – 1 FG G 144 Y I

Application (Temperature Range)
Blank = Commercial (0°C to +85°C Junction Temperature)
I = Industrial (–40°C to +100°C Junction Temperature)
PP = Pre-Production
ES = Engineering Sample (Room Temperature Only)

Security Feature
Y = Device Includes License to Implement IP Based on the Cryptography Research, Inc. (CRI) Patent Portfolio
Blank = Device Does Not Include License to Implement IP Based on the Cryptography Research, Inc. (CRI) Patent Portfolio
Note: Only devices with packages greater than or equal to 5x5 are supported.

Package Lead Count

Lead-Free Packaging
Blank = Standard Packaging
G= RoHS-Compliant (Green) Packaging (some packages also halogen-free)

Package Type
QN = Quad Flat Pack No Leads (0.4 mm and 0.5 mm pitches)
VQ = Very Thin Quad Flat Pack (0.5 mm pitch)
TQ = Thin Quad Flat Pack (0.5 mm pitch)
PQ = Plastic Quad Flat Pack (0.5 mm pitch)
FG = Fine Pitch Ball Grid Array (1.0 mm pitch)
CS = Chip Scale Package (0.5 mm pitch)

Speed Grade
Blank = Standard
1 = 15% Faster than Standard
2 = 25% Faster than Standard

Part Number

ProASIC3 Devices
A3P030 = 30,000 System Gates
A3P060 = 60,000 System Gates
A3P125 = 125,000 System Gates
A3P250 = 250,000 System Gates
A3P400 = 400,000 System Gates
A3P600 = 600,000 System Gates
A3P1000 = 1,000,000 System Gates

ProASIC3 Devices with Cortex-M1
M1A3P250 = 250,000 System Gates
M1A3P400 = 400,000 System Gates
M1A3P600 = 600,000 System Gates
M1A3P1000 = 1,000,000 System Gates

PROASIC 3 DEVICE STATUS

TABLE 4 • PROASIC 3 DEVICE STATUS

ProASIC 3 Devices	Status	Cortex-M1 Devices	Status
A3P030	Production		
A3P060	Production		
A3P125	Production		
A3P250	Production	M1A3P250	Production
A3P400	Production	M1A3P400	Production
A3P600	Production	M1A3P600	Production
A3P1000	Production	M1A3P1000	Production

TEMPERATURE GRADE OFFERINGS

Package	A3P015[1]	A3P030	A3P060	A3P125	A3P250	A3P400	A3P600	A3P1000
Cortex-M1 Devices					M1A3P250	M1A3P400	M1A3P600	M1A3P1000
QN48	—	C, I	—	—	—	—	—	—
QN68	C, I	C, I	—	—	—	—	—	—
QN132[2]	—	C, I	C, I	C, I	C, I	—	—	—
CS121	—	—	C, I	—	—	—	—	—
VQ100	—	C, I	C, I	C, I	C, I	—	—	—
TQ144	—	—	C, I	C, I	—	—	—	—
PQ208	—	—	—	C, I	C, I	C, I	C, I	C, I
FG144	—	—	C, I	C, I	C, I	C, I	C, I	C, I
FG256	—	—	—	—	C[3], I[3]	C, I	C, I	C, I
FG484	—	—	—	—	—	C, I	C, I	C, I

Note 1: A3P015 is not recommended for new designs.
2: Package not available
3: The M1A3P250 device does not support FG256 package.

C = Commercial temperature range: 0 °C to 85 °C junction temperature
I = Industrial temperature range: –40 °C to 100 °C junction temperature

SPEED GRADE AND TEMPERATURE GRADE MATRIX

Temperature Grade	Std.	–1	–2
C [1]	P	P	P
I [2]	P	P	P

Note 1: C = Commercial temperature range: 0 °C to 85 °C junction temperature
2: I = Industrial temperature range: –40 °C to 100 °C junction temperature

References made to ProASIC 3 devices also apply to ARM-enabled ProASIC 3 devices. The ARM-enabled part numbers start with M1 (Cortex-M1).

A3P015 and A3P030

The A3P015 and A3P030 are architecturally compatible; there are no RAM or PLL features.

DEVICES NOT RECOMMENDED FOR NEW DESIGNS

A3P015 is not recommended for new designs.

© 2023 Microchip Technology Inc. and its subsidiaries

Contents

Introduction 1
Features and Benefits 1
ProASIC 3 Ordering Information 5
ProASIC 3 Device Status 5
Temperature Grade Offerings 6
Speed Grade and Temperature Grade Matrix 6
Devices Not Recommended For New Designs 6
1.0 Features of ProASIC 3 DEVICE FAMILY 8
1.1 Flash Advantages 8
1.2 Advanced Flash Technology 9
1.3 Specifying I/O States During Programming 13
2.0 ProASIC 3 DC and Switching Characteristics 15
2.1 General Specifications 15
2.2 Calculating Power Dissipation 20
2.3 User I/O Characteristics 26
2.4 VersaTile Characteristics 89
2.5 Global Resource Characteristics 94
2.6 Clock Conditioning Circuits 98
2.7 Embedded SRAM and FIFO Characteristics 100
2.8 Embedded FlashROM Characteristics 113
2.9 JTAG 1532 Characteristics 113
3.0 Pin Descriptions 114
3.1 Supply Pins 114
3.2 User Pins 115
3.3 JTAG Pins 116
3.4 Special Function Pins 117
3.5 Related Documents 117
4.0 Package Pin Assignments 118
4.1 QN48 118
4.2 QN68 120
4.3 QN132 122
4.4 VQ100 130
4.5 TQ144 136
4.6 PQ208 141
4.7 FG144 152
4.8 FG256 165
4.9 FG484 178
Appendix A: Revision history 189
The Microchip WebSite 199
Customer Change Notification Service 199
Customer Support 199

1.0 FEATURES OF PROASIC 3 DEVICE FAMILY

The following sections describe important feature of the ProASIC 3 Device Family.

1.1 Flash Advantages

1.1.1 REDUCED COST OF OWNERSHIP

Advantages to the designer extend beyond low unit cost, performance, and ease of use. Unlike SRAM-based FPGAs, flash-based ProASIC 3 devices allow all functionality to be Instant On, no external boot PROM is required. On-board security mechanisms prevent access to all the programming information and enable secure remote updates of the FPGA logic. Designers can perform secure remote in-system reprogramming to support future design iterations and field upgrades with confidence that valuable Intellectual Property (IP) cannot be compromised or copied. Secure ISP can be performed using the industry-standard AES algorithm. The ProASIC 3 family device architecture mitigates the need for ASIC migration at higher user volumes. This makes the ProASIC 3 family a cost-effective ASIC replacement solution, especially for applications in the consumer, networking/ communications, computing, and avionics markets.

1.1.2 SECURITY

Nonvolatile, flash-based ProASIC 3 devices do not require a boot PROM, so there is no vulnerable external bitstream that can be easily copied. ProASIC 3 devices incorporate FlashLock, which provides a unique combination of reprogrammability and design security without external overhead, advantages that only an FPGA with nonvolatile flash programming can offer.

ProASIC 3 devices utilize a 128-bit flash-based lock and a separate AES key to provide the highest level of protection in the FPGA industry for intellectual property and configuration data. In addition, all FlashROM data in ProASIC 3 devices can be encrypted prior to loading, using the industry-leading AES-128 (FIPS192) bit block cipher encryption standard. The AES standard was adopted by the National Institute of Standards and Technology (NIST) in 2000 and replaces the 1977 DES standard. ProASIC 3 devices have a built-in AES decryption engine and a flash-based AES key that make them the most comprehensive programmable logic device security solution available today. ProASIC 3 devices with AES-based security provide a high level of protection for remote field updates over public networks such as the Internet, and are designed to ensure that valuable IP remains out of the hands of system overbuilders, system cloners, and IP thieves.

ARM-enabled ProASIC 3 devices do not support user-controlled AES security mechanisms. Since the ARM core must be protected at all times, AES encryption is always on for the core logic, so bitstreams are always encrypted. There is no user access to encryption for the FlashROM programming data.

Security, built into the FPGA fabric, is an inherent component of the ProASIC 3 family. The flash cells are located beneath seven metal layers, and many device design and layout techniques have been used to make invasive attacks extremely difficult. The ProASIC 3 family, with FlashLock and AES security, is unique in being highly resistant to both invasive and noninvasive attacks.
Your valuable IP is protected with industry-standard security, making remote ISP possible. A ProASIC 3 device provides the best available security for programmable logic designs.

1.1.3 SINGLE CHIP

Flash-based FPGAs store their configuration information in on-chip flash cells. Once programmed, the configuration data is an inherent part of the FPGA structure, and no external configuration data needs to be loaded at system power-up (unlike SRAM-based FPGAs). Therefore, flash-based ProASIC 3 FPGAs do not require system configuration components such as EEPROMs or microcontrollers to load device configuration data. This reduces bill-of-materials costs and PCB area, and increases security and system reliability.

1.1.4 INSTANT ON

Flash-based ProASIC 3 devices support Level 0 of the Instant On classification standard. This feature helps in system component initialization, execution of critical tasks before the processor wakes up, setup and configuration of memory blocks, clock generation, and bus activity management. The Instant On feature of flash-based ProASIC 3 devices greatly simplifies total system design and reduces total system cost, often eliminating the need for CPLDs and clock generation PLLs that are used for these purposes in a system. In addition, glitches and brownouts in system power will not corrupt the ProASIC 3 device's flash configuration, and unlike SRAM-based FPGAs, the device will not have to be reloaded when system power is restored. This enables the reduction or complete removal of the configuration PROM,

© 2023 Microchip Technology Inc. and its subsidiaries

expensive voltage monitor, brownout detection, and clock generator devices from the PCB design. Flash-based ProASIC 3 devices simplify total system design and reduce cost and design risk while increasing system reliability and improving system initialization time.

1.1.5 FIRM ERRORS

Firm errors occur most commonly when high-energy neutrons, generated in the upper atmosphere, strike a configuration cell of an SRAM FPGA. The energy of the collision can change the state of the configuration cell and thus change the logic, routing, or I/O behavior in an unpredictable way. These errors are impossible to prevent in SRAM FPGAs. The consequence of this type of error can be a complete system failure. Firm errors do not exist in the configuration memory of ProASIC 3 flash-based FPGAs. Once it is programmed, the flash cell configuration element of ProASIC 3 FPGAs cannot be altered by high-energy neutrons and is therefore immune to them. Recoverable (or soft) errors occur in the user data SRAM of all FPGA devices. These can easily be mitigated by using error detection and correction (EDAC) circuitry built into the FPGA fabric.

1.1.6 LOW POWER

Flash-based ProASIC 3 devices exhibit power characteristics similar to an ASIC, making them an ideal choice for power-sensitive applications. ProASIC 3 devices have only a very limited power-on current surge and no high-current transition period, both of which occur on many FPGAs.

ProASIC 3 devices also have low dynamic power consumption to further maximize power savings.

1.2 Advanced Flash Technology

The ProASIC 3 family offers many benefits, including nonvolatility and reprogrammability through an advanced flash-based, 130-nm LVCMOS process with seven layers of metal. Standard CMOS design techniques are used to implement logic and control functions. The combination of fine granularity, enhanced flexible routing resources, and abundant flash switches allows for very high logic utilization without compromising device routability or performance. Logic functions within the device are interconnected through a four-level routing hierarchy.

1.2.1 ADVANCED ARCHITECTURE

The proprietary ProASIC 3 architecture provides granularity comparable to standard-cell ASICs. The ProASIC 3 device consists of five distinct and programmable architectural features (Figure 1-1 and Figure 1-2):

- FPGA VersaTiles
- Dedicated FlashROM
- Dedicated SRAM/FIFO memory

Note: A3P030 does not support PLL or SRAM.

- Extensive CCCs and PLLs

Note: A3P030 does not support PLL or SRAM.

- Advanced I/O structure

The FPGA core consists of a sea of VersaTiles. Each VersaTile can be configured as a three-input logic function, a D-flip-flop (with or without enable), or a latch by programming the appropriate flash switch interconnections. The versatility of the ProASIC 3 core tile as either a three-input lookup table (LUT) equivalent or as a D-flip-flop/latch with enable allows for efficient use of the FPGA fabric. The VersaTile capability is unique to the Microchip ProASIC family of third-generation architecture flash FPGAs. VersaTiles are connected with any of the four levels of routing hierarchy. Flash switches are distributed throughout the device to provide nonvolatile, reconfigurable interconnect programming. Maximum core utilization is possible for virtually any design.

1.2.2 VERSATILES

The ProASIC 3 core consists of VersaTiles, which have been enhanced beyond the ProASIC$^{PLUS®}$ core tiles. The ProASIC 3 VersaTile supports the following:

- All 3-input logic functions—LUT-3 equivalent
- Latch with clear or set
- D-flip-flop with clear or set
- Enable D-flip-flop with clear or set

Refer to Figure 1-3 for VersaTile configurations.

FIGURE 1-1: PROASIC 3 DEVICE ARCHITECTURE OVERVIEW WITH TWO I/O BANKS (A3P030, A3P060, AND A3P125)

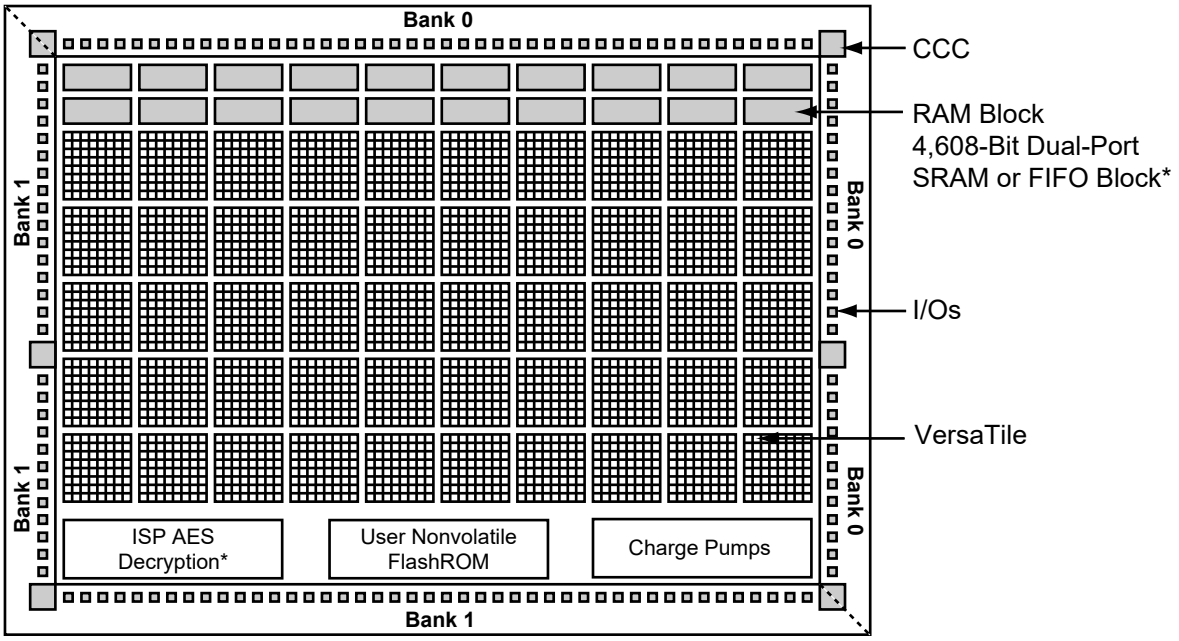

Note: Not supported by A3P030 devices

FIGURE 1-2: PROASIC 3 DEVICE ARCHITECTURE OVERVIEW WITH FOUR I/O BANKS (A3P250, A3P600, AND A3P1000)

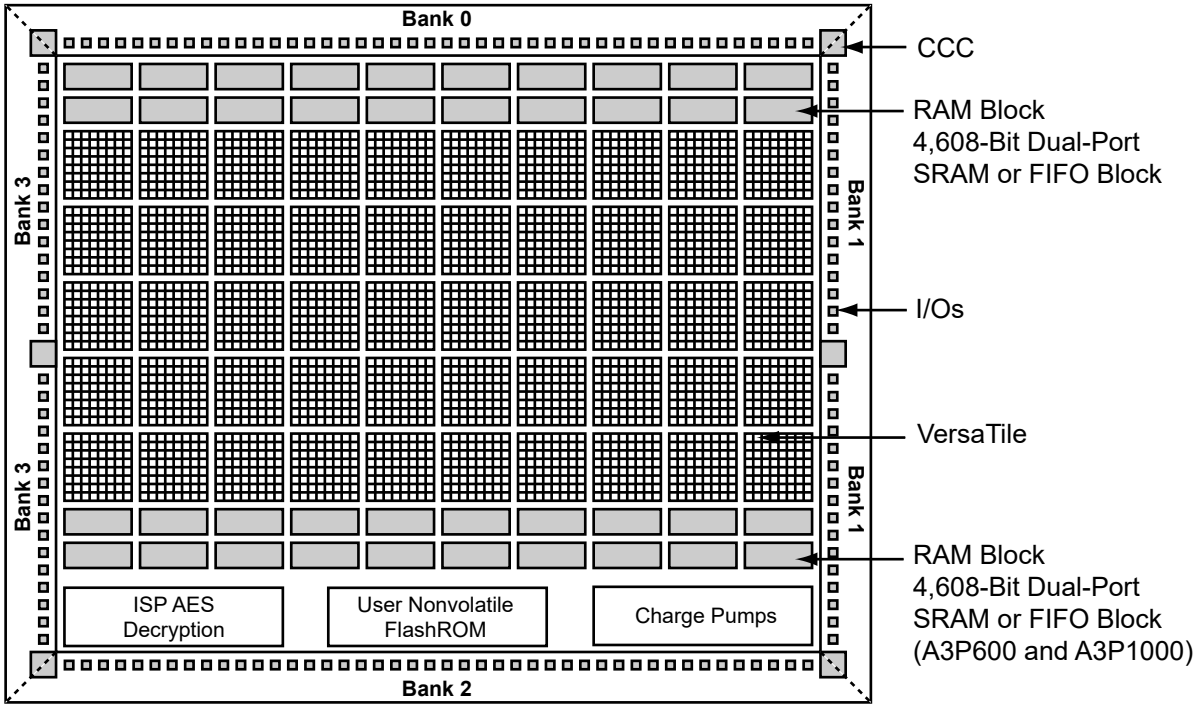

1.2.3 USER NONVOLATILE FLASHROM

ProASIC 3 devices have 1 kbit of on-chip, user-accessible, nonvolatile FlashROM. The FlashROM can be used in diverse system applications:

© 2023 Microchip Technology Inc. and its subsidiaries

FIGURE 1-3: VERSATILE CONFIGURATIONS

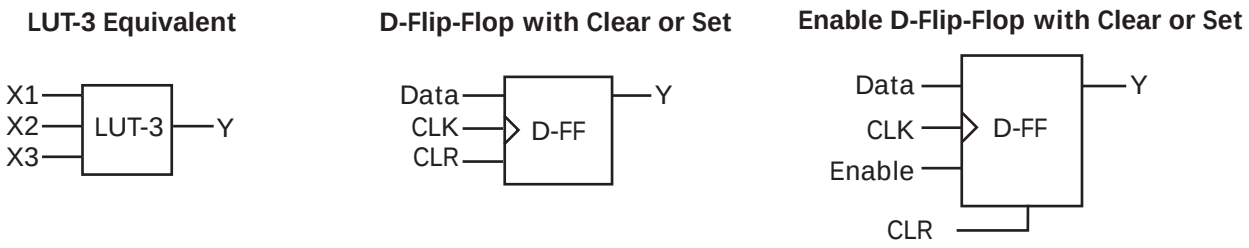

- Internet protocol addressing (wireless or fixed)
- System calibration settings
- Device serialization and/or inventory control
- Subscription-based business models (for example, set-top boxes)
- Secure key storage for secure communications algorithms
- Asset management/tracking
- Date stamping
- Version management

The FlashROM is written using the standard ProASIC 3 IEEE 1532 JTAG programming interface. The core can be individually programmed (erased and written), and on-chip AES decryption can be used selectively to securely load data over public networks (except in the A3P030 devices), as in security keys stored in the FlashROM for a user design.

The FlashROM can be programmed via the JTAG programming interface, and its contents can be read back either through the JTAG programming interface or via direct FPGA core addressing. Note that the FlashROM can only be programmed from the JTAG interface and cannot be programmed from the internal logic array.

The FlashROM is programmed as 8 banks of 128 bits; however, reading is performed on a byte-by-byte basis using a synchronous interface. A 7-bit address from the FPGA core defines which of the 8 banks and which of the 16 bytes within that bank are being read. The three most significant bits (MSBs) of the FlashROM address determine the bank, and the four least significant bits (LSBs) of the FlashROM address define the byte.

The ProASIC 3 development software solutions, Libero® System-on-Chip (SoC) and Designer, have extensive support for the FlashROM. One such feature is auto-generation of sequential programming files for applications requiring a unique serial number in each part. Another feature allows the inclusion of static data for system version control. Data for the FlashROM can be generated quickly and easily using Libero SoC and Designer software tools. Comprehensive programming file support is also included to allow for easy programming of large numbers of parts with differing FlashROM contents.

1.2.4 SRAM AND FIFO

ProASIC 3 devices (except the A3P030 devices) have embedded SRAM blocks along their north and south sides. Each variable-aspect-ratio SRAM block is 4,608 bits in size. Available memory configurations are 256×18, 512×9, 1k×4, 2k×2, and 4k×1 bits. The individual blocks have independent read and write ports that can be configured with different bit widths on each port. For example, data can be sent through a 4-bit port and read as a single bitstream. The embedded SRAM blocks can be initialized via the device JTAG port (ROM emulation mode) using the UJTAG macro (except in A3P030 devices).

In addition, every SRAM block has an embedded FIFO control unit. The control unit allows the SRAM block to be configured as a synchronous FIFO without using additional core VersaTiles. The FIFO width and depth are programmable. The FIFO also features programmable Almost Empty (AEMPTY) and Almost Full (AFULL) flags in addition to the normal Empty and Full flags. The embedded FIFO control unit contains the counters necessary for generation of the read and write address pointers. The embedded SRAM/FIFO blocks can be cascaded to create larger configurations.

1.2.5 PLL AND CCC

ProASIC 3 devices provide designers with very flexible clock conditioning capabilities. Each member of the ProASIC 3 family contains six CCCs. One CCC (center west side) has a PLL. The A3P030 devices do not have a PLL.

The six CCC blocks are located at the four corners and the centers of the east and west sides.

All six CCC blocks are usable; the four corner CCCs and the east CCC allow simple clock delay operations as well as clock spine access.

The inputs of the six CCC blocks are accessible from the FPGA core or from one of several inputs located near the CCC that have dedicated connections to the CCC block.

The CCC block has these key features:

- Wide input frequency range (f_{IN_CCC}) = 1.5 MHz to 350 MHz
- Output frequency range (f_{OUT_CCC}) = 0.75 MHz to 350 MHz
- Clock delay adjustment via programmable and fixed delays from –7.56 ns to +11.12 ns
- 2 programmable delay types for clock skew minimization
- Clock frequency synthesis (for PLL only)

Additional CCC specifications:

- Internal phase shift = 0°, 90°, 180°, and 270°. Output phase shift depends on the output divider configuration (for PLL only).
- Output duty cycle = 50% ± 1.5% or better (for PLL only)
- Low output jitter: worst case < 2.5% × clock period peak-to-peak period jitter when single global network used (for PLL only)
- Maximum acquisition time = 300 µs (for PLL only)
- Low power consumption of 5 mW
- Exceptional tolerance to input period jitter—allowable input jitter is up to 1.5 ns (for PLL only)
- Four precise phases; maximum misalignment between adjacent phases of 40 ps × (350 MHz / f_{OUT_CCC}) (for PLL only)

1.2.6 GLOBAL CLOCKING

ProASIC 3 devices have extensive support for multiple clocking domains. In addition to the CCC and PLL support described above, there is a comprehensive global clock distribution network.

Each VersaTile input and output port has access to nine VersaNets: six chip (main) and three quadrant global networks. The VersaNets can be driven by the CCC or directly accessed from the core via multiplexers (MUXes). The VersaNets can be used to distribute low-skew clock signals or for rapid distribution of high fanout nets.

1.2.7 I/OS WITH ADVANCED I/O STANDARDS

The ProASIC 3 family of FPGAs features a flexible I/O structure, supporting a range of voltages (1.5V, 1.8V, 2.5V, and 3.3V). ProASIC 3 FPGAs support many different I/O standards—single-ended and differential.

The I/Os are organized into banks, with two or four banks per device. The configuration of these banks determines the I/O standards supported (Table 1-1).

TABLE 1-1: I/O STANDARDS SUPPORTED

I/O Bank Type	Device and Bank Location	I/O Standards Supported		
		LVTTL/ LVCMOS	PCI/PCI-X	LVPECL, LVDS, B-LVDS, M-LVDS
Advanced	East and west Banks of A3P250 and larger devices	✓	✓	✓
Standard Plus	North and south banks of A3P250 and larger devices All banks of A3P060 and A3P125	✓	✓	Not supported
Standard	All banks of A3P030	✓	Not supported	Not supported

Each I/O module contains several input, output, and enable registers. These registers allow the implementation of the following:

- Single-Data-Rate applications

© 2023 Microchip Technology Inc. and its subsidiaries

- Double-Data-Rate applications—DDR LVDS, B-LVDS, and M-LVDS I/Os for point-to-point communications

ProASIC 3 banks for the A3P250 device and above support LVPECL, LVDS, B-LVDS and M-LVDS. B-LVDS and M-LVDS can support up to 20 loads.

Hot-swap (also called hot-plug, or hot-insertion) is the operation of hot-insertion or hot-removal of a card in a powered-up system.

Cold-sparing (also called cold-swap) refers to the ability of a device to leave system data undisturbed when the system is powered up, while the component itself is powered down, or when power supplies are floating.

1.2.8 WIDE RANGE I/O SUPPORT

ProASIC 3 devices support JEDEC-defined wide range I/O operation. ProASIC 3 supports the JESD8-B specification, covering both 3V and 3.3V supplies, for an effective operating range of 2.7V to 3.6V.

Wider I/O range means designers can eliminate power supplies or power conditioning components from the board or move to less costly components with greater tolerances. Wide range eases I/O bank management and provides enhanced protection from system voltage spikes, while providing the flexibility to easily run custom voltage applications.

1.3 Specifying I/O States During Programming

You can modify the I/O states during programming in FlashPro. In FlashPro, this feature is supported for PDB files generated from Designer v8.5 or greater. See the *FlashPro User's Guide* for more information.

Note: PDB files generated from Designer v8.1 to Designer v8.4 (including all service packs) have limited display of Pin Numbers only.

1. Load a PDB from the FlashPro GUI. You must have a PDB loaded to modify the I/O states during programming.
2. From the FlashPro GUI, click PDB Configuration. A FlashPoint – Programming File Generator window appears.
3. Click the Specify I/O States During Programming button to display the Specify I/O States During Programming dialog box.
4. Sort the pins as desired by clicking any of the column headers to sort the entries by that header. Select the I/Os you wish to modify (Figure 1-4).
5. Set the I/O Output State. You can set Basic I/O settings if you want to use the default I/O settings for your pins, or use Custom I/O settings to customize the settings for each pin. Basic I/O state settings:

   1 – I/O is set to drive out logic High

   0 – I/O is set to drive out logic Low

   Last Known State – I/O is set to the last value that was driven out prior to entering the programming mode, and then held at that value during programming

   Z -Tristate: I/O is tristated
6. Click OK to return to the FlashPoint – Programming File Generator window.

Note: I/O States During programming are saved to the ADB and resulting programming files after completing programming file generation.

FIGURE 1-4: I/O STATES DURING PROGRAMMING WINDOW

Specify I/O States During Programming

Load from file... Save to file... Show BSR Details

	Port Name	Macro Cell	Pin Number	I/O State (Output Only)
	BIST	ADLIB:INBUF	T2	1
	BYPASS_IO	ADLIB:INBUF	K1	1
	CLK	ADLIB:INBUF	B1	1
	ENOUT	ADLIB:INBUF	J16	1
	LED	ADLIB:OUTBUF	M3	0
	MONITOR[0]	ADLIB:OUTBUF	B5	0
	MONITOR[1]	ADLIB:OUTBUF	C7	Z
	MONITOR[2]	ADLIB:OUTBUF	D9	Z
	MONITOR[3]	ADLIB:OUTBUF	D7	Z
	MONITOR[4]	ADLIB:OUTBUF	A11	Z
	OEa	ADLIB:INBUF	E4	Z
	OEb	ADLIB:INBUF	F1	Z
	OSC_EN	ADLIB:INBUF	K3	Z
	PAD[10]	ADLIB:BIBUF_LVCMOS33U	M8	Z
	PAD[11]	ADLIB:BIBUF_LVCMOS33D	R7	Z
	PAD[12]	ADLIB:BIBUF_LVCMOS33U	D11	Z
	PAD[13]	ADLIB:BIBUF_LVCMOS33D	C12	Z
	PAD[14]	ADLIB:BIBUF_LVCMOS33U	R6	Z

Help OK Cancel

© 2023 Microchip Technology Inc. and its subsidiaries

2.0 PROASIC 3 DC AND SWITCHING CHARACTERISTICS

The following sections describe the DC and switching characteristics ProASIC 3 Device Family.

2.1 General Specifications

2.1.1 OPERATING CONDITIONS

Stresses beyond those listed in Table 2-1 may cause permanent damage to the device.

Exposure to absolute maximum rating conditions for extended periods may affect device reliability. Absolute Maximum Ratings are stress ratings only; functional operation of the device at these or any other conditions beyond those listed under the Recommended Operating Conditions specified in Table 2-2 is not implied.

TABLE 2-1: ABSOLUTE MAXIMUM RATINGS

Symbol	Parameter	Limits	Units
VCC	DC core supply voltage	–0.3 to 1.65	V
VJTAG	JTAG DC voltage	–0.3 to 3.75	V
VPUMP	Programming voltage	–0.3 to 3.75	V
VCCPLL	Analog power supply (PLL)	–0.3 to 1.65	V
VCCI	DC I/O output buffer supply voltage	–0.3 to 3.75	V
VMV	DC I/O input buffer supply voltage	–0.3 to 3.75	V
VI	I/O input voltage	–0.3V to 3.6V (when I/O hot insertion mode is enabled) –0.3V to (VCCI + 1 V) or 3.6V, whichever voltage is lower (when I/O hot-insertion mode is disabled)	V
T_{STG} [2]	Storage temperature	–65 to +150	°C
T_J [2]	Junction temperature	+125	°C

Note 1: The device should be operated within the limits specified by the datasheet. During transitions, the input signal may undershoot or overshoot according to the limits shown in Table 2-4.

2: VMV pins must be connected to the corresponding VCCI pins. See the Section 3.1.5 VMVx I/O Supply Voltage (quiet) for further information.

3: For flash programming and retention maximum limits, refer to Table 2-3, and for recommended operating limits, refer to Table 2-2.

TABLE 2-2: RECOMMENDED OPERATING CONDITIONS [1]

Symbol	Parameters [1]		Commercial	Industrial	Units
T_J	Junction temperature		0 to 85[2]	-40 to 100[2]	°C
VCC[3]	1.5V DC core supply voltage		1.425 to 1.575	1.425 to 1.575	V
VJTAG	JTAG DC voltage		1.4 to 3.6	1.4 to 3.6	V
VPUMP	Programming voltage	Programming Mode	3.15 to 3.45	3.15 to 3.45	V
		Operation [4]	0 to 3.6	0 to 3.6	V
VCCPLL	Analog power supply (PLL)		1.425 to 1.575	1.425 to 1.575	V

TABLE 2-2: RECOMMENDED OPERATING CONDITIONS [1] (CONTINUED)

Symbol	Parameters [1]	Commercial	Industrial	Units
VCCI and VMV [5]	1.5V DC supply voltage	1.425 to 1.575	1.425 to 1.575	V
	1.8V DC supply voltage	1.7 to 1.9	1.7 to 1.9	V
	2.5V DC supply voltage	2.3 to 2.7	2.3 to 2.7	V
	3.3V DC supply voltage	3.0 to 3.6	3.0 to 3.6	V
	3.3V wide range DC supply voltage [6]	2.7 to 3.6	2.7 to 3.6	V
	LVDS/B-LVDS/M-LVDS differential I/O	2.375 to 2.625	2.375 to 2.625	V
	LVPECL differential I/O	3.0 to 3.6	3.0 to 3.6	V

Note 1: All parameters representing voltages are measured with respect to GND unless otherwise specified.

2: Software Default Junction Temperature Range in the Libero® System-on-Chip (SoC) software is set to 0 °C to +70 °C for commercial, and -40 °C to +85 °C for industrial. To ensure targeted reliability standards are met across the full range of junction temperatures, Microchip recommends using custom settings for temperature range before running timing and power analysis tools. For more information regarding custom settings, refer to the New Project Dialog Box in the Libero SoC Online Help.

3: The ranges given here are for power supplies only. The recommended input voltage ranges specific to each I/O standard are given in Table 2-18.

4: VPUMP can be left floating during operation (not programming mode).

5: VMV and VCCI should be at the same voltage within a given I/O bank. VMV pins must be connected to the corresponding VCCI pins. See the Section 3.1.5 VMVx I/O Supply Voltage (quiet) for further information.

6: 3.3V wide range is compliant to the JESD8-B specification and supports 3.0V VCCI operation.

FIGURE 2-1: HIGH-TEMPERATURE DATA RETENTION (HTR)

Tj (°C)	HTR Lifetime (yrs)
70	102.7
85	43.8
100	20.0
105	15.6
110	12.3
115	9.7
120	7.7
125	6.2
130	5.0
135	4.0
140	3.3
145	2.7
150	2.2

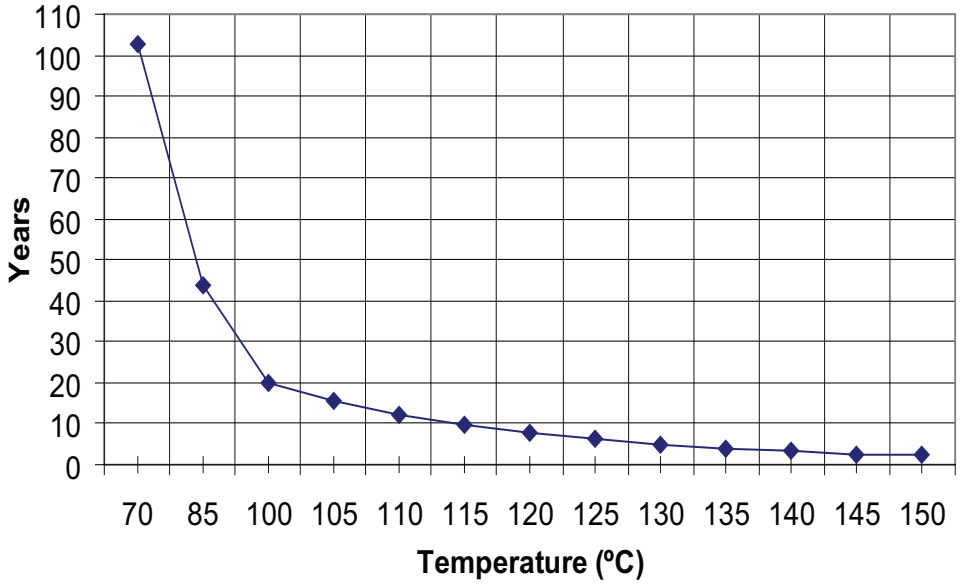

Note: HTR time is the period during which you would not expect a verify failure due to flash cell leakage.

© 2023 Microchip Technology Inc. and its subsidiaries

TABLE 2-3: FLASH PROGRAMMING LIMITS—RETENTION, STORAGE AND OPERATING TEMPERATURE

Product Grade	Programming Cycles	Program Retention (biased/unbiased)	Maximum Storage Temperature T_{STG} (°C)	Maximum Operating Junction Temperature T_J (°C)
Commercial	500	20 years	110	100
Industrial	500	20 years	110	100

Note 1: This is a stress rating only; functional operation at any condition other than those indicated is not implied.

2: These limits apply for program/data retention only. Refer to Table 2-1and Table 2-2 for device operating conditions and absolute limits.

TABLE 2-4: OVERSHOOT AND UNDERSHOOT LIMITS [1]

VCCI and VMV	Average VCCI–GND Overshoot or Undershoot Duration as a Percentage of Clock Cycle[2]	Maximum Overshoot/ Undershoot[2]
2.7V or less	10%	1.4V
	5%	1.49V
3V	10%	1.1V
	5%	1.19V
3.3V	10%	0.79V
	5%	0.88V
3.6V	10%	0.45V
	5%	0.54V

Note 1: Based on reliability requirements at 85 °C.

2: The duration is allowed at one out of six clock cycles. If the overshoot/undershoot occurs at one out of two cycles, the maximum overshoot/undershoot has to be reduced by 0.15V.

3: This table does not provide PCI overshoot/undershoot limits.

2.1.2 I/O POWER-UP AND SUPPLY VOLTAGE THRESHOLDS FOR POWER-ON RESET (COMMERCIAL AND INDUSTRIAL)

Sophisticated power-up management circuitry is designed into every ProASIC 3 device. These circuits ensure easy transition from the powered-off state to the powered-up state of the device. The many different supplies can power up in any sequence with minimized current spikes or surges.

In addition, the I/O will be in a known state through the power-up sequence. The basic principle is shown in Figure 2-2.

There are five regions to consider during power-up.

ProASIC 3 I/Os are activated only if ALL of the following three conditions are met:

1. VCC and VCCI are above the minimum specified trip points (Figure 2-2).
2. VCCI > VCC – 0.75V (typical)
3. Chip is in the operating mode.

VCCI Trip Point:
Ramping up: 0.6V < trip_point_up < 1.2V
Ramping down: 0.5V < trip_point_down < 1.1V

VCC Trip Point:
Ramping up: 0.6V < trip_point_up < 1.1V
Ramping down: 0.5V < trip_point_down < 1V

VCC and VCCI ramp-up trip points are about 100 mV higher than ramp-down trip points. This specifically built-in hysteresis prevents undesirable power-up oscillations and current surges. Note the following:

- During programming, I/Os become tristated and weakly pulled up to VCCI.
- JTAG supply, PLL power supplies, and charge pump VPUMP supply have no influence on I/O behavior.

2.1.2.1 PLL Behavior at Brownout Condition

Microchip recommends using monotonic power supplies or voltage regulators to ensure proper power-up behavior. Power ramp-up should be monotonic at least until VCC and VCCPLLX exceed brownout activation levels. The VCC activation level is specified as 1.1V worst-case (see Figure 2-2 for more details).

When PLL power supply voltage and/or VCC levels drop below the VCC brownout levels (0.75V ± 0.25V), the PLL output lock signal goes low and/or the output clock is lost. Refer to the "Power-Up/Down Behavior of Low Power Flash Devices" chapter of the *ProASIC 3 FPGA Fabric User's Guide* for information on clock and lock recovery.

2.1.2.2 Internal Power-Up Activation Sequence

1. Core
2. Input buffers

Output buffers, after 200 ns delay from input buffer activation.

FIGURE 2-2: I/O STATE AS A FUNCTION OF VCCI AND VCC VOLTAGE LEVELS

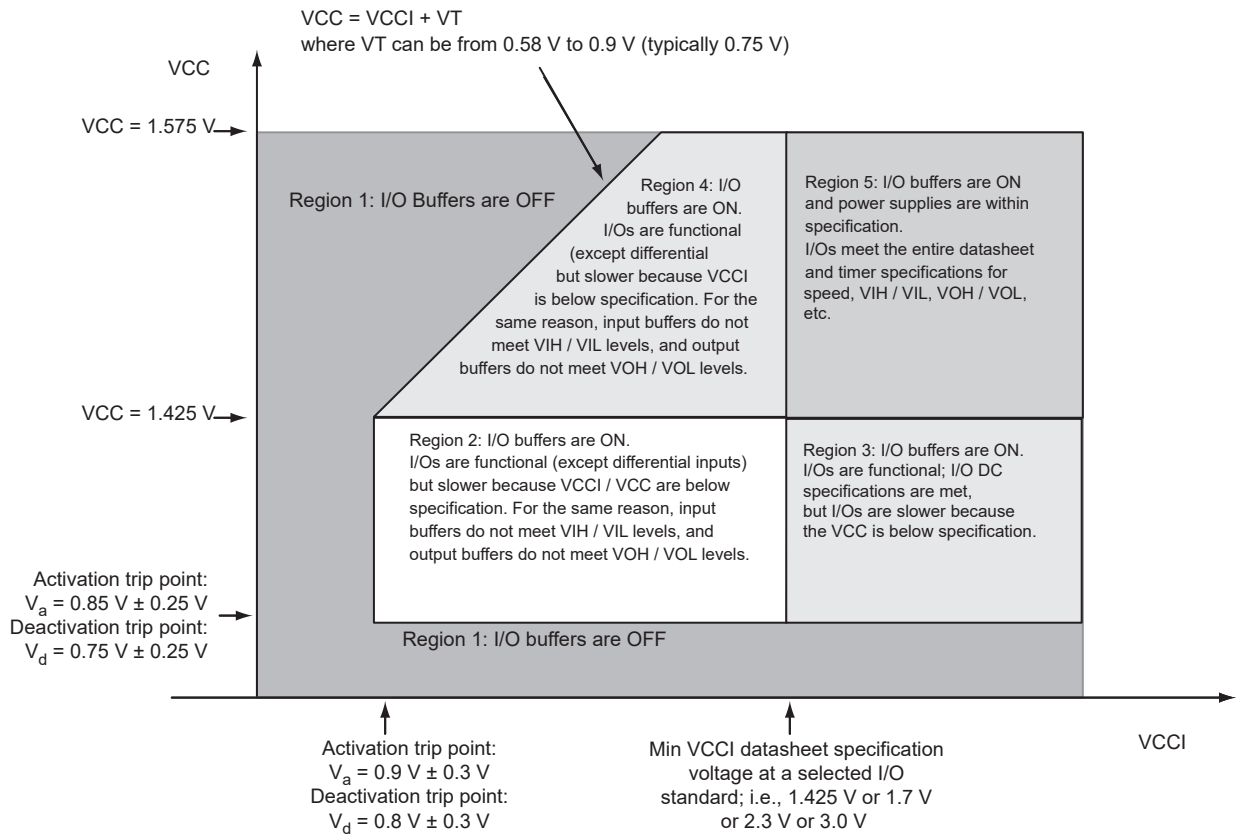

© 2023 Microchip Technology Inc. and its subsidiaries

2.1.3 THERMAL CHARACTERISTICS

2.1.3.1 Introduction

The temperature variable in the Microchip Designer software refers to the junction temperature, not the ambient temperature. This is an important distinction because dynamic and static power consumption cause the chip junction to be higher than the ambient temperature.

EQ can be used to calculate junction temperature.

T_J = Junction Temperature = $\Delta T + T_A$

where:

T_A = Ambient Temperature

ΔT = Temperature gradient between junction (silicon) and ambient $\Delta T = \theta_{ja} * P$

θ_{ja} = Junction-to-ambient of the package. θ_{ja} numbers are located in Table 2-5.

P = Power dissipation

2.1.3.2 Package Thermal Characteristics

The device junction-to-case thermal resistivity is θ_{jc} and the junction-to-ambient air thermal resistivity is θ_{ja}. The thermal characteristics for θ_{ja} are shown for two air flow rates.

The absolute maximum junction temperature is 100 °C. EQ 1 shows a sample calculation of the absolute maximum power dissipation allowed for a 484-pin FBGA package at commercial temperature and in still air.

$$\text{Maximum Power Allowed} = \frac{\text{Max. junction temp. } (°C) - \text{Max. ambient temp. } (°C)}{\theta_{ja}(°C/W)} = \frac{100°C - 70°C}{20.5°C/W} = 1.463\dot{W}$$

EQ 1

TABLE 2-5: PACKAGE THERMAL RESISTIVITIES

Package Type	Device	Pin Count	θ_{jc}	θ_{ja}			Units
				Still Air	200 ft/min	500 ft/min	
Quad Flat No Lead	A3P030	132	0.4	21.4	16.8	15.3	°C/W
	A3P060	132	0.3	21.2	16.6	15.0	°C/W
	A3P125	132	0.2	21.1	16.5	14.9	°C/W
	A3P250	132	0.1	21.0	16.4	14.8	°C/W
Very Thin Quad Flat Pack (VQFP)	All devices	100	10.0	35.3	29.4	27.1	°C/W
Thin Quad Flat Pack (TQFP)	All devices	144	11.0	33.5	28.0	25.7	°C/W
Plastic Quad Flat Pack (PQFP)	All devices	208	8.0	26.1	22.5	20.8	°C/W
Fine Pitch Ball Grid Array (FBGA)	See note*	144	3.8	26.9	22.9	21.5	°C/W
	See note*	256	3.8	26.6	22.8	21.5	°C/W
	See note*	484	3.2	20.5	17.0	15.9	°C/W
	A3P1000	144	6.3	31.6	26.2	24.2	°C/W
	A3P1000	256	6.6	28.1	24.4	22.7	°C/W
	A3P1000	484	8.0	23.3	19.0	16.7	°C/W

Note: *This information applies to all ProASIC 3 devices except the A3P1000. Detailed device/package thermal information will be available in future revisions of the datasheet.

2.1.3.3 Temperature and Voltage Derating Factors

TABLE 2-6: TEMPERATURE AND VOLTAGE DERATING FACTORS FOR TIMING DELAYS (NORMALIZED TO T_J = 70 °C, VCC = 1.425V)

Array Voltage VCC (V)	Junction Temperature (°C)					
	–40 °C	0 °C	25 °C	70 °C	85 °C	100 °C
1.425	0.88	0.93	0.95	1.00	1.02	1.04
1.500	0.83	0.88	0.90	0.95	0.96	0.98
1.575	0.80	0.84	0.87	0.91	0.93	0.94

2.2 Calculating Power Dissipation

2.2.1 QUIESCENT SUPPLY CURRENT

TABLE 2-7: QUIESCENT SUPPLY CURRENT CHARACTERISTICS

	A3P030	A3P060	A3P125	A3P250	A3P400	A3P600	A3P1000
Typical (25 °C)	2 mA	2 mA	2 mA	3 mA	3 mA	5 mA	8 mA
Max. (Commercial)	10 mA	10 mA	10 mA	20 mA	20 mA	30 mA	50 mA
Max. (Industrial)	15 mA	15 mA	15 mA	30 mA	30 mA	45 mA	75 mA

Note: IDD Includes VCC, VPUMP, VCCI, and VMV currents. Values do not include I/O static contribution, which is shown in Table 2-11 and Table 2-12.

2.2.2 POWER PER I/O PIN

TABLE 2-8: SUMMARY OF I/O INPUT BUFFER POWER (PER PIN)—DEFAULT I/O SOFTWARE SETTINGS APPLICABLE TO ADVANCED I/O BANKS

	VMV (V)	Static Power P_{DC2} (mW) [1]	Dynamic Power PAC9 (µW/MHz) [2]
Single-Ended			
3.3V LVTTL / 3.3V LVCMOS	3.3	—	16.22
3.3V LVCMOS Wide Range[3]	3.3	—	16.22
2.5V LVCMOS	2.5	—	5.12
1.8V LVCMOS	1.8	—	2.13
1.5V LVCMOS (JESD8-11)	1.5	—	1.45
3.3V PCI	3.3	—	18.11
3.3V PCI-X	3.3	—	18.11
Differential			
LVDS	2.5	2.26	1.20
LVPECL	3.3	5.72	1.87

Note 1: PDC2 is the static power (where applicable) measured on VMV.
2: PAC9 is the total dynamic power measured on VCC and VMV.
3: All LVCMOS 3.3V software macros support LVCMOS 3.3V wide range as specified in the JESD8-B specification.

© 2023 Microchip Technology Inc. and its subsidiaries

TABLE 2-9: SUMMARY OF I/O INPUT BUFFER POWER (PER PIN)—DEFAULT I/O SOFTWARE SETTINGS APPLICABLE TO STANDARD PLUS I/O BANKS

	VMV (V)	Static Power PDC2 (mW) [1]	Dynamic Power PAC9 (µW/MHz) [2]
Single-Ended			
3.3V LVTTL / 3.3V LVCMOS	3.3	–	16.23
3.3V LVCMOS Wide Range[3]	3.3	–	16.23
2.5V LVCMOS	2.5	–	5.14
1.8V LVCMOS	1.8	–	2.13
1.5V LVCMOS (JESD8-11)	1.5	–	1.48
3.3V PCI	3.3	–	18.13
3.3V PCI-X	3.3	–	18.13

Note 1: PDC2 is the static power (where applicable) measured on VMV.
2: PAC9 is the total dynamic power measured on VCC and VMV.
3: All LVCMOS 3.3V software macros support LVCMOS 3.3V wide range as specified in the JESD8-B specification.

TABLE 2-10: SUMMARY OF I/O INPUT BUFFER POWER (PER PIN) – DEFAULT I/O SOFTWARE SETTINGS APPLICABLE TO STANDARD I/O BANKS

	VMV (V)	Static Power PDC2 (mW) [1]	Dynamic Power PAC9 (µW/MHz) [2]
Single-Ended			
3.3V LVTTL / 3.3V LVCMOS	3.3	—	17.24
3.3V LVCMOS Wide Range[3]	3.3	—	17.24
2.5V LVCMOS	2.5	—	5.19
1.8V LVCMOS	1.8	—	2.18
1.5V LVCMOS (JESD8-11)	1.5	—	1.52

Note 1: PDC2 is the static power (where applicable) measured on VMV.
2: PAC9 is the total dynamic power measured on VCC and VMV.
3: All LVCMOS 3.3V software macros support LVCMOS 3.3V wide range as specified in the JESD8-B specification.

TABLE 2-11: SUMMARY OF I/O OUTPUT BUFFER POWER (PER PIN) – DEFAULT I/O SOFTWARE SETTINGS[1] APPLICABLE TO ADVANCED I/O BANKS

	C_{LOAD} (pF)	VCCI (V)	Static Power PDC3 (mW)[2]	Dynamic Power PAC10 (µW/MHz)[3]
Single-Ended				
3.3V LVTTL / 3.3V LVCMOS	35	3.3	—	468.67
3.3V LVCMOS Wide Range[4]	35	3.3	—	468.67
2.5V LVCMOS	35	2.5	—	267.48
1.8V LVCMOS	35	1.8	—	149.46

TABLE 2-11: SUMMARY OF I/O OUTPUT BUFFER POWER (PER PIN) – DEFAULT I/O SOFTWARE SETTINGS[1] APPLICABLE TO ADVANCED I/O BANKS

	C_{LOAD} (pF)	VCCI (V)	Static Power PDC3 (mW)[2]	Dynamic Power PAC10 (µW/MHz)[3]
1.5V LVCMOS (JESD8-11)	35	1.5	—	103.12
3.3V PCI	10	3.3	—	201.02
3.3V PCI-X	10	3.3	—	201.02
Differential				
LVDS	—	2.5	7.74	88.92
LVPECL	—	3.3	19.54	166.52

Note 1: Dynamic power consumption is given for standard load and software default drive strength and output slew.

2: PDC3 is the static power (where applicable) measured on VCCI.

3: PAC10 is the total dynamic power measured on VCC and VCCI.

4: All LVCMOS 3.3V software macros support LVCMOS 3.3V wide range as specified in the JESD8-B specification.

TABLE 2-12: SUMMARY OF I/O OUTPUT BUFFER POWER (PER PIN) – DEFAULT I/O SOFTWARE SETTINGS[1] APPLICABLE TO STANDARD PLUS I/O BANKS

	C_{LOAD} (pF)	VCCI (V)	Static Power PDC3 (mW)[2]	Dynamic Power PAC10 (µW/MHz)[3]
Single-Ended				
3.3V LVTTL / 3.3 V LVCMOS	35	3.3	—	452.67
3.3V LVCMOS Wide Range[4]	35	3.3	—	452.67
2.5V LVCMOS	35	2.5	—	258.32
1.8V LVCMOS	35	1.8	—	133.59
1.5V LVCMOS (JESD8-11)	35	1.5	—	92.84
3.3V PCI	10	3.3	—	184.92
3.3V PCI-X	10	3.3	—	184.92

Note 1: Dynamic power consumption is given for standard load and software default drive strength and output slew.

2: P_{DC3} is the static power (where applicable) measured on VMV.

3: P_{AC10} is the total dynamic power measured on VCC and VMV.

4: All LVCMOS 3.3V software macros support LVCMOS 3.3V wide range as specified in the JESD8-B specification.

© 2023 Microchip Technology Inc. and its subsidiaries

TABLE 2-13: SUMMARY OF I/O OUTPUT BUFFER POWER (PER PIN) – DEFAULT I/O SOFTWARE SETTINGS [1] APPLICABLE TO STANDARD I/O BANKS

	C_{LOAD} (pF)	VCCI (V)	Static Power PDC3 (mW) [2]	Dynamic Power PAC10 (µW/MHz) [3]
Single-Ended				
3.3V LVTTL / 3.3 V LVCMOS	35	3.3	—	431.08
3.3V LVCMOS Wide Range[4]	35	3.3	—	431.08
2.5V LVCMOS	35	2.5	—	247.36
1.8V LVCMOS	35	1.8	—	128.46
1.5V LVCMOS (JESD8-11)	35	1.5	—	89.46

Note 1: Dynamic power consumption is given for standard load and software default drive strength and output slew.

2: P_{DC3} is the static power (where applicable) measured on VCCI.

3: P_{AC10} is the total dynamic power measured on VCC and VCCI.

4: All LVCMOS 3.3V software macros support LVCMOS 3.3V wide range as specified in the JESD8-B specification.

2.2.3 POWER CONSUMPTION OF VARIOUS INTERNAL RESOURCES

TABLE 2-14: DIFFERENT COMPONENTS CONTRIBUTING TO DYNAMIC POWER CONSUMPTION IN PROASIC 3 DEVICES

Parameter	Definition	Device Specific Dynamic Contributions (µW/MHz)						
		A3P1000	A3P600	A3P400	A3P250	A3P125	A3P060	A3P030
PAC1	Clock contribution of a Global Rib	14.50	12.80	12.80	11.00	11.00	9.30	9.30
PAC2	Clock contribution of a Global Spine	2.48	1.85	1.35	1.58	0.81	0.81	0.41
PAC3	Clock contribution of a VersaTile row	0.81						
PAC4	Clock contribution of a VersaTile used as a sequential module	0.12						
PAC5	First contribution of a VersaTile used as a sequential module	0.07						
PAC6	Second contribution of a VersaTile used as a sequential module	0.29						
PAC7	Contribution of a VersaTile used as a combinatorial Module	0.29						
PAC8	Average contribution of a routing net	0.70						
PAC9	Contribution of an I/O input pin (standard dependent)	See Table 2-8 through Table 2-10.						
PAC10	Contribution of an I/O output pin (standard dependent)	See Table 2-11 through Table 2-13.						
PAC11	Average contribution of a RAM block during a read operation	25.00						

TABLE 2-14: DIFFERENT COMPONENTS CONTRIBUTING TO DYNAMIC POWER CONSUMPTION IN PROASIC 3 DEVICES

PAC12	Average contribution of a RAM block during a write operation	30.00
PAC13	Dynamic contribution for PLL	2.60

Note: *For a different output load, drive strength, or slew rate, Microchip recommends using the Microchip Power spreadsheet calculator or SmartPower tool in Libero SoC software.

TABLE 2-15: DIFFERENT COMPONENTS CONTRIBUTING TO THE STATIC POWER CONSUMPTION IN PROASIC 3 DEVICES

Parameter	Definition	Device Specific Static Power (mW)						
		A3P1000	A3P600	A3P400	A3P250	A3P125	A3P060	A3P030
PDC1	Array static power in Active mode	See Table 2-7.						
PDC2	I/O input pin static power (standard-dependent)	See Table 2-8 through Table 2-10.						
PDC3	I/O output pin static power (standard-dependent)	See Table 2-11 through Table 2-13.						
PDC4	Static PLL contribution	2.55 mW						
PDC5	Bank quiescent power (VCCI-dependent)	See Table 2-7.						

Note: *For a different output load, drive strength, or slew rate, Microchip recommends using the Microchip Power spreadsheet calculator or SmartPower tool in Libero SoC software.

2.2.4 POWER CALCULATION METHODOLOGY

This section describes a simplified method to estimate power consumption of an application. For more accurate and detailed power estimations, use the SmartPower tool in Libero SoC software.

The power calculation methodology described below uses the following variables:

- The number of PLLs as well as the number and the frequency of each output clock generated
- The number of combinatorial and sequential cells used in the design
- The internal clock frequencies
- The number and the standard of I/O pins used in the design
- The number of RAM blocks used in the design
- Toggle rates of I/O pins as well as VersaTiles—guidelines are provided in Table 2-16.
- Enable rates of output buffers—guidelines are provided for typical applications in Table 2-17.
- Read rate and write rate to the memory—guidelines are provided for typical applications in Table 2-17. The calculation should be repeated for each clock domain defined in the design.

2.2.4.1 Methodology

2.2.4.1.1 Total Power Consumption—P_{TOTAL}

$P_{TOTAL} = P_{STAT} + P_{DYN}$

P_{STAT} is the total static power consumption.

P_{DYN} is the total dynamic power consumption.

2.2.4.1.2 Total Static Power Consumption—P_{STAT}

$P_{STAT} = P_{DC1} + N_{INPUTS}^{*} P_{DC2} + N_{OUTPUTS}^{*} P_{DC3}$

N_{INPUTS} is the number of I/O input buffers used in the design.

$N_{OUTPUTS}$ is the number of I/O output buffers used in the design.

© 2023 Microchip Technology Inc. and its subsidiaries

2.2.4.1.3 Total Dynamic Power Consumption—P_{DYN}

$P_{DYN} = P_{CLOCK} + P_{S\text{-}CELL} + P_{C\text{-}CELL} + P_{NET} + P_{INPUTS} + P_{OUTPUTS} + P_{MEMORY} + P_{PLL}$

2.2.4.1.4 Global Clock Contribution—P_{CLOCK}

$P_{CLOCK} = (P_{AC1} + N_{SPINE}*P_{AC2} + N_{ROW}*P_{AC3} + N_{S\text{-}CELL}* P_{AC4}) * F_{CLK}$

N_{SPINE} is the number of global spines used in the user design—guidelines are provided in the "Spine Architecture" section of the Global Resources chapter in the ProASIC 3 FPGA Fabric User's Guide.

N_{ROW} is the number of VersaTile rows used in the design—guidelines are provided in the "Spine Architecture" section of the Global Resources chapter in the ProASIC 3 FPGA Fabric User's Guide.

F_{CLK} is the global clock signal frequency.

$N_{S\text{-}CELL}$ is the number of VersaTiles used as sequential modules in the design.

P_{AC1}, P_{AC2}, P_{AC3}, and P_{AC4} are device-dependent.

2.2.4.1.5 Sequential Cells Contribution—$P_{S\text{-}CELL}$

$P_{S\text{-}CELL} = N_{S\text{-}CELL} * (P_{AC5} + \alpha_1 / 2 * P_{AC6}) * F_{CLK}$

$N_{S\text{-}CELL}$ is the number of VersaTiles used as sequential modules in the design. When a multi-tile sequential cell is used, it should be accounted for as 1.

α_1 is the toggle rate of VersaTile outputs—guidelines are provided in Table 2-16.

F_{CLK} is the global clock signal frequency.

2.2.4.1.6 Combinatorial Cells Contribution—$P_{C\text{-}CELL}$

$P_{C\text{-}CELL} = N_{C\text{-}CELL}* \alpha_1 / 2 * P_{AC7} * F_{CLK}$

$N_{C\text{-}CELL}$ is the number of VersaTiles used as combinatorial modules in the design.

α_1 is the toggle rate of VersaTile outputs—guidelines are provided in Table 2-16.

F_{CLK} is the global clock signal frequency.

2.2.4.1.7 Routing Net Contribution—P_{NET}

$P_{NET} = (N_{S\text{-}CELL} + N_{C\text{-}CELL}) * \alpha_1 / 2 * P_{AC8} * F_{CLK}$

$N_{S\text{-}CELL}$ is the number of VersaTiles used as sequential modules in the design.

$N_{C\text{-}CELL}$ is the number of VersaTiles used as combinatorial modules in the design.

α_1 is the toggle rate of VersaTile outputs—guidelines are provided in Table 2-16.

F_{CLK} is the global clock signal frequency.

2.2.4.1.8 I/O Input Buffer Contribution—P_{INPUTS}

$P_{INPUTS} = N_{INPUTS} * \alpha_2 / 2 * P_{AC9} * F_{CLK}$

N_{INPUTS} is the number of I/O input buffers used in the design.

α_2 is the I/O buffer toggle rate—guidelines are provided in Table 2-16.

F_{CLK} is the global clock signal frequency.

2.2.4.1.9 I/O Output Buffer Contribution—$P_{OUTPUTS}$

$P_{OUTPUTS} = N_{OUTPUTS} * \alpha_2 / 2 * \beta_1 * P_{AC10} * F_{CLK}$

$N_{OUTPUTS}$ is the number of I/O output buffers used in the design.

α_2 is the I/O buffer toggle rate—guidelines are provided in Table 2-16.

β_1 is the I/O buffer enable rate—guidelines are provided in Table 2-17.

F_{CLK} is the global clock signal frequency.

2.2.4.1.10 RAM Contribution—P_{MEMORY}

$P_{MEMORY} = P_{AC11} * N_{BLOCKS} * F_{READ\text{-}CLOCK} * \beta_2 + P_{AC12} * N_{BLOCK} * F_{WRITE\text{-}CLOCK} * \beta_3$

N_{BLOCKS} is the number of RAM blocks used in the design.

$F_{READ\text{-}CLOCK}$ is the memory read clock frequency.

β_2 is the RAM enable rate for read operations.

$F_{WRITE\text{-}CLOCK}$ is the memory write clock frequency.

β_3 is the RAM enable rate for write operations—guidelines are provided in Table 2-17.

2.2.4.1.11 PLL Contribution—P_{PLL}

$P_{PLL} = P_{DC4} + P_{AC13} * F_{CLKOUT}$

F_{CLKOUT} is the output clock frequency.

Note: The PLL dynamic contribution depends on the input clock frequency, the number of output clock signals generated by the PLL, and the frequency of each output clock. If a PLL is used to generate more than one output clock, include each output clock in the formula by adding its corresponding contribution (P_{AC14} * F_{CLKOUT} product) to the total PLL contribution.

2.2.4.2 Guidelines

2.2.4.2.1 Toggle Rate Definition

A toggle rate defines the frequency of a net or logic element relative to a clock. It is a percentage. If the toggle rate of a net is 100%, this means that this net switches at half the clock frequency. Below are some examples:

- The average toggle rate of a shift register is 100% because all flip-flop outputs toggle at half of the clock frequency.
- The average toggle rate of an 8-bit counter is 25%:
  - Bit 0 (LSB) = 100%
  - Bit 1 = 50%
  - Bit 2 = 25%
  - …
  - Bit 7 (MSB) = 0.78125%
  - Average toggle rate = (100% + 50% + 25% + 12.5% + . . . + 0.78125%) / 8

2.2.4.2.2 Enable Rate Definition

Output enable rate is the average percentage of time during which tristate outputs are enabled. When nontristate output buffers are used, the enable rate should be 100%.

TABLE 2-16: TOGGLE RATE GUIDELINES RECOMMENDED FOR POWER CALCULATION

Component	Definition	Guideline
α_1	Toggle rate of VersaTile outputs	10%
α_2	I/O buffer toggle rate	10%

TABLE 2-17: ENABLE RATE GUIDELINES RECOMMENDED FOR POWER CALCULATION

Component	Definition	Guideline
β_1	I/O output buffer enable rate	100%
β_2	RAM enable rate for read operations	12.5%
β_3	RAM enable rate for write operations	12.5%

2.3 User I/O Characteristics

2.3.1 TIMING MODEL

© 2023 Microchip Technology Inc. and its subsidiaries

FIGURE 2-3: TIMING MODEL OPERATING CONDITIONS: –2 SPEED, COMMERCIAL TEMPERATURE RANGE (T_J = 70 °C), WORST CASE VCC = 1.425V

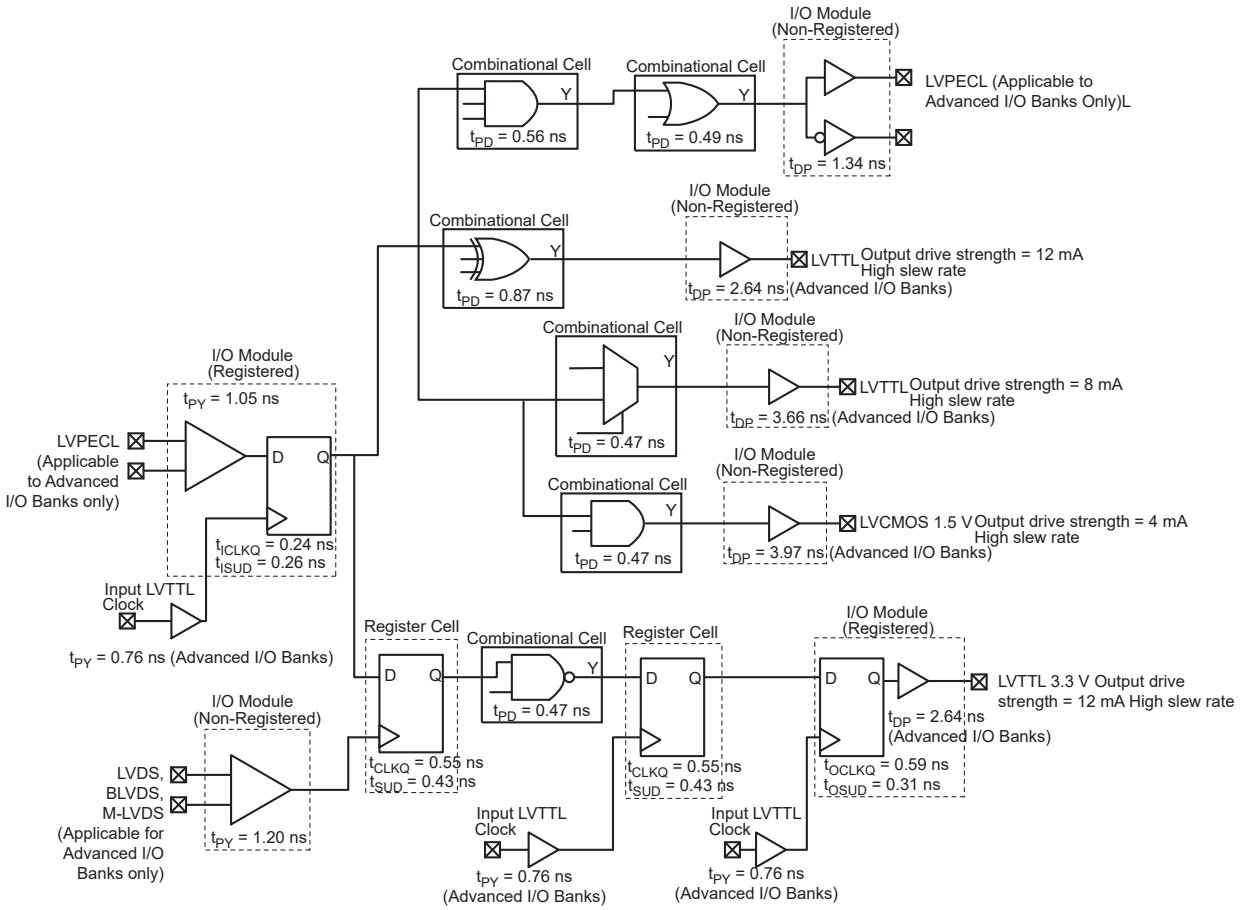

FIGURE 2-4: INPUT BUFFER TIMING MODEL AND DELAYS (EXAMPLE)

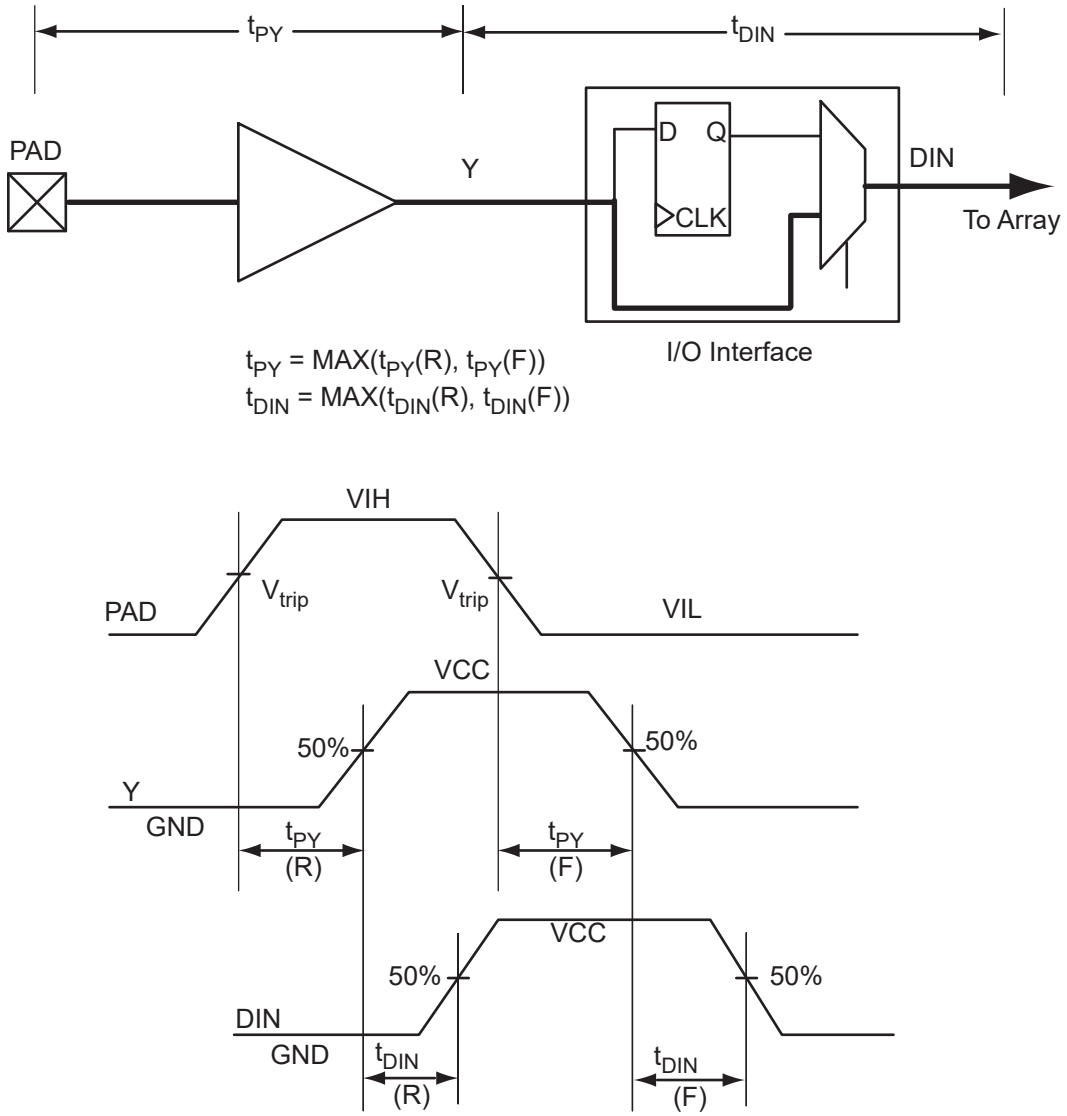

© 2023 Microchip Technology Inc. and its subsidiaries

FIGURE 2-5: OUTPUT BUFFER MODEL AND DELAYS (EXAMPLE)

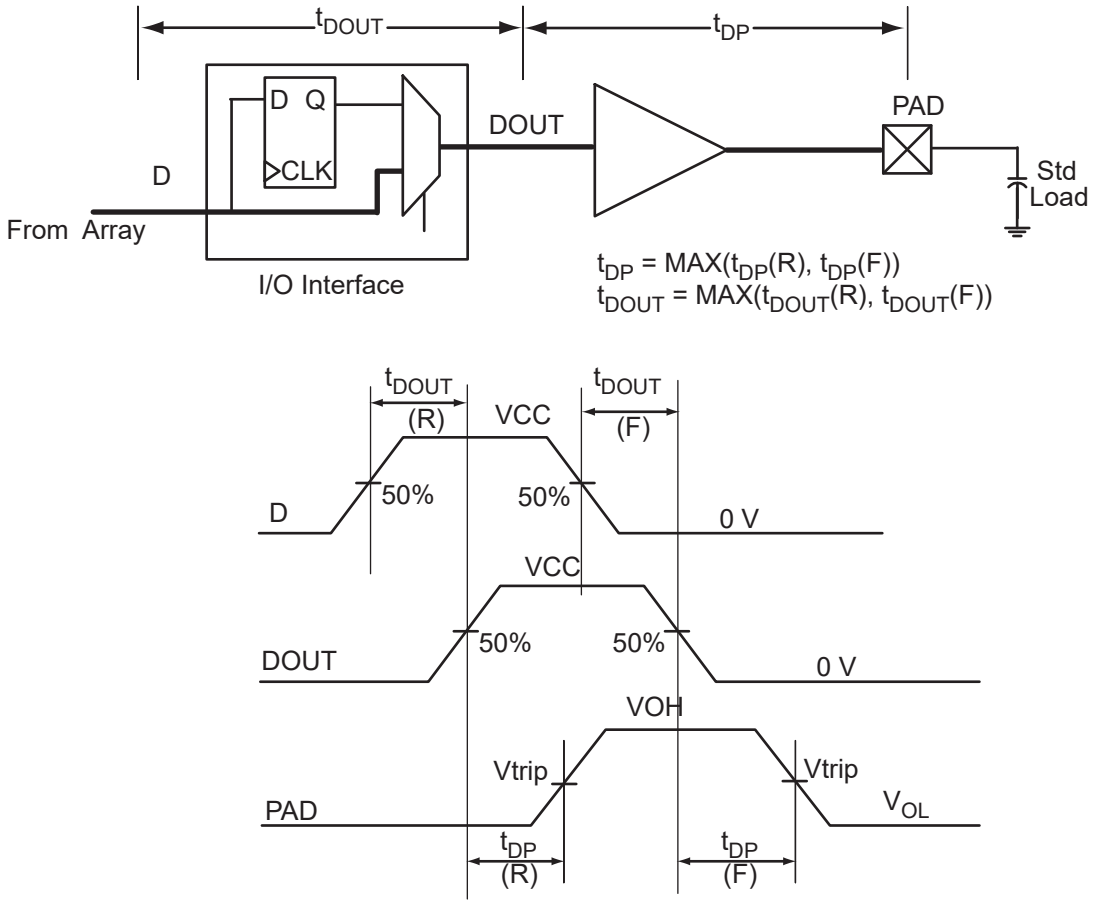

FIGURE 2-6: TRISTATE OUTPUT BUFFER TIMING MODEL AND DELAYS (EXAMPLE)

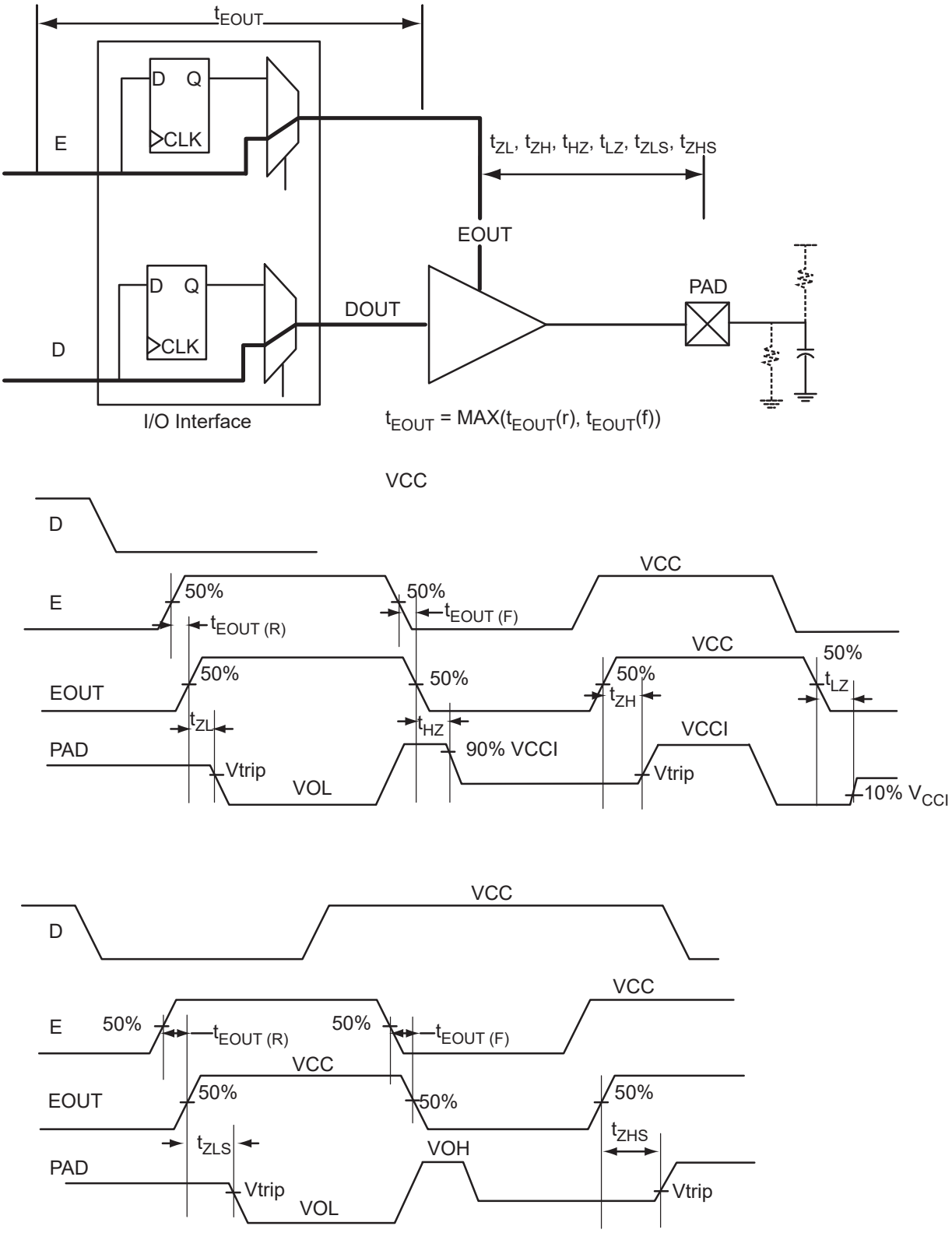

© 2023 Microchip Technology Inc. and its subsidiaries

2.3.2 OVERVIEW OF I/O PERFORMANCE

2.3.2.1 Summary of I/O DC Input and Output Levels – Default I/O Software Settings

TABLE 2-18: APPLICABLE TO COMMERCIAL AND INDUSTRIAL CONDITIONS—SOFTWARE DEFAULT SETTINGS APPLICABLE TO ADVANCED I/O BANKS

I/O Standard	Drive Strength	Equiv. Software Default Drive Strength Option[2]	Slew Rate	VIL		VIH		VOL	VOH	IOL[1] mA	IOH[1] mA
				Min V	Max V	Min V	Max V	Max V	Min V		
3.3V LVTTL / 3.3V LVCMOS	12 mA	12 mA	High	– 0.3	0.8	2	3.6	0.4	2.4	12	12
3.3V LVCMOS Wide Range[3]	100 µA	12 mA	High	– 0.3	0.8	2	3.6	0.2	VCCI – 0.2	0.1	0.1
2.5V LVCMOS	12 mA	12 mA	High	– 0.3	0.7	1.7	2.7	0.7	1.7	12	12
1.8V LVCMOS	12 mA	12 mA	High	– 0.3	0.35 * VCCI	0.65 * VCCI	1.9	0.45	VCCI – 0.45	12	12
1.5V LVCMOS	12 mA	12 mA	High	– 0.3	0.35 * VCCI	0.65 * VCCI	1.6	0.25 * VCCI	0.75 * VCCI	12	12
3.3V PCI	Per PCI specifications										
3.3V PCI-X	Per PCI-X specifications										

Note 1: Currents are measured at 85 °C junction temperature.

2: 3.3V LVCMOS wide range is applicable to 100 µA drive strength only. The configuration will NOT operate at the equivalent software default drive strength. These values are for Normal Ranges ONLY.

3: All LVCMOS 3.3V software macros support LVCMOS 3.3V wide range as specified in the JESD-8B specification.

TABLE 2-19: SUMMARY OF MAXIMUM AND MINIMUM DC INPUT AND OUTPUT LEVELS APPLICABLE TO COMMERCIAL AND INDUSTRIAL CONDITIONS—SOFTWARE DEFAULT SETTINGS APPLICABLE TO STANDARD PLUS I/O BANKS

I/O Standard	Drive Strength	Equiv. Software Default Drive Strength Option[2]	Slew Rate	VIL		VIH		VOL	VOH	IOL[1] mA	IOH[1] mA
				Min V	Max V	Min V	Max V	Max V	Min V		
3.3V LVTTL / 3.3V LVCMOS	12 mA	12 mA	High	– 0.3	0.8	2	3.6	0.4	2.4	12	12
3.3V LVCMOS Wide Range[3]	100 µA	12 mA	High	– 0.3	0.8	2	3.6	0.2	VCCI – 0.2	0.1	0.1
2.5V LVCMOS	12 mA	12 mA	High	– 0.3	0.7	1.7	2.7	0.7	1.7	12	12
1.8V LVCMOS	8 mA	8 mA	High	– 0.3	0.35 * VCCI	0.65 * VCCI	1.9	0.45	VCCI – 0.45	8	8
1.5V LVCMOS	4 mA	4 mA	High	– 0.3	0.35 * VCCI	0.65 * VCCI	1.6	0.25 * VCCI	0.75 * VCCI	4	4
3.3V PCI	Per PCI specifications										
3.3V PCI-X	Per PCI-X specifications										

Note 1: Currents are measured at 85 °C junction temperature.

2: 3.3V LVCMOS wide range is applicable to 100 µA drive strength only. The configuration will NOT operate at the equivalent software default drive strength. These values are for Normal Ranges ONLY.

3: All LVCMOS 3.3V software macros support LVCMOS 3.3V wide range as specified in the JESD8-B specification.

© 2023 Microchip Technology Inc. and its subsidiaries

TABLE 2-20: SUMMARY OF MAXIMUM AND MINIMUM DC INPUT AND OUTPUT LEVELS APPLICABLE TO COMMERCIAL AND INDUSTRIAL CONDITIONS—SOFTWARE DEFAULT SETTINGS APPLICABLE TO STANDARD I/O BANKS

I/O Standard	Drive Strength	Equiv. Software Default Drive Strength Option[2]	Slew Rate	VIL		VIH		VOL	VOH	IOL[1] mA	IOH[1] mA
				Min V	Max V	Min V	Max V	Max V	Min V		
3.3V LVTTL / 3.3V LVCMOS	8 mA	8 mA	High	–0.3	0.8	2	3.6	0.4	2.4	8	8
3.3V LVCMOS Wide Range[3]	100 µA	8 mA	High	–0.3	0.8	2	3.6	0.2	VCCI – 0.2	0.1	0.1
2.5V LVCMOS	8 mA	8 mA	High	–0.3	0.7	1.7	2.7	0.7	1.7	8	8
1.8V LVCMOS	4 mA	4 mA	High	–0.3	0.35 * VCCI	0.65 * VCCI	3.6	0.45	VCCI – 0.45	4	4
1.5V LVCMOS	2 mA	2 mA	High	–0.3	0.35 * VCCI	0.65 * VCCI	3.6	0.25 * VCCI	0.75 * VCCI	2	2

Note 1: Currents are measured at 85 °C junction temperature.

2: 3.3V LVCMOS wide range is applicable to 100 µA drive strength only. The configuration will NOT operate at the equivalent software default drive strength. These values are for Normal Ranges ONLY.

3: All LVCMOS 3.3V software macros support LVCMOS 3.3V wide range as specified in the JESD-8B specification.

TABLE 2-21: SUMMARY OF MAXIMUM AND MINIMUM DC INPUT LEVELS APPLICABLE TO COMMERCIAL AND INDUSTRIAL CONDITIONS

DC I/O Standards	Commercial[1]		Industrial[2]	
	IIL[3]	IIH[4]	IIL[3]	IIH[4]
	µA	µA	µA	µA
3.3V LVTTL / 3.3V LVCMOS	10	10	15	15
3.3V LVCMOS Wide Range	10	10	15	15
2.5V LVCMOS	10	10	15	15
1.8V LVCMOS	10	10	15	15

Note 1: Commercial range (0 °C < T_A < 70 °C)

2: Industrial range (–40 °C < T_A < 85 °C)

3: IIL is the input leakage current per I/O pin over recommended operation conditions where –0.3V < V_{IN} <V_{IL}.

4: IIH is the input leakage current per I/O pin over recommended operating conditions VIH < VIN < VCCI. Input current is larger when operating outside recommended ranges.

TABLE 2-21: SUMMARY OF MAXIMUM AND MINIMUM DC INPUT LEVELS APPLICABLE TO COMMERCIAL AND INDUSTRIAL CONDITIONS

	Commercial[1]		Industrial[2]	
	IIL[3]	IIH[4]	IIL[3]	IIH[4]
DC I/O Standards	**µA**	**µA**	**µA**	**µA**
1.5V LVCMOS	10	10	15	15
3.3V PCI	10	10	15	15
3.3V PCI-X	10	10	15	15

Note 1: Commercial range (0 °C < T_A < 70 °C)

2: Industrial range (–40 °C < T_A < 85 °C)

3: IIL is the input leakage current per I/O pin over recommended operation conditions where –0.3V < V_{IN} <V_{IL}.

4: IIH is the input leakage current per I/O pin over recommended operating conditions VIH < VIN < VCCI. Input current is larger when operating outside recommended ranges.

2.3.2.2 Summary of I/O Timing Characteristics – Default I/O Software Settings

TABLE 2-22: SUMMARY OF AC MEASURING POINTS

Standard	Measuring Trip Point (V_{trip})
3.3V LVTTL / 3.3 V LVCMOS	1.4V
3.3V LVCMOS Wide Range	1.4V
2.5V LVCMOS	1.2V
1.8V LVCMOS	0.90V
1.5V LVCMOS	0.75V
3.3V PCI	0.285 * VCCI (RR)
	0.615 * VCCI (FF)
3.3V PCI-X	0.285 * VCCI (RR)
	0.615 * VCCI (FF)

TABLE 2-23: I/O AC PARAMETER DEFINITIONS

Parameter	Parameter Definition
t_{DP}	Data to Pad delay through the Output Buffer
t_{PY}	Pad to Data delay through the Input Buffer
t_{DOUT}	Data to Output Buffer delay through the I/O interface
t_{EOUT}	Enable to Output Buffer Tristate Control delay through the I/O interface
t_{DIN}	Input Buffer to Data delay through the I/O interface
t_{HZ}	Enable to Pad delay through the Output Buffer—High to Z
t_{ZH}	Enable to Pad delay through the Output Buffer—Z to High
t_{LZ}	Enable to Pad delay through the Output Buffer—Low to Z

© 2023 Microchip Technology Inc. and its subsidiaries

TABLE 2-23: I/O AC PARAMETER DEFINITIONS

Parameter	Parameter Definition
t_{ZL}	Enable to Pad delay through the Output Buffer—Z to Low
t_{ZHS}	Enable to Pad delay through the Output Buffer with delayed enable—Z to High
t_{ZLS}	Enable to Pad delay through the Output Buffer with delayed enable—Z to Low

TABLE 2-24: SUMMARY OF I/O TIMING CHARACTERISTICS—SOFTWARE DEFAULT SETTINGS–2 SPEED GRADE, COMMERCIAL-CASE CONDITIONS: T_J = 70 °C, WORST CASE VCC = 1.425V, WORST-CASE VCCI (PER STANDARD) ADVANCED I/O BANKS

I/O Standard	Drive Strength	Equiv. Software Default Drive Strength Option[1]	Slew Rate	Capacitive Load (pF)	External Resistor (Ω)	t_{DOUT} (ns)	t_{DP} (ns)	t_{DIN} (ns)	t_{PY} (ns)	t_{EOUT} (ns)	t_{ZL} (ns)	t_{ZH} (ns)	t_{LZ} (ns)	t_{HZ} (ns)	t_{ZLS} (ns)	t_{ZHS} (ns)	Units
3.3V LVTTL / 3.3V LVCMOS	12 mA	12 mA	High	35	–	0.45	2.64	0.03	0.76	0.32	2.69	2.11	2.40	2.68	4.36	3.78	ns
3.3V LVCMOS Wide Range[2]	100 µA	12 mA	High	35	–	0.45	4.08	0.03	0.76	0.32	4.08	3.20	3.71	4.14	6.61	5.74	ns
2.5V LVCMOS	12 mA	12 mA	High	35	–	0.45	2.66	0.03	0.98	0.32	2.71	2.56	2.47	2.57	4.38	4.23	ns
1.8V LVCMOS	12 mA	12 mA	High	35	–	0.45	2.64	0.03	0.91	0.32	2.69	2.27	2.76	3.05	4.36	3.94	ns
1.5V LVCMOS	12 mA	12 mA	High	35	–	0.45	3.05	0.03	1.07	0.32	3.10	2.67	2.95	3.14	4.77	4.34	ns
3.3V PCI	Per PCI spec	–	High	10	25[4]	0.45	2.00	0.03	0.65	0.32	2.04	1.46	2.40	2.68	3.71	3.13	ns
3.3V PCI-X	Per PCI-X spec	–	High	10	25[4]	0.45	2.00	0.03	0.62	0.32	2.04	1.46	2.40	2.68	3.71	3.13	ns
LVDS	24 mA	–	High	–	–	0.45	1.37	0.03	1.20	–	–	–	–	–	–	–	ns
LVPECL	24 mA	–	High	–	–	0.45	1.34	0.03	1.05	–	–	–	–	–	–	–	ns

Note 1: The minimum drive strength for any LVCMOS 3.3V software configuration when run in wide range is ±100 µA. Drive strength displayed in the software is supported for normal range only. For a detailed I/V curve, refer to the IBIS models.

2: All LVCMOS 3.3V software macros support LVCMOS 3.3V wide range as specified in the JESD-8B specification.

3: For specific junction temperature and voltage supply levels, refer to Table 2-6 for derating values.

4: Resistance is used to measure I/O propagation delays as defined in PCI specifications. See Figure 2-11 for connectivity. This resistor is not required during normal operation.

TABLE 2-25: SUMMARY OF I/O TIMING CHARACTERISTICS—SOFTWARE DEFAULT SETTINGS – 2 SPEED GRADE, COMMERCIAL-CASE CONDITIONS: T_J = 70 °C, WORST CASE VCC = 1.425V, WORST-CASE VCCI (PER STANDARD) STANDARD PLUS I/O BANKS

I/O Standard	Drive Strength	Equiv. Software Default Drive Strength Option[1]	Slew Rate	Capacitive Load (pF)	External Resistor	t_{DOUT} (ns)	t_{DP} (ns)	t_{DIN} (ns)	t_{PY} (ns)	t_{EOUT} (ns)	t_{ZL} (ns)	t_{ZH} (ns)	t_{LZ} (ns)	t_{HZ} (ns)	t_{ZLS} (ns)	t_{ZHS} (ns)	Units
3.3V LVTTL / 3.3V LVCMOS	12 mA	12 mA	High	35	–	0.45	2.36	0.03	0.75	0.32	2.40	1.93	2.08	2.41	4.07	3.60	ns
3.3V LVCMOS Wide Range[2]	100 µA	12 mA	High	35	–	0.45	3.65	0.03	1.14	0.32	3.65	2.93	3.22	3.72	6.18	5.46	ns
2.5V LVCMOS	12 mA	12 mA	High	35	–	0.45	2.39	0.03	0.97	0.32	2.44	2.35	2.11	2.32	4.11	4.02	ns
1.8V LVCMOS	8 mA	8 mA	High	35	–	0.45	3.03	0.03	0.90	0.32	2.87	3.03	2.19	2.32	4.54	4.70	ns
1.5V LVCMOS	4 mA	4 mA	High	35	–	0.45	3.61	0.03	1.06	0.32	3.35	3.61	2.26	2.34	5.02	5.28	ns
3.3V PCI	Per PCI spec	–	High	10	25[4]	0.45	1.72	0.03	0.64	0.32	1.76	1.27	2.08	2.41	3.42	2.94	ns
3.3V PCI-X	Per PCI-X spec	–	High	10	25[4]	0.45	1.72	0.03	0.62	0.32	1.76	1.27	2.08	2.41	3.42	2.94	ns

Note 1: The minimum drive strength for any LVCMOS 3.3V software configuration when run in wide range is ±100 µA. Drive strength displayed in the software is supported for normal range only. For a detailed I/V curve, refer to the IBIS models.

2: All LVCMOS 3.3V software macros support LVCMOS 3.3V wide range as specified in the JESD8-B specification.

3: For specific junction temperature and voltage supply levels, refer to Table 2-6 for derating values.

4: Resistance is used to measure I/O propagation delays as defined in PCI specifications. See Figure 2-11 for connectivity. This resistor is not required during normal operation.

© 2023 Microchip Technology Inc. and its subsidiaries

TABLE 2-26: SUMMARY OF I/O TIMING CHARACTERISTICS—SOFTWARE DEFAULT SETTINGS–2 SPEED GRADE, COMMERCIAL-CASE CONDITIONS: T_J = 70 °C, WORST CASE VCC = 1.425V, WORST-CASE VCCI (PER STANDARD) STANDARD I/O BANKS

I/O Standard	Drive Strength	Equiv. Software Default Drive Strength Option[1]	Slew Rate	Capacitive Load (pF)	External Resistor	t_{DOUT} (ns)	t_{DP} (ns)	t_{DIN} (ns)	t_{PY} (ns)	t_{EOUT} (ns)	t_{ZL} (ns)	t_{ZH} (ns)	t_{LZ} (ns)	t_{HZ} (ns)	Units
3.3V LVTTL / 3.3V LVCMOS	8 mA	8 mA	High	35	–	0.45	3.29	0.03	0.75	0.32	3.36	2.80	1.79	2.01	ns
3.3V LVCMOS Wide Range[2]	100 µA	8 mA	High	35	–	0.45	5.09	0.03	1.13	0.32	5.09	4.25	2.77	3.11	ns
2.5V LVCMOS	8 mA	8 mA	High	35	–	0.45	3.56	0.03	0.96	0.32	3.40	3.56	1.78	1.91	ns
1.8V LVCMOS	4 mA	4 mA	High	35	–	0.45	4.74	0.03	0.90	0.32	4.02	4.74	1.80	1.85	ns
1.5V LVCMOS	2 mA	2 mA	High	35	–	0.45	5.71	0.03	1.06	0.32	4.71	5.71	1.83	1.83	ns

Note 1: The minimum drive strength for any LVCMOS 3.3V software configuration when run in wide range is ±100 µA. Drive strength displayed in the software is supported for normal range only. For a detailed I/V curve, refer to the IBIS models.

2: All LVCMOS 3.3V software macros support LVCMOS 3.3V wide range as specified in the JESD-8B specification.

3: For specific junction temperature and voltage supply levels, refer to Table 2-6 for derating values.

2.3.3 I/O DC CHARACTERISTICS

TABLE 2-27: INPUT CAPACITANCE

Symbol	Definition	Conditions	Min	Max	Units
C_{IN}	Input capacitance	VIN = 0, f = 1.0 MHz	–	8	pF
C_{INCLK}	Input capacitance on the clock pin	VIN = 0, f = 1.0 MHz	–	8	pF

TABLE 2-28: I/O OUTPUT BUFFER MAXIMUM RESISTANCES[1] APPLICABLE TO ADVANCED I/O BANKS

Standard	Drive Strength	$R_{PULL\text{-}DOWN}$ (Ω)[2]	$R_{PULL\text{-}UP}$ (Ω)[3]
3.3V LVTTL/3.3V LVCMOS	2 mA	100	300
	4 mA	100	300
	6 mA	50	150
	8 mA	50	150
	12 mA	25	75
	16 mA	17	50
	24 mA	11	33
3.3V LVCMOS Wide Range[4]	100 µA	Same as regular 3.3V LVCMOS	Same as regular 3.3V LVCMOS
2.5V LVCMOS	2 mA	100	200
	4 mA	100	200
	6 mA	50	100
	8 mA	50	100
	12 mA	25	50
	16 mA	20	40
	24 mA	11	22
1.8V LVCMOS	2 mA	200	225
	4 mA	100	112
	6 mA	50	56
	8 mA	50	56
	12 mA	20	22
	16 mA	20	22

Note 1: These maximum values are provided for informational reasons only. Minimum output buffer resistance values depend on VCCI, drive strength selection, temperature, and process. For board design considerations and detailed output buffer resistances, use the corresponding IBIS models located at https://www.microchip.com/en-us/products/fpgas-and-plds/fpgas/proasic-3-fpgas#ibis.

2: $R_{(PULL\text{-}DOWN\text{-}MAX)}$ = (VOLspec) / IOLspec

3: $R_{(PULL\text{-}UP\text{-}MAX)}$ = (VCCImax – VOHspec) / IOHspec

4: All LVCMOS 3.3V software macros support LVCMOS 3.3V wide range as specified in the JESD-8B specification.

© 2023 Microchip Technology Inc. and its subsidiaries

TABLE 2-28: I/O OUTPUT BUFFER MAXIMUM RESISTANCES[1] APPLICABLE TO ADVANCED I/O BANKS

Standard	Drive Strength	$R_{PULL-DOWN}$ (Ω)[2]	$R_{PULL-UP}$ (Ω)[3]
1.5V LVCMOS	2 mA	200	224
	4 mA	100	112
	6 mA	67	75
	8 mA	33	37
	12 mA	33	37
3.3V PCI/PCI-X	Per PCI/PCI-X specification	25	75

Note 1: These maximum values are provided for informational reasons only. Minimum output buffer resistance values depend on VCCI, drive strength selection, temperature, and process. For board design considerations and detailed output buffer resistances, use the corresponding IBIS models located at https://www.microchip.com/en-us/products/fpgas-and-plds/fpgas/proasic-3-fpgas#ibis.

2: $R_{(PULL-DOWN-MAX)}$ = (VOLspec) / IOLspec

3: $R_{(PULL-UP-MAX)}$ = (VCCImax – VOHspec) / IOHspec

4: All LVCMOS 3.3V software macros support LVCMOS 3.3V wide range as specified in the JESD-8B specification.

TABLE 2-29: I/O OUTPUT BUFFER MAXIMUM RESISTANCES [1] APPLICABLE TO STANDARD PLUS I/O BANKS

Standard	Drive Strength	$R_{PULL-DOWN}$ (Ω)[2]	$R_{PULL-UP}$ (Ω)[3]
3.3V LVTTL /3.3V LVCMOS	2 mA	100	300
	4 mA	100	300
	6 mA	50	150
	8 mA	50	150
	12 mA	25	75
	16 mA	25	75
3.3V LVCMOS Wide Range[4]	100 µA	Same as regular 3.3V LVCMOS	Same as regular 3.3V LVCMOS
2.5V LVCMOS	2 mA	100	200
	4 mA	100	200
	6 mA	50	100
	8 mA	50	100
	12 mA	25	50

Note 1: These maximum values are provided for informational reasons only. Minimum output buffer resistance values depend on VCCI, drive strength selection, temperature, and process. For board design considerations and detailed output buffer resistances, use the corresponding IBIS models located at https://www.microchip.com/en-us/products/fpgas-and-plds/fpgas/proasic-3-fpgas#ibis.

2: $R_{(PULL-DOWN-MAX)}$ = (VOLspec) / IOLspec

3: $R_{(PULL-UP-MAX)}$ = (VCCImax – VOHspec) / IOHspec

4: All LVCMOS 3.3V software macros support LVCMOS 3.3V wide range as specified in the JESD-8B specification.

TABLE 2-29: I/O OUTPUT BUFFER MAXIMUM RESISTANCES [1] APPLICABLE TO STANDARD PLUS I/O BANKS

Standard	Drive Strength	$R_{PULL\text{-}DOWN}$ (Ω)[2]	$R_{PULL\text{-}UP}$ (Ω)[3]
1.8V LVCMOS	2 mA	200	225
	4 mA	100	112
	6 mA	50	56
	8 mA	50	56
1.5V LVCMOS	2 mA	200	224
	4 mA	100	112
3.3V PCI/PCI-X	Per PCI/PCI-X specification	25	75

Note 1: These maximum values are provided for informational reasons only. Minimum output buffer resistance values depend on VCCI, drive strength selection, temperature, and process. For board design considerations and detailed output buffer resistances, use the corresponding IBIS models located at https://www.microchip.com/en-us/products/fpgas-and-plds/fpgas/proasic-3-fpgas#ibis.

2: $R_{(PULL\text{-}DOWN\text{-}MAX)}$ = (VOLspec) / IOLspec

3: $R_{(PULL\text{-}UP\text{-}MAX)}$ = (VCCImax – VOHspec) / IOHspec

4: All LVCMOS 3.3V software macros support LVCMOS 3.3V wide range as specified in the JESD-8B specification.

TABLE 2-30: I/O OUTPUT BUFFER MAXIMUM RESISTANCES[1] APPLICABLE TO STANDARD I/O BANKS

Standard	Drive Strength	$R_{PULL\text{-}DOWN}$ (Ω)[2]	$R_{PULL\text{-}UP}$ (Ω)[3]
3.3V LVTTL/3.3 V LVCMOS	2 mA	100	300
	4 mA	100	300
	6 mA	50	150
	8 mA	50	150
3.3V LVCMOS Wide Range[4]	100 µA	Same as regular 3.3V LVCMOS	Same as regular 3.3V LVCMOS
2.5V LVCMOS	2 mA	100	200
	4 mA	100	200
	6 mA	50	100
	8 mA	50	100

Note 1: These maximum values are provided for informational reasons only. Minimum output buffer resistance values depend on VCCI, drive strength selection, temperature, and process. For board design considerations and detailed output buffer resistances, use the corresponding IBIS models located at https://www.microchip.com/en-us/products/fpgas-and-plds/fpgas/proasic-3-fpgas#ibis.

2: $R_{(PULL\text{-}DOWN\text{-}MAX)}$ = (VOLspec) / IOLspec

3: $R_{(PULL\text{-}UP\text{-}MAX)}$ = (VCCImax – VOHspec) / IOHspec

4: All LVCMOS 3.3V software macros support LVCMOS 3.3V wide range as specified in the JESD-8B specification.

© 2023 Microchip Technology Inc. and its subsidiaries

TABLE 2-30: I/O OUTPUT BUFFER MAXIMUM RESISTANCES[1] APPLICABLE TO STANDARD I/O BANKS

Standard	Drive Strength	$R_{PULL-DOWN}$ (Ω)[2]	$R_{PULL-UP}$ (Ω)[3]
1.8V LVCMOS	2 mA	200	225
	4 mA	100	112
1.5V LVCMOS	2 mA	200	224

Note 1: These maximum values are provided for informational reasons only. Minimum output buffer resistance values depend on VCCI, drive strength selection, temperature, and process. For board design considerations and detailed output buffer resistances, use the corresponding IBIS models located at https://www.microchip.com/en-us/products/fpgas-and-plds/fpgas/proasic-3-fpgas#ibis.

2: $R_{(PULL-DOWN-MAX)}$ = (VOLspec) / IOLspec

3: $R_{(PULL-UP-MAX)}$ = (VCCImax – VOHspec) / IOHspec

4: All LVCMOS 3.3V software macros support LVCMOS 3.3V wide range as specified in the JESD-8B specification.

TABLE 2-31: I/O WEAK PULL-UP/PULL-DOWN RESISTANCES MINIMUM AND MAXIMUM WEAK PULL-UP/PULL-DOWN RESISTANCE VALUES

VCCI	$R_{(WEAK\ PULL-UP)}$[1] (Ω)		$R_{(WEAK\ PULL-DOWN)}$[2] (Ω)	
	Min	Max	Min	Max
3.3V	10k	45k	10k	45k
3.3V (wide range I/Os)	10k	45k	10k	45k
2.5V	11k	55k	12k	74k
1.8V	18k	70k	17k	110k
1.5V	19k	90k	19k	140k

Note 1: $R_{(WEAK\ PULL-UP-MAX)} = (VCCI_{MAX} - VOH_{spec}) / I_{(WEAK\ PULL-UP-MIN)}$

2: $R_{(WEAK\ PULL-DOWN-MAX)} = (VOL_{spec}) / I_{(WEAK\ PULL-DOWN-MIN)}$

TABLE 2-32: I/O SHORT CURRENTS IOSH/IOSL APPLICABLE TO ADVANCED I/O BANKS

	Drive Strength	IOSL (mA)[1]	IOSH (mA)[1]
3.3V LVTTL/3.3V LVCMOS	2 mA	27	25
	4 mA	27	25
	6 mA	54	51
	8 mA	54	51
	12 mA	109	103
	16 mA	127	132
	24 mA	181	268
3.3V LVCMOS Wide Range[2]	100 µA	Same as regular 3.3V LVCMOS	Same as regular 3.3V LVCMOS

TABLE 2-32: I/O SHORT CURRENTS IOSH/IOSL APPLICABLE TO ADVANCED I/O BANKS

	Drive Strength	IOSL (mA)[1]	IOSH (mA)[1]
2.5V LVCMOS	2 mA	18	16
	4 mA	18	16
	6 mA	37	32
	8 mA	37	32
	12 mA	74	65
	16 mA	87	83
	24 mA	124	169
1.8V LVCMOS	2 mA	11	9
	4 mA	22	17
	6 mA	44	35
	8 mA	51	45
	12 mA	74	91
	16 mA	74	91
1.5V LVCMOS	2 mA	16	13
	4 mA	33	25
	6 mA	39	32
	8 mA	55	66
	12 mA	55	66
3.3V PCI/PCI-X	Per PCI/PCI-X specification	109	103

Note 1: T_J = 100 °C

2: Applicable to 3.3V LVCMOS Wide Range. I_{OSL}/I_{OSH} dependent on the I/O buffer drive strength selected for wide range applications. All LVCMOS 3.3V software macros support LVCMOS 3.3V wide range as specified in the JESD8-B specification.

TABLE 2-33: I/O SHORT CURRENTS IOSH/IOSL APPLICABLE TO STANDARD PLUS I/O BANKS

	Drive Strength	IOSL (mA)[1]	IOSH (mA)[1]
3.3V LVTTL / 3.3V LVCMOS	2 mA	27	25
	4 mA	27	25
	6 mA	54	51
	8 mA	54	51
	12 mA	109	103
	16 mA	109	103
3.3V LVCMOS Wide Range[2]	100 µA	Same as regular 3.3V LVCMOS	Same as regular 3.3V LVCMOS

© 2023 Microchip Technology Inc. and its subsidiaries

TABLE 2-33: I/O SHORT CURRENTS IOSH/IOSL APPLICABLE TO STANDARD PLUS I/O BANKS

	Drive Strength	IOSL (mA)[1]	IOSH (mA)[1]
2.5V LVCMOS	2 mA	18	16
	4 mA	18	16
	6 mA	37	32
	8 mA	37	32
	12 mA	74	65
1.8V LVCMOS	2 mA	11	9
	4 mA	22	17
	6 mA	44	35
	8 mA	44	35
1.5V LVCMOS	2 mA	16	13
	4 mA	33	25
3.3V PCI/PCI-X	Per PCI/PCI-X specification	109	103

Note 1: T_J = 100 °C

2: Applicable to 3.3V LVCMOS Wide Range. IOSL/IOSH dependent on the I/O buffer drive strength selected for wide range applications. All LVCMOS 3.3V software macros support LVCMOS 3.3V wide range as specified in the JESD8-B specification.

TABLE 2-34: I/O SHORT CURRENTS IOSH/IOSL APPLICABLE TO STANDARD I/O BANKS

	Drive Strength	IOSL (mA)[1]	IOSH (mA)[1]
3.3V LVTTL / 3.3V LVCMOS	2 mA	27	25
	4 mA	27	25
	6 mA	54	51
	8 mA	54	51
3.3V LVCMOS Wide Range[2]	100 µA	Same as regular 3.3V LVCMOS	Same as regular 3.3V LVCMOS
2.5V LVCMOS	2 mA	18	16
	4 mA	18	16
	6 mA	37	32
	8 mA	37	32
1.8V LVCMOS	2 mA	11	9
	4 mA	22	17
1.5V LVCMOS	2 mA	16	13

Note 1: T_J = 100 °C

2: Applicable to 3.3V LVCMOS Wide Range. I_{OSL}/I_{OSH} dependent on the I/O buffer drive strength selected for wide range applications. All LVCMOS 3.3 V software macros support LVCMOS 3.3V wide range as specified in the JESD-8B specification.

The length of time an I/O can withstand IOSH/IOSL events depends on the junction temperature. The reliability data below is based on a 3.3V, 12 mA I/O setting, which is the worst case for this type of analysis.

For example, at 100 °C, the short current condition would have to be sustained for more than six months to cause a reliability concern. The I/O design does not contain any short circuit protection, but such protection would only be needed in extremely prolonged stress conditions.

TABLE 2-35: DURATION OF SHORT CIRCUIT EVENT BEFORE FAILURE

Temperature	Time before Failure
–40 °C	> 20 years
0 °C	> 20 years
25 °C	> 20 years
70 °C	5 years
85 °C	2 years
100 °C	0.5 years

TABLE 2-36: I/O INPUT RISE TIME, FALL TIME, AND RELATED I/O RELIABILITY

Input Buffer	Input Rise/Fall Time (min)	Input Rise/Fall Time (max)	Reliability
LVTTL/LVCMOS	No requirement	10 ns *	20 years (110 °C)
LVDS/B-LVDS/ M-LVDS/LVPECL	No requirement	10 ns *	10 years (100 °C)

Note: *The maximum input rise/fall time is related to the noise induced into the input buffer trace. If the noise is low, then the rise time and fall time of input buffers can be increased beyond the maximum value. The longer the rise/fall times, the more susceptible the input signal is to the board noise. Microchip recommends signal integrity evaluation/characterization of the system to ensure that there is no excessive noise coupling into input signals.

2.3.4 SINGLE-ENDED I/O CHARACTERISTICS

2.3.4.1 3.3V LVTTL/3.3V LVCMOS

Low-Voltage Transistor–Transistor Logic (LVTTL) is a general-purpose standard (EIA/JESD) for 3.3V applications. It uses an LVTTL input buffer and push-pull output buffer.

TABLE 2-37: MINIMUM AND MAXIMUM DC INPUT AND OUTPUT LEVELS APPLICABLE TO ADVANCED I/O BANKS

3.3V LVTTL / 3.3V LVCMOS	VIL		VIH		VOL	VOH	IOL	IOH	IOSL	IOSH	IIL[1]	IIH[2]
Drive Strength	Min V	Max V	Min V	Max V	Max V	Min V	mA	mA	Max mA[3]	Max mA[3]	µA[4]	µA[4]
2 mA	–0.3	0.8	2	3.6	0.4	2.4	2	2	27	25	10	10
4 mA	–0.3	0.8	2	3.6	0.4	2.4	4	4	27	25	10	10
6 mA	–0.3	0.8	2	3.6	0.4	2.4	6	6	54	51	10	10
8 mA	–0.3	0.8	2	3.6	0.4	2.4	8	8	54	51	10	10
12 mA	–0.3	0.8	2	3.6	0.4	2.4	12	12	109	103	10	10
16 mA	–0.3	0.8	2	3.6	0.4	2.4	16	16	127	132	10	10

© 2023 Microchip Technology Inc. and its subsidiaries

TABLE 2-37: MINIMUM AND MAXIMUM DC INPUT AND OUTPUT LEVELS APPLICABLE TO ADVANCED I/O BANKS

3.3V LVTTL / 3.3V LVCMOS	VIL		VIH		VOL	VOH	IOL	IOH	IOSL	IOSH	IIL[1]	IIH[2]
Drive Strength	Min V	Max V	Min V	Max V	Max V	Min V	mA	mA	Max mA[3]	Max mA[3]	µA[4]	µA[4]
24 mA	–0.3	0.8	2	3.6	0.4	2.4	24	24	181	268	10	10

Note 1: IIL is the input leakage current per I/O pin over recommended operation conditions where –0.3 V < VIN < VIL.

2: IIH is the input leakage current per I/O pin over recommended operating conditions VIH < VIN < VCCI. Input current is larger when operating outside recommended ranges

3: Currents are measured at 100 °C junction temperature and maximum voltage.

4: Currents are measured at 85 °C junction temperature.

5: Software default selection highlighted in gray.

TABLE 2-38: MINIMUM AND MAXIMUM DC INPUT AND OUTPUT LEVELS APPLICABLE TO STANDARD PLUS I/O BANKS

3.3V LVTTL / 3.3V LVCMOS	VIL		VIH		VOL	VOH	IOL	IOH	IOSL	IOSH	IIL[1]	IIH[2]
Drive Strength	Min V	Max V	Min V	Max V	Max V	Min V	mA	mA	Max mA[3]	Max mA[3]	µA[4]	µA[4]
2 mA	–0.3	0.8	2	3.6	0.4	2.4	2	2	27	25	10	10
4 mA	–0.3	0.8	2	3.6	0.4	2.4	4	4	27	25	10	10
6 mA	–0.3	0.8	2	3.6	0.4	2.4	6	6	54	51	10	10
8 mA	–0.3	0.8	2	3.6	0.4	2.4	8	8	54	51	10	10
12 mA	–0.3	0.8	2	3.6	0.4	2.4	12	12	109	103	10	10
16 mA	–0.3	0.8	2	3.6	0.4	2.4	16	16	109	103	10	10

Note 1: IIL is the input leakage current per I/O pin over recommended operation conditions where –0.3V < VIN < VIL.

2: IIH is the input leakage current per I/O pin over recommended operating conditions VIH < VIN < VCCI. Input current is larger when operating outside recommended ranges

3: Currents are measured at 100 °C junction temperature and maximum voltage.

4: Currents are measured at 85 °C junction temperature.

5: Software default selection highlighted in gray.

TABLE 2-39: MINIMUM AND MAXIMUM DC INPUT AND OUTPUT LEVELS APPLICABLE TO STANDARD I/O BANKS

3.3V LVTTL / 3.3V LVCMOS	VIL		VIH		VOL	VOH	IOL	IOH	IOSL	IOSH	IIL[1]	IIH[2]
Drive Strength	Min V	Max V	Min V	Max V	Max V	Min V	mA	mA	Max mA[3]	Max mA[3]	µA[4]	µA[4]
2 mA	–0.3	0.8	2	3.6	0.4	2.4	2	2	25	27	10	10
4 mA	–0.3	0.8	2	3.6	0.4	2.4	4	4	25	27	10	10
6 mA	–0.3	0.8	2	3.6	0.4	2.4	6	6	51	54	10	10

TABLE 2-39: MINIMUM AND MAXIMUM DC INPUT AND OUTPUT LEVELS APPLICABLE TO STANDARD I/O BANKS

3.3V LVTTL / 3.3V LVCMOS	VIL		VIH		VOL	VOH	IOL	IOH	IOSL	IOSH	IIL[1]	IIH[2]
Drive Strength	Min V	Max V	Min V	Max V	Max V	Min V	mA	mA	Max mA[3]	Max mA[3]	µA[4]	µA[4]
8 mA	–0.3	0.8	2	3.6	0.4	2.4	8	8	51	54	10	10

Note 1: IIL is the input leakage current per I/O pin over recommended operation conditions where –0.3V < VIN < VIL.

2: I_{IH} is the input leakage current per I/O pin over recommended operating conditions VIH < VIN < VCCI. Input current is larger when operating outside recommended ranges

3: Currents are measured at 100 °C junction temperature and maximum voltage.

4: Currents are measured at 85 °C junction temperature.

5: Software default selection highlighted in gray.

TABLE 2-40: AC WAVEFORMS, MEASURING POINTS, AND CAPACITIVE LOADS

Input Low (V)	Input High (V)	Measuring Point* (V)	C_{LOAD} (pF)
0	3.3	1.4	35

Note: *Measuring point = Vtrip. See Table 2-22 for a complete table of trip points.

FIGURE 2-7: AC LOADING

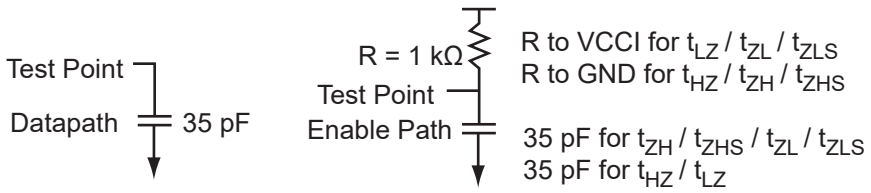

© 2023 Microchip Technology Inc. and its subsidiaries

2.3.4.1.1 Timing Characteristics

TABLE 2-41: 3.3V LVTTL/3.3V LVCMOS HIGH SLEW COMMERCIAL-CASE CONDITIONS: T_J = 70 °C, WORST-CASE VCC = 1.425V, WORST-CASE VCCI = 3.0V APPLICABLE TO ADVANCED I/O BANKS

Drive Strength	Speed Grade	t_{DOUT}	t_{DP}	t_{DIN}	t_{PY}	t_{EOUT}	t_{ZL}	t_{ZH}	t_{LZ}	t_{HZ}	t_{ZLS}	t_{ZHS}	Units
2 mA	Std.	0.66	7.66	0.04	1.02	0.43	7.80	6.59	2.65	2.61	10.03	8.82	ns
	–1	0.56	6.51	0.04	0.86	0.36	6.63	5.60	2.25	2.22	8.54	7.51	ns
	–2	0.49	5.72	0.03	0.76	0.32	5.82	4.92	1.98	1.95	7.49	6.59	ns
4 mA	Std.	0.66	7.66	0.04	1.02	0.43	7.80	6.59	2.65	2.61	10.03	8.82	ns
	–1	0.56	6.51	0.04	0.86	0.36	6.63	5.60	2.25	2.22	8.54	7.51	ns
	–2	0.49	5.72	0.03	0.76	0.32	5.82	4.92	1.98	1.95	7.49	6.59	ns
6 mA	Std.	0.66	4.91	0.04	1.02	0.43	5.00	4.07	2.99	3.20	7.23	6.31	ns
	–1	0.56	4.17	0.04	0.86	0.36	4.25	3.46	2.54	2.73	6.15	5.36	ns
	–2	0.49	3.66	0.03	0.76	0.32	3.73	3.04	2.23	2.39	5.40	4.71	ns
8 mA	Std.	0.66	4.91	0.04	1.02	0.43	5.00	4.07	2.99	3.20	7.23	6.31	ns
	–1	0.56	4.17	0.04	0.86	0.36	4.25	3.46	2.54	2.73	6.15	5.36	ns
	–2	0.49	3.66	0.03	0.76	0.32	3.73	3.04	2.23	2.39	5.40	4.71	ns
12 mA	Std.	0.66	3.53	0.04	1.02	0.43	3.60	2.82	3.21	3.58	5.83	5.06	ns
	–1	0.56	3.00	0.04	0.86	0.36	3.06	2.40	2.73	3.05	4.96	4.30	ns
	–2	0.49	2.64	0.03	0.76	0.32	2.69	2.11	2.40	2.68	4.36	3.78	ns
16 mA	Std.	0.66	3.33	0.04	1.02	0.43	3.39	2.56	3.26	3.68	5.63	4.80	ns
	–1	0.56	2.83	0.04	0.86	0.36	2.89	2.18	2.77	3.13	4.79	4.08	ns
	–2	0.49	2.49	0.03	0.76	0.32	2.53	1.91	2.44	2.75	4.20	3.58	ns
24 mA	Std.	0.66	3.08	0.04	1.02	0.43	3.13	2.12	3.32	4.06	5.37	4.35	ns
	–1	0.56	2.62	0.04	0.86	0.36	2.66	1.80	2.83	3.45	4.57	3.70	ns
	–2	0.49	2.30	0.03	0.76	0.32	2.34	1.58	2.48	3.03	4.01	3.25	ns

Note 1: Software default selection highlighted in gray.

2: For specific junction temperature and voltage supply levels, refer to Table 2-6 for derating values.

TABLE 2-42: 3.3V LVTTL/3.3 V LVCMOS LOW SLEW COMMERCIAL-CASE CONDITIONS: T_J = 70 °C, WORST-CASE VCC = 1.425V, WORST-CASE VCCI = 3.0V APPLICABLE TO ADVANCED I/O BANKS

Drive Strength	Speed Grade	t_{DOUT}	t_{DP}	t_{DIN}	t_{PY}	t_{EOUT}	t_{ZL}	t_{ZH}	t_{LZ}	t_{HZ}	t_{ZLS}	t_{ZHS}	Units
2 mA	Std.	0.66	10.26	0.04	1.02	0.43	10.45	8.90	2.64	2.46	12.68	11.13	ns
	–1	0.56	8.72	0.04	0.86	0.36	8.89	7.57	2.25	2.09	10.79	9.47	ns
	–2	0.49	7.66	0.03	0.76	0.32	7.80	6.64	1.98	1.83	9.47	8.31	ns
4 mA	Std.	0.66	10.26	0.04	1.02	0.43	10.45	8.90	2.64	2.46	12.68	11.13	ns

Note: For specific junction temperature and voltage supply levels, refer to Table 2-6 for derating values.

TABLE 2-42: 3.3V LVTTL/3.3 V LVCMOS LOW SLEW COMMERCIAL-CASE CONDITIONS: T_J = 70 °C, WORST-CASE VCC = 1.425V, WORST-CASE VCCI = 3.0V APPLICABLE TO ADVANCED I/O BANKS

Drive Strength	Speed Grade	t_{DOUT}	t_{DP}	t_{DIN}	t_{PY}	t_{EOUT}	t_{ZL}	t_{ZH}	t_{LZ}	t_{HZ}	t_{ZLS}	t_{ZHS}	Units
	–1	0.56	8.72	0.04	0.86	0.36	8.89	7.57	2.25	2.09	10.79	9.47	ns
	–2	0.49	7.66	0.03	0.76	0.32	7.80	6.64	1.98	1.83	9.47	8.31	ns
6 mA	Std.	0.66	7.27	0.04	1.02	0.43	7.41	6.28	2.98	3.04	9.65	8.52	ns
	–1	0.56	6.19	0.04	0.86	0.36	6.30	5.35	2.54	2.59	8.20	7.25	ns
	–2	0.49	5.43	0.03	0.76	0.32	5.53	4.69	2.23	2.27	7.20	6.36	ns
8 mA	Std.	0.66	7.27	0.04	1.02	0.43	7.41	6.28	2.98	3.04	9.65	8.52	ns
	–1	0.56	6.19	0.04	0.86	0.36	6.30	5.35	2.54	2.59	8.20	7.25	ns
	–2	0.49	5.43	0.03	0.76	0.32	5.53	4.69	2.23	2.27	7.20	6.36	ns
12 mA	Std.	0.66	5.58	0.04	1.02	0.43	5.68	4.87	3.21	3.42	7.92	7.11	ns
	–1	0.56	4.75	0.04	0.86	0.36	4.84	4.14	2.73	2.91	6.74	6.05	ns
	–2	0.49	4.17	0.03	0.76	0.32	4.24	3.64	2.39	2.55	5.91	5.31	ns
16 mA	Std.	0.66	5.21	0.04	1.02	0.43	5.30	4.56	3.26	3.51	7.54	6.80	ns
	–1	0.56	4.43	0.04	0.86	0.36	4.51	3.88	2.77	2.99	6.41	5.79	ns
	–2	0.49	3.89	0.03	0.76	0.32	3.96	3.41	2.43	2.62	5.63	5.08	ns
24 mA	Std.	0.66	4.85	0.04	1.02	0.43	4.94	4.54	3.32	3.88	7.18	6.78	ns
	–1	0.56	4.13	0.04	0.86	0.36	4.20	3.87	2.82	3.30	6.10	5.77	ns
	–2	0.49	3.62	0.03	0.76	0.32	3.69	3.39	2.48	2.90	5.36	5.06	ns

Note: For specific junction temperature and voltage supply levels, refer to Table 2-6 for derating values.

TABLE 2-43: 3.3V LVTTL/3.3V LVCMOS HIGH SLEW COMMERCIAL-CASE CONDITIONS: T_J = 70 °C, WORST-CASE VCC = 1.425V, WORST-CASE VCCI = 3.0V APPLICABLE TO STANDARD PLUS I/O BANKS

Drive Strength	Speed Grade	t_{DOUT}	t_{DP}	t_{DIN}	t_{PY}	t_{EOUT}	t_{ZL}	t_{ZH}	t_{LZ}	t_{HZ}	t_{ZLS}	t_{ZHS}	Units
2 mA	Std.	0.66	7.20	0.04	1.00	0.43	7.34	6.29	2.27	2.34	9.57	8.52	ns
	–1	0.56	6.13	0.04	0.85	0.36	6.24	5.35	1.93	1.99	8.14	7.25	ns
	–2	0.49	5.38	0.03	0.75	0.32	5.48	4.69	1.70	1.75	7.15	6.36	ns
4 mA	Std.	0.66	7.20	0.04	1.00	0.43	7.34	6.29	2.27	2.34	9.57	8.52	ns
	–1	0.56	6.13	0.04	0.85	0.36	6.24	5.35	1.93	1.99	8.14	7.25	ns
	–2	0.49	5.38	0.03	0.75	0.32	5.48	4.69	1.70	1.75	7.15	6.36	ns
6 mA	Std.	0.66	4.50	0.04	1.00	0.43	4.58	3.82	2.58	2.88	6.82	6.05	ns
	–1	0.56	3.83	0.04	0.85	0.36	3.90	3.25	2.19	2.45	5.80	5.15	ns
	–2	0.49	3.36	0.03	0.75	0.32	3.42	2.85	1.92	2.15	5.09	4.52	ns
8 mA	Std.	0.66	4.50	0.04	1.00	0.43	4.58	3.82	2.58	2.88	6.82	6.05	ns
	–1	0.56	3.83	0.04	0.85	0.36	3.90	3.25	2.19	2.45	5.80	5.15	ns
	–2	0.49	3.36	0.03	0.75	0.32	3.42	2.85	1.92	2.15	5.09	4.52	ns

© 2023 Microchip Technology Inc. and its subsidiaries

TABLE 2-43: 3.3V LVTTL/3.3V LVCMOS HIGH SLEW COMMERCIAL-CASE CONDITIONS: T_J = 70 °C, WORST-CASE VCC = 1.425V, WORST-CASE VCCI = 3.0V APPLICABLE TO STANDARD PLUS I/O BANKS

Drive Strength	Speed Grade	t_{DOUT}	t_{DP}	t_{DIN}	t_{PY}	t_{EOUT}	t_{ZL}	t_{ZH}	t_{LZ}	t_{HZ}	t_{ZLS}	t_{ZHS}	Units
12 mA	Std.	0.66	3.16	0.04	1.00	0.43	3.22	2.58	2.79	3.22	5.45	4.82	ns
	–1	0.56	2.69	0.04	0.85	0.36	2.74	2.20	2.37	2.74	4.64	4.10	ns
	–2	0.49	2.36	0.03	0.75	0.32	2.40	1.93	2.08	2.41	4.07	3.60	ns
16 mA	Std.	0.66	3.16	0.04	1.00	0.43	3.22	2.58	2.79	3.22	5.45	4.82	ns
	–1	0.56	2.69	0.04	0.85	0.36	2.74	2.20	2.37	2.74	4.64	4.10	ns
	–2	0.49	2.36	0.03	0.75	0.32	2.40	1.93	2.08	2.41	4.07	3.60	ns

Note 1: Software default selection highlighted in gray.

2: For specific junction temperature and voltage supply levels, refer to Table 2-6 for derating values.

TABLE 2-44: 3.3V LVTTL/3.3V LVCMOS LOW SLEW COMMERCIAL-CASE CONDITIONS: T_J = 70 °C, WORST-CASE VCC = 1.425V, WORST-CASE VCCI = 3.0V APPLICABLE TO STANDARD PLUS I/O BANKS

Drive Strength	Speed Grade	t_{DOUT}	t_{DP}	t_{DIN}	t_{PY}	t_{EOUT}	t_{ZL}	t_{ZH}	t_{LZ}	t_{HZ}	t_{ZLS}	t_{ZHS}	Units
2 mA	Std.	0.66	9.68	0.04	1.00	0.43	9.86	8.42	2.28	2.21	12.09	10.66	ns
	–1	0.56	8.23	0.04	0.85	0.36	8.39	7.17	1.94	1.88	10.29	9.07	ns
	–2	0.49	7.23	0.03	0.75	0.32	7.36	6.29	1.70	1.65	9.03	7.96	ns
4 mA	Std.	0.66	9.68	0.04	1.00	0.43	9.86	8.42	2.28	2.21	12.09	10.66	ns
	–1	0.56	8.23	0.04	0.85	0.36	8.39	7.17	1.94	1.88	10.29	9.07	ns
	–2	0.49	7.23	0.03	0.75	0.32	7.36	6.29	1.70	1.65	9.03	7.96	ns
6 mA	Std.	0.66	6.70	0.04	1.00	0.43	6.82	5.89	2.58	2.74	9.06	8.12	ns
	–1	0.56	5.70	0.04	0.85	0.36	5.80	5.01	2.20	2.33	7.71	6.91	ns
	–2	0.49	5.00	0.03	0.75	0.32	5.10	4.40	1.93	2.05	6.76	6.06	ns
8 mA	Std.	0.66	6.70	0.04	1.00	0.43	6.82	5.89	2.58	2.74	9.06	8.12	ns
	–1	0.56	5.70	0.04	0.85	0.36	5.80	5.01	2.20	2.33	7.71	6.91	ns
	–2	0.49	5.00	0.03	0.75	0.32	5.10	4.40	1.93	2.05	6.76	6.06	ns
12 mA	Std.	0.66	5.05	0.04	1.00	0.43	5.14	4.51	2.79	3.08	7.38	6.75	ns
	–1	0.56	4.29	0.04	0.85	0.36	4.37	3.84	2.38	2.62	6.28	5.74	ns
	–2	0.49	3.77	0.03	0.75	0.32	3.84	3.37	2.09	2.30	5.51	5.04	ns
16 mA	Std.	0.66	5.05	0.04	1.00	0.43	5.14	4.51	2.79	3.08	7.38	6.75	ns
	–1	0.56	4.29	0.04	0.85	0.36	4.37	3.84	2.38	2.62	6.28	5.74	ns
	–2	0.49	3.77	0.03	0.75	0.32	3.84	3.37	2.09	2.30	5.51	5.04	ns

Note: For specific junction temperature and voltage supply levels, refer to Table 2-6 for derating values.

TABLE 2-45: 3.3 V LVTTL / 3.3 V LVCMOS HIGH SLEW COMMERCIAL-CASE CONDITIONS: T_J = 70 °C, WORST-CASE VCC = 1.425V, WORST-CASE VCCI = 3.0V APPLICABLE TO STANDARD I/O BANKS

Drive Strength	Speed Grade	t_{DOUT}	t_{DP}	t_{DIN}	t_{PY}	t_{EOUT}	t_{ZL}	t_{ZH}	t_{LZ}	t_{HZ}	Units
2 mA	Std.	0.66	7.07	0.04	1.00	0.43	7.20	6.23	2.07	2.15	ns
	–1	0.56	6.01	0.04	0.85	0.36	6.12	5.30	1.76	1.83	ns
	–2	0.49	5.28	0.03	0.75	0.32	5.37	4.65	1.55	1.60	ns
4 mA	Std.	0.66	7.07	0.04	1.00	0.43	7.20	6.23	2.07	2.15	ns
	–1	0.56	6.01	0.04	0.85	0.36	6.12	5.30	1.76	1.83	ns
	–2	0.49	5.28	0.03	0.75	0.32	5.37	4.65	1.55	1.60	ns
6 mA	Std.	0.66	4.41	0.04	1.00	0.43	4.49	3.75	2.39	2.69	ns
	–1	0.56	3.75	0.04	0.85	0.36	3.82	3.19	2.04	2.29	ns
	–2	0.49	3.29	0.03	0.75	0.32	3.36	2.80	1.79	2.01	ns
8 mA	Std.	0.66	4.41	0.04	1.00	0.43	4.49	3.75	2.39	2.69	ns
	–1	0.56	3.75	0.04	0.85	0.36	3.82	3.19	2.04	2.29	ns
	–2	0.49	3.29	0.03	0.75	0.32	3.36	2.80	1.79	2.01	ns

Note 1: Software default selection highlighted in gray.

2: For specific junction temperature and voltage supply levels, refer to Table 2-6 for derating values.

TABLE 2-46: 3.3 V LVTTL / 3.3 V LVCMOS LOW SLEW COMMERCIAL-CASE CONDITIONS: T_J = 70°C, WORST-CASE VCC = 1.425V, WORST-CASE VCCI = 3.0V APPLICABLE TO STANDARD I/O BANKS

Drive Strength	Speed Grade	t_{DOUT}	t_{DP}	t_{DIN}	t_{PY}	t_{EOUT}	t_{ZL}	t_{ZH}	t_{LZ}	t_{HZ}	Units
2 mA	Std.	0.66	9.46	0.04	1.00	0.43	9.64	8.54	2.07	2.04	ns
	–1	0.56	8.05	0.04	0.85	0.36	8.20	7.27	1.76	1.73	ns
	–2	0.49	7.07	0.03	0.75	0.32	7.20	6.38	1.55	1.52	ns
4 mA	Std.	0.66	9.46	0.04	1.00	0.43	9.64	8.54	2.07	2.04	ns
	–1	0.56	8.05	0.04	0.85	0.36	8.20	7.27	1.76	1.73	ns
	–2	0.49	7.07	0.03	0.75	0.32	7.20	6.38	1.55	1.52	ns
6 mA	Std.	0.66	6.57	0.04	1.00	0.43	6.69	5.98	2.40	2.57	ns
	–1	0.56	5.59	0.04	0.85	0.36	5.69	5.09	2.04	2.19	ns
	–2	0.49	4.91	0.03	0.75	0.32	5.00	4.47	1.79	1.92	ns
8 mA	Std.	0.66	6.57	0.04	1.00	0.43	6.69	5.98	2.40	2.57	ns
	–1	0.56	5.59	0.04	0.85	0.36	5.69	5.09	2.04	2.19	ns
	–2	0.49	4.91	0.03	0.75	0.32	5.00	4.47	1.79	1.92	ns

Note: For specific junction temperature and voltage supply levels, refer to Table 2-6 for derating values.

© 2023 Microchip Technology Inc. and its subsidiaries

2.3.4.2 3.3V LVCMOS Wide Range

TABLE 2-47: MINIMUM AND MAXIMUM DC INPUT AND OUTPUT LEVELS APPLICABLE TO ADVANCED I/O BANKS

3.3 V LVCMOS Wide Range	Equiv. Software Default Drive Strength Option[1]	VIL		VIH		VOL	VOH	IOL	IOH	IOSL	IOSH	IIL[2]	IIH[3]
Drive Strength		Min V	Max V	Min V	Max V	Max V	Min V	µA	µA	Max mA[4]	Max mA[4]	µA[5]	µA[5]
100 µA	2 mA	–0.3	0.8	2	3.6	0.2	VDD – 0.2	100	100	25	27	10	10
100 µA	4 mA	–0.3	0.8	2	3.6	0.2	VDD – 0.2	100	100	25	27	10	10
100 µA	6 mA	–0.3	0.8	2	3.6	0.2	VDD – 0.2	100	100	51	54	10	10
100 µA	8 mA	–0.3	0.8	2	3.6	0.2	VDD – 0.2	100	100	51	54	10	10
100 µA	12 mA	–0.3	0.8	2	3.6	0.2	VDD – 0.2	100	100	103	109	10	10
100 µA	16 mA	–0.3	0.8	2	3.6	0.2	VDD – 0.2	100	100	132	127	10	10
100 µA	24 mA	–0.3	0.8	2	3.6	0.2	VDD – 0.2	100	100	268	181	10	10

Note 1: The minimum drive strength for any LVCMOS 3.3V software configuration when run in wide range is ±100 µA. Drive strength displayed in the software is supported for normal range only. For a detailed I/V curve, refer to the IBIS models.

2: IIL is the input leakage current per I/O pin over recommended operation conditions where –0.3V < VIN < VIL.

3: IIH is the input leakage current per I/O pin over recommended operating conditions VIH < VIN < VCCI. Input current is larger when operating outside recommended ranges

4: Currents are measured at 85 °C junction temperature.

5: All LVMCOS 3.3V software macros support LVCMOS 3.3V wide range as specified in the JESD8-B specification.

6: Software default selection highlighted in gray.

TABLE 2-48: MINIMUM AND MAXIMUM DC INPUT AND OUTPUT LEVELS APPLICABLE TO STANDARD PLUS I/O BANKS

3.3 V LVCMOS Wide Range	Equiv. Software Default Drive Strength Option[1]	VIL		VIH		VOL	VOH	IOL	IOH	IOSL	IOSH	IIL[2]	IIH[3]
Drive Strength		Min V	Max V	Min V	Max V	Max V	Min V	µA	µA	Max mA[4]	Max mA[4]	µA[5]	µA[5]
100 µA	2 mA	–0.3	0.8	2	3.6	0.2	VDD – 0.2	100	100	25	27	10	10
100 µA	4 mA	–0.3	0.8	2	3.6	0.2	VDD – 0.2	100	100	25	27	10	10
100 µA	6 mA	–0.3	0.8	2	3.6	0.2	VDD – 0.2	100	100	51	54	10	10
100 µA	8 mA	–0.3	0.8	2	3.6	0.2	VDD – 0.2	100	100	51	54	10	10
100 µA	12 mA	–0.3	0.8	2	3.6	0.2	VDD – 0.2	100	100	103	109	10	10

TABLE 2-48: MINIMUM AND MAXIMUM DC INPUT AND OUTPUT LEVELS APPLICABLE TO STANDARD PLUS I/O BANKS

3.3 V LVCMOS Wide Range	Equiv. Software Default Drive Strength Option[1]	VIL		VIH		VOL	VOH	IOL	IOH	IOSL	IOSH	IIL[2]	IIH[3]
Drive Strength		Min V	Max V	Min V	Max V	Max V	Min V	µA	µA	Max mA[4]	Max mA[4]	µA[5]	µA[5]
100 µA	16 mA	–0.3	0.8	2	3.6	0.2	VDD – 0.2	100	100	103	109	10	10

Note 1: The minimum drive strength for any LVCMOS 3.3V software configuration when run in wide range is ±100 µA. Drive strength displayed in the software is supported for normal range only. For a detailed I/V curve, refer to the IBIS models.

2: IIL is the input leakage current per I/O pin over recommended operation conditions where –0.3V < VIN < VIL.

3: IIH is the input leakage current per I/O pin over recommended operating conditions VIH < VIN < VCCI. Input current is larger when operating outside recommended ranges

4: Currents are measured at 85 °C junction temperature.

5: All LVMCOS 3.3V software macros support LVCMOS 3.3V wide range as specified in the JESD8-B specification.

6: Software default selection highlighted in gray.

TABLE 2-49: MINIMUM AND MAXIMUM DC INPUT AND OUTPUT LEVELS APPLICABLE TO STANDARD I/O BANKS

3.3 V LVCMOS Wide Range	Equiv. Software Default Drive Strength Option[1]	VIL		VIH		VOL	VOH	IOL	IOH	IOSL	IOSH	IIL[2]	IIH[3]
Drive Strength		Min V	Max V	Min V	Max V	Max V	Min V	µA	µA	Max mA[4]	Max mA[4]	µA[5]	µA[5]
100 µA	2 mA	–0.3	0.8	2	3.6	0.2	VDD – 0.2	100	100	25	27	10	10
100 µA	4 mA	–0.3	0.8	2	3.6	0.2	VDD – 0.2	100	100	25	27	10	10
100 µA	6 mA	–0.3	0.8	2	3.6	0.2	VDD – 0.2	100	100	51	54	10	10
100 µA	8 mA	–0.3	0.8	2	3.6	0.2	VDD – 0.2	100	100	51	54	10	10

Note 1: The minimum drive strength for any LVCMOS 3.3V software configuration when run in wide range is ±100 µA. Drive strength displayed in the software is supported for normal range only. For a detailed I/V curve, refer to the IBIS models.

2: IIL is the input leakage current per I/O pin over recommended operation conditions where –0.3V < VIN < VIL.

3: IIH is the input leakage current per I/O pin over recommended operating conditions VIH < VIN < VCCI. Input current is larger when operating outside recommended ranges

4: Currents are measured at 85 °C junction temperature.

5: All LVMCOS 3.3V software macros support LVCMOS 3.3V wide range as specified in the JESD8-B specification.

6: Software default selection highlighted in gray.

© 2023 Microchip Technology Inc. and its subsidiaries

2.3.4.2.1 Timing Characteristics

TABLE 2-50: 3.3V LVTTL/3.3V LVCMOS HIGH SLEW COMMERCIAL-CASE CONDITIONS: T_J = 70°C, WORST-CASE VCC = 1.425V, WORST-CASE VCCI = 3.0V APPLICABLE TO ADVANCED I/O BANKS

Drive Strength	Equiv. Software Default Drive Strength Option[1]	Speed Grade	t_{DOUT}	t_{DP}	t_{DIN}	t_{PY}	t_{EOUT}	t_{ZL}	t_{ZH}	t_{LZ}	t_{HZ}	t_{ZLS}	t_{ZHS}	Units
100 µA	4 mA	Std.	0.60	11.84	0.04	1.02	0.43	11.84	10.00	4.10	4.04	15.23	13.40	ns
		–1	0.51	10.07	0.04	0.86	0.36	10.07	8.51	3.48	3.44	12.96	11.40	ns
		–2	0.45	8.84	0.03	0.76	0.32	8.84	7.47	3.06	3.02	11.38	10.00	ns
100 µA	6 mA	Std.	0.60	7.59	0.04	1.02	0.43	7.59	6.18	4.62	4.95	10.98	9.57	ns
		–1	0.51	6.45	0.04	0.86	0.36	6.45	5.25	3.93	4.21	9.34	8.14	ns
		–2	0.45	5.67	0.03	0.76	0.32	5.67	4.61	3.45	3.70	8.20	7.15	ns
100 µA	8 mA	Std.	0.60	7.59	0.04	1.02	0.43	7.59	6.18	4.62	4.95	10.98	9.57	ns
		–1	0.51	6.45	0.04	0.86	0.36	6.45	5.25	3.93	4.21	9.34	8.14	ns
		–2	0.45	5.67	0.03	0.76	0.32	5.67	4.61	3.45	3.70	8.20	7.15	ns
100 µA	12 mA	Std.	0.60	5.46	0.04	1.02	0.43	5.46	4.29	4.97	5.54	8.86	7.68	ns
		–1	0.51	4.65	0.04	0.86	0.36	4.65	3.65	4.22	4.71	7.53	6.54	ns
		–2	0.45	4.08	0.03	0.76	0.32	4.08	3.20	3.71	4.14	6.61	5.74	ns
100 µA	16 mA	Std.	0.60	5.15	0.04	1.02	0.43	5.15	3.89	5.04	5.69	8.55	7.29	ns
		–1	0.51	4.38	0.04	0.86	0.36	4.38	3.31	4.29	4.84	7.27	6.20	ns
		–2	0.45	3.85	0.03	0.76	0.32	3.85	2.91	3.77	4.25	6.38	5.44	ns
100 µA	24 mA	Std.	0.60	4.75	0.04	1.02	0.43	4.75	3.22	5.14	6.28	8.15	6.61	ns
		–1	0.51	4.04	0.04	0.86	0.36	4.04	2.74	4.37	5.34	6.93	5.62	ns
		–2	0.45	3.55	0.03	0.76	0.32	3.55	2.40	3.84	4.69	6.09	4.94	ns

Note 1: The minimum drive strength for any LVCMOS 3.3V software configuration when run in wide range is ±100 µA. Drive strength displayed in the software is supported for normal range only. For a detailed I/V curve, refer to the IBIS models.

2: Software default selection highlighted in gray.

3: For specific junction temperature and voltage supply levels, refer to Table 2-6 for derating values.

TABLE 2-51: 3.3V LVTTL/3.3V LVCMOS LOW SLEW COMMERCIAL-CASE CONDITIONS: T_J = 70°C, WORST-CASE VCC = 1.425V, WORST-CASE VCCI = 3.0V APPLICABLE TO ADVANCED I/O BANKS

Drive Strength	Equiv. Software Default Drive Strength Option[1]	Speed Grade	t_{DOUT}	t_{DP}	t_{DIN}	t_{PY}	t_{EOUT}	t_{ZL}	t_{ZH}	t_{LZ}	t_{HZ}	t_{ZLS}	t_{ZHS}	Units
100 µA	2 mA	Std.	0.60	15.86	0.04	1.54	0.43	15.86	13.51	4.09	3.80	19.25	16.90	ns
		–1	0.51	13.49	0.04	1.31	0.36	13.49	11.49	3.48	3.23	16.38	14.38	ns
		–2	0.45	11.84	0.03	1.15	0.32	11.84	10.09	3.05	2.84	14.38	12.62	ns
100 µA	4 mA	Std.	0.60	11.25	0.04	1.54	0.43	11.25	9.54	4.61	4.70	14.64	12.93	ns
		–1	0.51	9.57	0.04	1.31	0.36	9.57	8.11	3.92	4.00	12.46	11.00	ns
		–2	0.45	8.40	0.03	1.15	0.32	8.40	7.12	3.44	3.51	10.93	9.66	ns
100 µA	6 mA	Std.	0.60	11.25	0.04	1.54	0.43	11.25	9.54	4.61	4.70	14.64	12.93	ns
		–1	0.51	9.57	0.04	1.31	0.36	9.57	8.11	3.92	4.00	12.46	11.00	ns
		–2	0.45	8.40	0.03	1.15	0.32	8.40	7.12	3.44	3.51	10.93	9.66	ns
100 µA	8 mA	Std.	0.60	8.63	0.04	1.54	0.43	8.63	7.39	4.96	5.28	12.02	10.79	ns
		–1	0.51	7.34	0.04	1.31	0.36	7.34	6.29	4.22	4.49	10.23	9.18	ns
		–2	0.45	6.44	0.03	1.15	0.32	6.44	5.52	3.70	3.94	8.98	8.06	ns
100 µA	16 mA	Std.	0.60	8.05	0.04	1.54	0.43	8.05	6.93	5.03	5.43	11.44	10.32	ns
		–1	0.51	6.85	0.04	1.31	0.36	6.85	5.90	4.28	4.62	9.74	8.78	ns
		–2	0.45	6.01	0.03	1.15	0.32	6.01	5.18	3.76	4.06	8.55	7.71	ns
100 µA	24 mA	Std.	0.60	7.50	0.04	1.54	0.43	7.50	6.90	5.13	6.00	10.89	10.29	ns
		–1	0.51	6.38	0.04	1.31	0.36	6.38	5.87	4.36	5.11	9.27	8.76	ns
		–2	0.45	5.60	0.03	1.15	0.32	5.60	5.15	3.83	4.48	8.13	7.69	ns

Note 1: The minimum drive strength for any LVCMOS 3.3 V software configuration when run in wide range is ±100 µA. Drive strength displayed in the software is supported for normal range only. For a detailed I/V curve, refer to the IBIS models.

2: For specific junction temperature and voltage supply levels, refer to Table 2-6 for derating values.

TABLE 2-52: 3.3V LVTTL/3.3V LVCMOS HIGH SLEW COMMERCIAL-CASE CONDITIONS: T_J = 70°C, WORST-CASE VCC = 1.425V, WORST-CASE VCCI = 3.0V APPLICABLE TO STANDARD PLUS I/O BANKS

Drive Strength	Equiv. Software Default Drive Strength Option[1]	Speed Grade	t_{DOUT}	t_{DP}	t_{DIN}	t_{PY}	t_{EOUT}	t_{ZL}	t_{ZH}	t_{LZ}	t_{HZ}	t_{ZLS}	t_{ZHS}	Units
100 µA	2 mA	Std.	0.60	11.14	0.04	1.52	0.43	11.14	9.54	3.51	3.61	14.53	12.94	ns
		–1	0.51	9.48	0.04	1.29	0.36	9.48	8.12	2.99	3.07	12.36	11.00	ns
		–2	0.45	8.32	0.03	1.14	0.32	8.32	7.13	2.62	2.70	10.85	9.66	ns

© 2023 Microchip Technology Inc. and its subsidiaries

TABLE 2-52: 3.3V LVTTL/3.3V LVCMOS HIGH SLEW COMMERCIAL-CASE CONDITIONS: T_J = 70°C, WORST-CASE VCC = 1.425V, WORST-CASE VCCI = 3.0V APPLICABLE TO STANDARD PLUS I/O BANKS

Drive Strength	Equiv. Software Default Drive Strength Option[1]	Speed Grade	t_{DOUT}	t_{DP}	t_{DIN}	t_{PY}	t_{EOUT}	t_{ZL}	t_{ZH}	t_{LZ}	t_{HZ}	t_{ZLS}	t_{ZHS}	Units
100 µA	4 mA	Std.	0.60	6.96	0.04	1.52	0.43	6.96	5.79	3.99	4.45	10.35	9.19	ns
		–1	0.51	5.92	0.04	1.29	0.36	5.92	4.93	3.39	3.78	8.81	7.82	ns
		–2	0.45	5.20	0.03	1.14	0.32	5.20	4.33	2.98	3.32	7.73	6.86	ns
100 µA	6 mA	Std.	0.60	6.96	0.04	1.52	0.43	6.96	5.79	3.99	4.45	10.35	9.19	ns
		–1	0.51	5.92	0.04	1.29	0.36	5.92	4.93	3.39	3.78	8.81	7.82	ns
		–2	0.45	5.20	0.03	1.14	0.32	5.20	4.33	2.98	3.32	7.73	6.86	ns
100 µA	8 mA	Std.	0.60	4.89	0.04	1.52	0.43	4.89	3.92	4.31	4.98	8.28	7.32	ns
		–1	0.51	4.16	0.04	1.29	0.36	4.16	3.34	3.67	4.24	7.04	6.22	ns
		–2	0.45	3.65	0.03	1.14	0.32	3.65	2.93	3.22	3.72	6.18	5.46	ns
100 µA	16 mA	Std.	0.60	4.89	0.04	1.52	0.43	4.89	3.92	4.31	4.98	8.28	7.32	ns
		–1	0.51	4.16	0.04	1.29	0.36	4.16	3.34	3.67	4.24	7.04	6.22	ns
		–2	0.45	3.65	0.03	1.14	0.32	3.65	2.93	3.22	3.72	6.18	5.46	ns

Note 1: The minimum drive strength for any LVCMOS 3.3V software configuration when run in wide range is ±100 µA. Drive strength displayed in the software is supported for normal range only. For a detailed I/V curve, refer to the IBIS models.

2: Software default selection highlighted in gray.

3: For specific junction temperature and voltage supply levels, refer to Table 2-6 for derating values.

3.3V LVTTL/3.3V LVCMOS LOW SLEW COMMERCIAL-CASE CONDITIONS: T_J = 70 °C, WORST-CASE VCC = 1.425V, WORST-CASE VCCI = 3.0V APPLICABLE TO STANDARD PLUS I/O BANKS

Drive Strength	Equiv. Software Default Drive Strength Option[1]	Speed Grade	t_{DOUT}	t_{DP}	t_{DIN}	t_{PY}	t_{EOUT}	t_{ZL}	t_{ZH}	t_{LZ}	t_{HZ}	t_{ZLS}	t_{ZHS}	Units
100 µA	2 mA	Std.	0.60	14.97	0.04	1.52	0.43	14.97	12.79	3.52	3.41	18.36	16.18	ns
		–1	0.51	12.73	0.04	1.29	0.36	12.73	10.88	2.99	2.90	15.62	13.77	ns
		–2	0.45	11.18	0.03	1.14	0.32	11.18	9.55	2.63	2.55	13.71	12.08	ns
100 µA	4 mA	Std.	0.60	10.36	0.04	1.52	0.43	10.36	8.93	3.99	4.24	13.75	12.33	ns
		–1	0.51	8.81	0.04	1.29	0.36	8.81	7.60	3.39	3.60	11.70	10.49	ns
		–2	0.45	7.74	0.03	1.14	0.32	7.74	6.67	2.98	3.16	10.27	9.21	ns
100 µA	6 mA	Std.	0.60	10.36	0.04	1.52	0.43	10.36	8.93	3.99	4.24	13.75	12.33	ns
		–1	0.51	8.81	0.04	1.29	0.36	8.81	7.60	3.39	3.60	11.70	10.49	ns
		–2	0.45	7.74	0.03	1.14	0.32	7.74	6.67	2.98	3.16	10.27	9.21	ns

3.3V LVTTL/3.3V LVCMOS LOW SLEW COMMERCIAL-CASE CONDITIONS: T_J = 70 °C, WORST-CASE VCC = 1.425V, WORST-CASE VCCI = 3.0V APPLICABLE TO STANDARD PLUS I/O BANKS

Drive Strength	Equiv. Software Default Drive Strength Option[1]	Speed Grade	t_{DOUT}	t_{DP}	t_{DIN}	t_{PY}	t_{EOUT}	t_{ZL}	t_{ZH}	t_{LZ}	t_{HZ}	t_{ZLS}	t_{ZHS}	Units
100 µA	8 mA	Std.	0.60	7.81	0.04	1.52	0.43	7.81	6.85	4.32	4.76	11.20	10.24	ns
		–1	0.51	6.64	0.04	1.29	0.36	6.64	5.82	3.67	4.05	9.53	8.71	ns
		–2	0.45	5.83	0.03	1.14	0.32	5.83	5.11	3.22	3.56	8.36	7.65	ns
100 µA	16 mA	Std.	0.60	7.81	0.04	1.52	0.43	7.81	6.85	4.32	4.76	11.20	10.24	ns
		–1	0.51	6.64	0.04	1.29	0.36	6.64	5.82	3.67	4.05	9.53	8.71	ns
		–2	0.45	5.83	0.03	1.14	0.32	5.83	5.11	3.22	3.56	8.36	7.65	ns

Note 1: The minimum drive strength for any LVCMOS 3.3 V software configuration when run in wide range is ±100 µA. Drive strength displayed in the software is supported for normal range only. For a detailed I/V curve, refer to the IBIS models.

2: For specific junction temperature and voltage supply levels, refer to Table 2-6 for derating values.

TABLE 2-53: 3.3V LVTTL/3.3V LVCMOS HIGH SLEW COMMERCIAL-CASE CONDITIONS: TJ = 70°C, WORST-CASE VCC = 1.425V, WORST-CASE VCCI = 3.0V APPLICABLE TO STANDARD I/O BANKS

Drive Strength	Equiv. Software Default Drive Strength Option[1]	Speed Grade	t_{DOUT}	t_{DP}	t_{DIN}	t_{PY}	t_{EOUT}	t_{ZL}	t_{ZH}	t_{LZ}	t_{HZ}	Units
100 µA	2 mA	Std.	0.60	10.93	0.04	1.52	0.43	10.93	9.46	3.20	3.32	ns
		–1	0.51	9.29	0.04	1.29	0.36	9.29	8.04	2.72	2.82	ns
		–2	0.45	8.16	0.03	1.13	0.32	8.16	7.06	2.39	2.48	ns
100 µA	4 mA	Std.	0.60	10.93	0.04	1.52	0.43	10.93	9.46	3.20	3.32	ns
		–1	0.51	9.29	0.04	1.29	0.36	9.29	8.04	2.72	2.82	ns
		–2	0.45	8.16	0.03	1.13	0.32	8.16	7.06	2.39	2.48	ns
100 µA	6 mA	Std.	0.60	6.82	0.04	1.52	0.43	6.82	5.70	3.70	4.16	ns
		–1	0.51	5.80	0.04	1.29	0.36	5.80	4.85	3.15	3.54	ns
		–2	0.45	5.09	0.03	1.13	0.32	5.09	4.25	2.77	3.11	ns
100 µA	8 mA	Std.	0.60	6.82	0.04	1.52	0.43	6.82	5.70	3.70	4.16	ns

© 2023 Microchip Technology Inc. and its subsidiaries

TABLE 2-53: 3.3V LVTTL/3.3V LVCMOS HIGH SLEW COMMERCIAL-CASE CONDITIONS: TJ = 70°C, WORST-CASE VCC = 1.425V, WORST-CASE VCCI = 3.0V APPLICABLE TO STANDARD I/O BANKS

Drive Strength	Equiv. Software Default Drive Strength Option[1]	Speed Grade	t_{DOUT}	t_{DP}	t_{DIN}	t_{PY}	t_{EOUT}	t_{ZL}	t_{ZH}	t_{LZ}	t_{HZ}	Units
		–1	0.51	5.80	0.04	1.29	0.36	5.80	4.85	3.15	3.54	ns
		–2	0.45	5.09	0.03	1.13	0.32	5.09	4.25	2.77	3.11	ns

Note 1: The minimum drive strength for any LVCMOS 3.3 V software configuration when run in wide range is ±100 µA. Drive strength displayed in the software is supported for normal range only. For a detailed I/V curve, refer to the IBIS models.

2: Software default selection highlighted in gray.

3: For specific junction temperature and voltage supply levels, refer to Table 2-6 for derating values.

TABLE 2-54: 3.3V LVTTL/3.3V LVCMOS LOW SLEW COMMERCIAL-CASE CONDITIONS: T_J = 70°C, WORST-CASE VCC = 1.425V, WORST-CASE VCCI = 3.0V APPLICABLE TO STANDARD I/O BANKS

Drive Strength	Equiv. Software Default Drive Strength Option[1]	Speed Grade	t_{DOUT}	t_{DP}	t_{DIN}	t_{PY}	t_{EOUT}	t_{ZL}	t_{ZH}	t_{LZ}	t_{HZ}	Units
100 µA	2 mA	Std.	0.60	14.64	0.04	1.52	0.43	14.64	12.97	3.21	3.15	ns
		–1	0.51	12.45	0.04	1.29	0.36	12.45	11.04	2.73	2.68	ns
		–2	0.45	10.93	0.03	1.13	0.32	10.93	9.69	2.39	2.35	ns
100 µA	4 mA	Std.	0.60	14.64	0.04	1.52	0.43	14.64	12.97	3.21	3.15	ns
		–1	0.51	12.45	0.04	1.29	0.36	12.45	11.04	2.73	2.68	ns
		–2	0.45	10.93	0.03	1.13	0.32	10.93	9.69	2.39	2.35	ns
100 µA	6 mA	Std.	0.60	10.16	0.04	1.52	0.43	10.16	9.08	3.71	3.98	ns
		–1	0.51	8.64	0.04	1.29	0.36	8.64	7.73	3.15	3.39	ns
		–2	0.45	7.58	0.03	1.13	0.32	7.58	6.78	2.77	2.97	ns
100 µA	8 mA	Std.	0.60	10.16	0.04	1.52	0.43	10.16	9.08	3.71	3.98	ns
		–1	0.51	8.64	0.04	1.29	0.36	8.64	7.73	3.15	3.39	ns
		–2	0.45	7.58	0.03	1.13	0.32	7.58	6.78	2.77	2.97	ns

Note 1: The minimum drive strength for any LVCMOS 3.3 V software configuration when run in wide range is ±100 µA. Drive strength displayed in the software is supported for normal range only. For a detailed I/V curve, refer to the IBIS models.

2: For specific junction temperature and voltage supply levels, refer to Table 2-6 for derating values.

2.3.4.3 2.5V LVCMOS

Low-Voltage CMOS for 2.5V is an extension of the LVCMOS standard (JESD8-5) used for general-purpose 2.5V applications.

TABLE 2-55: MINIMUM AND MAXIMUM DC INPUT AND OUTPUT LEVELS APPLICABLE TO ADVANCED I/O BANKS

2.5 V LVCMOS	VIL		VIH		VOL	VOH	IOL	IOH	IOSL	IOSH	IIL1	IIH[2]
Drive Strength	Min. V	Max. V	Min. V	Max. V	Max. V	Min. V	mA	mA	Max. mA[3]	Max. mA[3]	µA[4]	µA[4]
2 mA	–0.3	0.7	1.7	2.7	0.7	1.7	2	2	18	16	10	10
4 mA	–0.3	0.7	1.7	2.7	0.7	1.7	4	4	18	16	10	10
6 mA	–0.3	0.7	1.7	2.7	0.7	1.7	6	6	37	32	10	10
8 mA	–0.3	0.7	1.7	2.7	0.7	1.7	8	8	37	32	10	10
12 mA	–0.3	0.7	1.7	2.7	0.7	1.7	12	12	74	65	10	10
16 mA	–0.3	0.7	1.7	2.7	0.7	1.7	16	16	87	83	10	10
24 mA	–0.3	0.7	1.7	2.7	0.7	1.7	24	24	124	169	10	10

Note 1: IIL is the input leakage current per I/O pin over recommended operation conditions where –0.3V < VIN < VIL.

2: IIH is the input leakage current per I/O pin over recommended operating conditions VIH < VIN < VCCI. Input current is larger when operating outside recommended ranges

3: Currents are measured at high temperature (100 °C junction temperature) and maximum voltage.

4: Currents are measured at 85 °C junction temperature.

5: Software default selection highlighted in gray.

TABLE 2-56: MINIMUM AND MAXIMUM DC INPUT AND OUTPUT LEVELS APPLICABLE TO STANDARD PLUS I/O BANKS

2.5 V LVCMOS	VIL		VIH		VOL	VOH	IOL	IOH	IOSL	IOSH	IIL[1]	IIH[2]
Drive Strength	Min. V	Max. V	Min. V	Max. V	Max. V	Min. V	mA	mA	Max. mA[3]	Max. mA[3]	µA[4]	µA[4]
2 mA	–0.3	0.7	1.7	2.7	0.7	1.7	2	2	18	16	10	10
4 mA	–0.3	0.7	1.7	2.7	0.7	1.7	4	4	18	16	10	10
6 mA	–0.3	0.7	1.7	2.7	0.7	1.7	6	6	37	32	10	10
8 mA	–0.3	0.7	1.7	2.7	0.7	1.7	8	8	37	32	10	10
12 mA	–0.3	0.7	1.7	2.7	0.7	1.7	12	12	74	65	10	10

Note 1: IIL is the input leakage current per I/O pin over recommended operation conditions where –0.3V < VIN < VIL.

2: IIH is the input leakage current per I/O pin over recommended operating conditions VIH < VIN < VCCI. Input current is larger when operating outside recommended ranges

3: Currents are measured at high temperature (100 °C junction temperature) and maximum voltage.

4: Currents are measured at 85 °C junction temperature.

5: Software default selection highlighted in gray.

© 2023 Microchip Technology Inc. and its subsidiaries

TABLE 2-57: MINIMUM AND MAXIMUM DC INPUT AND OUTPUT LEVELS APPLICABLE TO STANDARD I/O BANKS

2.5 V LVCMOS	VIL		VIH		VOL	VOH	IOL	IOH	IOSL	IOSH	IIL[1]	IIH[2]
Drive Strength	Min. V	Max., V	Min. V	Max. V	Max. V	Min. V	mA	mA	Max. mA[3]	Max. mA[3]	µA[4]	µA[4]
2 mA	–0.3	0.7	1.7	3.6	0.7	1.7	2	2	16	18	10	10
4 mA	–0.3	0.7	1.7	3.6	0.7	1.7	4	4	16	18	10	10
6 mA	–0.3	0.7	1.7	3.6	0.7	1.7	6	6	32	37	10	10
8 mA	–0.3	0.7	1.7	3.6	0.7	1.7	8	8	32	37	10	10

Note 1: IIL is the input leakage current per I/O pin over recommended operation conditions where –0.3 V < VIN < VIL.

2: IIH is the input leakage current per I/O pin over recommended operating conditions VIH < VIN < VCCI. Input current is larger when operating outside recommended ranges.

3: Currents are measured at high temperature (100 °C junction temperature) and maximum voltage.

4: Currents are measured at 85 °C junction temperature.

5: Software default selection highlighted in gray.

TABLE 2-58: AC WAVEFORMS, MEASURING POINTS, AND CAPACITIVE LOADS

Input Low (V)	Input High (V)	Measuring Point* (V)	C_{LOAD} (pF)
0	2.5	1.2	35

Note: *Measuring point = Vtrip. See Table 2-22 for a complete table of trip points.

FIGURE 2-8: AC LOADING

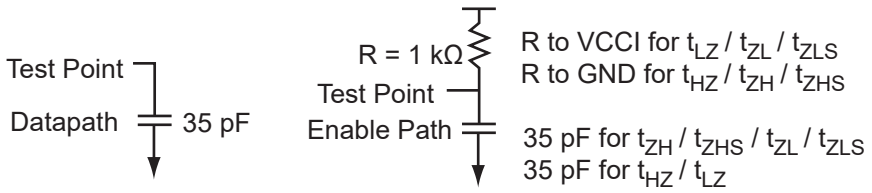

2.3.4.3.1 Timing Characteristics

TABLE 2-59: 2.5V LVCMOS HIGH SLEW COMMERCIAL-CASE CONDITIONS: T_J = 70 °C, WORST-CASE VCC = 1.425V, WORST-CASE VCCI = 2.3V APPLICABLE TO ADVANCED I/O BANKS

Drive Strength	Speed Grade	t_{DOUT}	t_{DP}	t_{DIN}	t_{PY}	t_{EOUT}	t_{ZL}	t_{ZH}	t_{LZ}	t_{HZ}	t_{ZLS}	t_{ZHS}	Units
4 mA	Std.	0.60	8.66	0.04	1.31	0.43	7.83	8.66	2.68	2.30	10.07	10.90	ns
	–1	0.51	7.37	0.04	1.11	0.36	6.66	7.37	2.28	1.96	8.56	9.27	ns
	–2	0.45	6.47	0.03	0.98	0.32	5.85	6.47	2.00	1.72	7.52	8.14	ns
6 mA	Std.	0.60	5.17	0.04	1.31	0.43	5.04	5.17	3.05	3.00	7.27	7.40	ns
	–1	0.51	4.39	0.04	1.11	0.36	4.28	4.39	2.59	2.55	6.19	6.30	ns
	–2	0.45	3.86	0.03	0.98	0.32	3.76	3.86	2.28	2.24	5.43	5.53	ns
8 mA	Std.	0.60	5.17	0.04	1.31	0.43	5.04	5.17	3.05	3.00	7.27	7.40	ns
	–1	0.51	4.39	0.04	1.11	0.36	4.28	4.39	2.59	2.55	6.19	6.30	ns
	–2	0.45	3.86	0.03	0.98	0.32	3.76	3.86	2.28	2.24	5.43	5.53	ns
12 mA	Std.	0.60	3.56	0.04	1.31	0.43	3.63	3.43	3.30	3.44	5.86	5.67	ns
	–1	0.51	3.03	0.04	1.11	0.36	3.08	2.92	2.81	2.92	4.99	4.82	ns
	–2	0.45	2.66	0.03	0.98	0.32	2.71	2.56	2.47	2.57	4.38	4.23	ns
16 mA	Std.	0.60	3.35	0.04	1.31	0.43	3.41	3.06	3.36	3.55	5.65	5.30	ns
	–1	0.51	2.85	0.04	1.11	0.36	2.90	2.60	2.86	3.02	4.81	4.51	ns
	–2	0.45	2.50	0.03	0.98	0.32	2.55	2.29	2.51	2.65	4.22	3.96	ns
24 mA	Std.	0.60	3.09	0.04	1.31	0.43	3.15	2.44	3.44	4.00	5.38	4.68	ns
	–1	0.51	2.63	0.04	1.11	0.36	2.68	2.08	2.92	3.40	4.58	3.98	ns
	–2	0.45	2.31	0.03	0.98	0.32	2.35	1.82	2.57	2.98	4.02	3.49	ns

Note 1: Software default selection highlighted in gray.

2: For specific junction temperature and voltage supply levels, refer to Table 2-6 for derating values.

TABLE 2-60: 2.5V LVCMOS LOW SLEW COMMERCIAL-CASE CONDITIONS: T_J = 70 °C, WORST-CASE VCC = 1.425V, WORST-CASE VCCI = 2.3V APPLICABLE TO ADVANCED I/O BANKS

Drive Strength	Speed Grade	t_{DOUT}	t_{DP}	t_{DIN}	t_{PY}	t_{EOUT}	t_{ZL}	t_{ZH}	t_{LZ}	t_{HZ}	t_{ZLS}	t_{ZHS}	Units
4 mA	Std.	0.60	11.40	0.04	1.31	0.43	11.22	11.40	2.68	2.20	13.45	13.63	ns
	–1	0.51	9.69	0.04	1.11	0.36	9.54	9.69	2.28	1.88	11.44	11.60	ns
	–2	0.45	8.51	0.03	0.98	0.32	8.38	8.51	2.00	1.65	10.05	10.18	ns
6 mA	Std.	0.60	7.96	0.04	1.31	0.43	8.11	7.81	3.05	2.89	10.34	10.05	ns
	–1	0.51	6.77	0.04	1.11	0.36	6.90	6.65	2.59	2.46	8.80	8.55	ns
	–2	0.45	5.94	0.03	0.98	0.32	6.05	5.84	2.28	2.16	7.72	7.50	ns
8 mA	Std.	0.60	7.96	0.04	1.31	0.43	8.11	7.81	3.05	2.89	10.34	10.05	ns
	–1	0.51	6.77	0.04	1.11	0.36	6.90	6.65	2.59	2.46	8.80	8.55	ns

© 2023 Microchip Technology Inc. and its subsidiaries

TABLE 2-60: 2.5V LVCMOS LOW SLEW COMMERCIAL-CASE CONDITIONS: T_J = 70 °C, WORST-CASE VCC = 1.425V, WORST-CASE VCCI = 2.3V APPLICABLE TO ADVANCED I/O BANKS

Drive Strength	Speed Grade	t_{DOUT}	t_{DP}	t_{DIN}	t_{PY}	t_{EOUT}	t_{ZL}	t_{ZH}	t_{LZ}	t_{HZ}	t_{ZLS}	t_{ZHS}	Units
	–2	0.45	5.94	0.03	0.98	0.32	6.05	5.84	2.28	2.16	7.72	7.50	ns
12 mA	Std.	0.60	6.18	0.04	1.31	0.43	6.29	5.92	3.30	3.32	8.53	8.15	ns
	–1	0.51	5.26	0.04	1.11	0.36	5.35	5.03	2.81	2.83	7.26	6.94	ns
	–2	0.45	4.61	0.03	0.98	0.32	4.70	4.42	2.47	2.48	6.37	6.09	ns
16 mA	Std.	0.60	5.76	0.04	1.31	0.43	5.87	5.53	3.36	3.44	8.11	7.76	ns
	–1	0.51	4.90	0.04	1.11	0.36	4.99	4.70	2.86	2.92	6.90	6.60	ns
	–2	0.45	4.30	0.03	0.98	0.32	4.38	4.13	2.51	2.57	6.05	5.80	ns
24 mA	Std.	0.60	5.51	0.04	1.31	0.43	5.50	5.51	3.43	3.87	7.74	7.74	ns
	–1	0.51	4.68	0.04	1.11	0.36	4.68	4.68	2.92	3.29	6.58	6.59	ns
	–2	0.45	4.11	0.03	0.98	0.32	4.11	4.11	2.56	2.89	5.78	5.78	ns

Note: For specific junction temperature and voltage supply levels, refer to Table 2-6 for derating values.

TABLE 2-61: 2.5 V LVCMOS HIGH SLEW COMMERCIAL-CASE CONDITIONS: T_J = 70 °C, WORST-CASE VCC = 1.425 V, WORST-CASE VCCI = 2.3 V APPLICABLE TO STANDARD PLUS I/O BANKS

Drive Strength	Speed Grade	t_{DOUT}	t_{DP}	t_{DIN}	t_{PY}	t_{EOUT}	t_{ZL}	t_{ZH}	t_{LZ}	t_{HZ}	t_{ZLS}	t_{ZHS}	Units
4 mA	Std.	0.66	8.28	0.04	1.30	0.43	7.41	8.28	2.25	2.07	9.64	10.51	ns
	–1	0.56	7.04	0.04	1.10	0.36	6.30	7.04	1.92	1.76	8.20	8.94	ns
	–2	0.49	6.18	0.03	0.97	0.32	5.53	6.18	1.68	1.55	7.20	7.85	ns
6 mA	Std.	0.66	4.85	0.04	1.30	0.43	4.65	4.85	2.59	2.71	6.88	7.09	ns
	–1	0.56	4.13	0.04	1.10	0.36	3.95	4.13	2.20	2.31	5.85	6.03	ns
	–2	0.49	3.62	0.03	0.97	0.32	3.47	3.62	1.93	2.02	5.14	5.29	ns
8 mA	Std.	0.66	4.85	0.04	1.30	0.43	4.65	4.85	2.59	2.71	6.88	7.09	ns
	–1	0.56	4.13	0.04	1.10	0.36	3.95	4.13	2.20	2.31	5.85	6.03	ns
	–2	0.49	3.62	0.03	0.97	0.32	3.47	3.62	1.93	2.02	5.14	5.29	ns
12 mA	Std.	0.66	3.21	0.04	1.30	0.43	3.27	3.14	2.82	3.11	5.50	5.38	ns
	–1	0.56	2.73	0.04	1.10	0.36	2.78	2.67	2.40	2.65	4.68	4.57	ns
	–2	0.49	2.39	0.03	0.97	0.32	2.44	2.35	2.11	2.32	4.11	4.02	ns

Note 1: Software default selection highlighted in gray.

2: For specific junction temperature and voltage supply levels, refer to Table 2-6 for derating values.

TABLE 2-62: 2.5V LVCMOS LOW SLEW COMMERCIAL-CASE CONDITIONS: T_J = 70 °C, WORST-CASE VCC = 1.425V, WORST-CASE VCCI = 2.3V APPLICABLE TO STANDARD PLUS I/O BANKS

Drive Strength	Speed Grade	t_{DOUT}	t_{DP}	t_{DIN}	t_{PY}	t_{EOUT}	t_{ZL}	t_{ZH}	t_{LZ}	t_{HZ}	t_{ZLS}	t_{ZHS}	Units
4 mA	Std.	0.66	10.84	0.04	1.30	0.43	10.64	10.84	2.26	1.99	12.87	13.08	ns
	–1	0.56	9.22	0.04	1.10	0.36	9.05	9.22	1.92	1.69	10.95	11.12	ns
	–2	0.49	8.10	0.03	0.97	0.32	7.94	8.10	1.68	1.49	9.61	9.77	ns
6 mA	Std.	0.66	7.37	0.04	1.30	0.43	7.50	7.36	2.59	2.61	9.74	9.60	ns
	–1	0.56	6.27	0.04	1.10	0.36	6.38	6.26	2.20	2.22	8.29	8.16	ns
	–2	0.49	5.50	0.03	0.97	0.32	5.60	5.50	1.93	1.95	7.27	7.17	ns
8 mA	Std.	0.66	7.37	0.04	1.30	0.43	7.50	7.36	2.59	2.61	9.74	9.60	ns
	–1	0.56	6.27	0.04	1.10	0.36	6.38	6.26	2.20	2.22	8.29	8.16	ns
	–2	0.49	5.50	0.03	0.97	0.32	5.60	5.50	1.93	1.95	7.27	7.17	ns
12 mA	Std.	0.66	5.63	0.04	1.30	0.43	5.73	5.51	2.83	3.01	7.97	7.74	ns
	–1	0.56	4.79	0.04	1.10	0.36	4.88	4.68	2.41	2.56	6.78	6.59	ns
	–2	0.49	4.20	0.03	0.97	0.32	4.28	4.11	2.11	2.25	5.95	5.78	ns

Note: For specific junction temperature and voltage supply levels, refer to Table 2-6 for derating values.

TABLE 2-63: 2.5V LVCMOS HIGH SLEW COMMERCIAL-CASE CONDITIONS: T_J = 70 °C, WORST-CASE VCC = 1.425V, WORST-CASE VCCI = 3.0V APPLICABLE TO STANDARD I/O BANKS

Drive Strength	Speed Grade	t_{DOUT}	t_{DP}	t_{DIN}	t_{PY}	t_{EOUT}	t_{ZL}	t_{ZH}	t_{LZ}	t_{HZ}	Units
2 mA	Std.	0.66	8.20	0.04	1.29	0.43	7.24	8.20	2.03	1.91	ns
	–1	0.56	6.98	0.04	1.10	0.36	6.16	6.98	1.73	1.62	ns
	–2	0.49	6.13	0.03	0.96	0.32	5.41	6.13	1.52	1.43	ns
4 mA	Std.	0.66	8.20	0.04	1.29	0.43	7.24	8.20	2.03	1.91	ns
	–1	0.56	6.98	0.04	1.10	0.36	6.16	6.98	1.73	1.62	ns
	–2	0.49	6.13	0.03	0.96	0.32	5.41	6.13	1.52	1.43	ns
6 mA	Std.	0.66	4.77	0.04	1.29	0.43	4.55	4.77	2.38	2.55	ns
	–1	0.56	4.05	0.04	1.10	0.36	3.87	4.05	2.03	2.17	ns
	–2	0.49	3.56	0.03	0.96	0.32	3.40	3.56	1.78	1.91	ns
8 mA	Std.	0.66	4.77	0.04	1.29	0.43	4.55	4.77	2.38	2.55	ns
	–1	0.56	4.05	0.04	1.10	0.36	3.87	4.05	2.03	2.17	ns
	–2	0.49	3.56	0.03	0.96	0.32	3.40	3.56	1.78	1.91	ns

Note 1: Software default selection highlighted in gray.

2: For specific junction temperature and voltage supply levels, refer to Table 2-6 for derating values.

© 2023 Microchip Technology Inc. and its subsidiaries

TABLE 2-64: 2.5V LVCMOS LOW SLEW COMMERCIAL-CASE CONDITIONS: T_J = 70 °C, WORST-CASE VCC = 1.425V, WORST-CASE VCCI = 3.0V APPLICABLE TO STANDARD I/O BANKS

Drive Strength	Speed Grade	t_{DOUT}	t_{DP}	t_{DIN}	t_{PY}	t_{EOUT}	t_{ZL}	t_{ZH}	t_{LZ}	t_{HZ}	Units
2 mA	Std.	0.66	11.00	0.04	1.29	0.43	10.37	11.00	2.03	1.83	ns
	–1	0.56	9.35	0.04	1.10	0.36	8.83	9.35	1.73	1.56	ns
	–2	0.49	8.21	0.03	0.96	0.32	7.75	8.21	1.52	1.37	ns
4 mA	Std.	0.66	11.00	0.04	1.29	0.43	10.37	11.00	2.03	1.83	ns
	–1	0.56	9.35	0.04	1.10	0.36	8.83	9.35	1.73	1.56	ns
	–2	0.49	8.21	0.03	0.96	0.32	7.75	8.21	1.52	1.37	ns
6 mA	Std.	0.66	7.50	0.04	1.29	0.43	7.36	7.50	2.39	2.46	ns
	–1	0.56	6.38	0.04	1.10	0.36	6.26	6.38	2.03	2.10	ns
	–2	0.49	5.60	0.03	0.96	0.32	5.49	5.60	1.78	1.84	ns
8 mA	Std.	0.66	7.50	0.04	1.29	0.43	7.36	7.50	2.39	2.46	ns
	–1	0.56	6.38	0.04	1.10	0.36	6.26	6.38	2.03	2.10	ns
	–2	0.49	5.60	0.03	0.96	0.32	5.49	5.60	1.78	1.84	ns

Note: For specific junction temperature and voltage supply levels, refer to Table 2-6 for derating values.

2.3.4.4 1.8V LVCMOS

Low-voltage CMOS for 1.8V is an extension of the LVCMOS standard (JESD8-5) used for general-purpose 1.8V applications. It uses a 1.8V input buffer and a push-pull output buffer.

TABLE 2-65: MINIMUM AND MAXIMUM DC INPUT AND OUTPUT LEVELS APPLICABLE TO ADVANCED I/O BANKS

1.8V LVCMOS	VIL		VIH		VOL	VOH	IOL	IOH	IOSL	IOSH	IIL[1]	IIH[2]
Drive Strength	Min V	Max V	Min V	Max V	Max V	Min V	mA	mA	Max mA[3]	Max mA[3]	µA[4]	µA[4]
2 mA	–0.3	0.35 * VCCI	0.65 * VCCI	1.9	0.45	VCCI – 0.45	2	2	11	9	10	10
4 mA	–0.3	0.35 * VCCI	0.65 * VCCI	1.9	0.45	VCCI – 0.45	4	4	22	17	10	10
6 mA	–0.3	0.35 * VCCI	0.65 * VCCI	1.9	0.45	VCCI – 0.45	6	6	44	35	10	10
8 mA	–0.3	0.35 * VCCI	0.65 * VCCI	1.9	0.45	VCCI – 0.45	8	8	51	45	10	10

TABLE 2-65: MINIMUM AND MAXIMUM DC INPUT AND OUTPUT LEVELS APPLICABLE TO ADVANCED I/O BANKS

1.8V LVCMOS	VIL		VIH		VOL	VOH	IOL	IOH	IOSL	IOSH	IIL[1]	IIH[2]
Drive Strength	Min V	Max V	Min V	Max V	Max V	Min V	mA	mA	Max mA[3]	Max mA[3]	µA[4]	µA[4]
12 mA	–0.3	0.35 * VCCI	0.65 * VCCI	1.9	0.45	VCCI – 0.45	12	12	74	91	10	10
16 mA	–0.3	0.35 * VCCI	0.65 * VCCI	1.9	0.45	VCCI – 0.45	16	16	74	91	10	10

Note 1: IIL is the input leakage current per I/O pin over recommended operation conditions where –0.3 V < VIN < VIL.

2: IIH is the input leakage current per I/O pin over recommended operating conditions VIH < VIN < VCCI. Input current is larger when operating outside recommended ranges

3: Currents are measured at high temperature (100 °C junction temperature) and maximum voltage.

4: Currents are measured at 85 °C junction temperature.

5: Software default selection highlighted in gray.

TABLE 2-66: MINIMUM AND MAXIMUM DC INPUT AND OUTPUT LEVELS APPLICABLE TO STANDARD PLUS I/O I/O BANKS

1.8V LVCMOS	VIL		VIH		VOL	VOH	IOL	IOH	IOSL	IOSH	IIL[1]	IIH[2]
Drive Strength	Min V	Max V	Min V	Max V	Max V	Min V	mA	mA	Max mA[3]	Max mA[3]	µA[4]	µA[4]
2 mA	–0.3	0.35 * VCCI	0.65 * VCCI	3.6	0.45	VCCI – 0.45	2	2	11	9	10	10
4 mA	–0.3	0.35 * VCCI	0.65 * VCCI	3.6	0.45	VCCI – 0.45	4	4	22	17	10	10
6 mA	–0.3	0.35 * VCCI	0.65 * VCCI	3.6	0.45	VCCI – 0.45	6	6	44	35	10	10
8 mA	–0.3	0.35 * VCCI	0.65 * VCCI	3.6	0.45	VCCI – 0.45	8	8	44	35	10	10

Note 1: IIL is the input leakage current per I/O pin over recommended operation conditions where –0.3 V < VIN < VIL.

2: IIH is the input leakage current per I/O pin over recommended operating conditions VIH < VIN <V CCI. Input current is larger when operating outside recommended ranges

3: Currents are measured at high temperature (100 °C junction temperature) and maximum voltage.

4: Currents are measured at 85 °C junction temperature.

5: Software default selection highlighted in gray.

© 2023 Microchip Technology Inc. and its subsidiaries

TABLE 2-67: MINIMUM AND MAXIMUM DC INPUT AND OUTPUT LEVELS APPLICABLE TO STANDARD I/O BANKS

1.8V LVCMOS	VIL		VIH		VOL	VOH	IOL	IOH	IOSL	IOSH	IIL[1]	IIH[2]
Drive Strength	Min. V	Max. V	Min. V	Max. V	Max. V	Min. V	mA	mA	Max. mA[3]	Max. mA[3]	µA[4]	µA[4]
2 mA	–0.3	0.35 * VCCI	0.65 * VCCI	3.6	0.45	VCCI – 0.45	2	2	9	11	10	10
4 mA	–0.3	0.35 * VCCI	0.65 * VCCI	3.6	0.45	VCCI – 0.45	4	4	17	22	10	10

Note 1: IIL is the input leakage current per I/O pin over recommended operation conditions where –0.3V < VIN < VIL.

2: IIH is the input leakage current per I/O pin over recommended operating conditions VIH < VIN < VCCI. Input current is larger when operating outside recommended ranges.

3: Currents are measured at high temperature (100 °C junction temperature) and maximum voltage.

4: Currents are measured at 85 °C junction temperature.

5: Software default selection highlighted in gray.

TABLE 2-68: AC WAVEFORMS, MEASURING POINTS, AND CAPACITIVE LOADS

Input Low (V)	Input High (V)	Measuring Point* (V)	C_{LOAD} (pF)
0	1.8	0.9	35

Note: *Measuring point = Vtrip. See Table 2-22 for a complete table of trip points.

FIGURE 2-9: AC LOADING

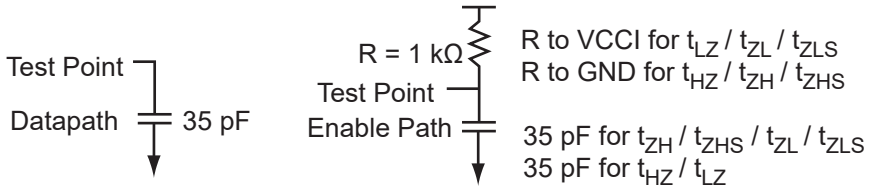

2.3.4.4.1 Timing Characteristics

TABLE 2-69: 1.8 V LVCMOS HIGH SLEW COMMERCIAL-CASE CONDITIONS: T_J = 70 °C, WORST-CASE VCC = 1.425V, WORST-CASE VCCI = 1.7V APPLICABLE TO ADVANCED I/O BANKS

Drive Strength	Speed Grade	t_{DOUT}	t_{DP}	t_{DIN}	t_{PY}	t_{EOUT}	t_{ZL}	t_{ZH}	t_{LZ}	t_{HZ}	t_{ZLS}	t_{ZHS}	Units
2 mA	Std.	0.66	11.86	0.04	1.22	0.43	9.14	11.86	2.77	1.66	11.37	14.10	ns
	–1	0.56	10.09	0.04	1.04	0.36	7.77	10.09	2.36	1.41	9.67	11.99	ns
	–2	0.49	8.86	0.03	0.91	0.32	6.82	8.86	2.07	1.24	8.49	10.53	ns
4 mA	Std.	0.66	6.91	0.04	1.22	0.43	5.86	6.91	3.22	2.84	8.10	9.15	ns
	–1	0.56	5.88	0.04	1.04	0.36	4.99	5.88	2.74	2.41	6.89	7.78	ns
	–2	0.49	5.16	0.03	0.91	0.32	4.38	5.16	2.41	2.12	6.05	6.83	ns
6 mA	Std.	0.66	4.45	0.04	1.22	0.43	4.18	4.45	3.53	3.38	6.42	6.68	ns
	–1	0.56	3.78	0.04	1.04	0.36	3.56	3.78	3.00	2.88	5.46	5.69	ns
	–2	0.49	3.32	0.03	0.91	0.32	3.12	3.32	2.64	2.53	4.79	4.99	ns
8 mA	Std.	0.66	3.92	0.04	1.22	0.43	3.93	3.92	3.60	3.52	6.16	6.16	ns
	–1	0.56	3.34	0.04	1.04	0.36	3.34	3.34	3.06	3.00	5.24	5.24	ns
	–2	0.49	2.93	0.03	0.91	0.32	2.93	2.93	2.69	2.63	4.60	4.60	ns
12 mA	Std.	0.66	3.53	0.04	1.22	0.43	3.60	3.04	3.70	4.08	5.84	5.28	ns
	–1	0.56	3.01	0.04	1.04	0.36	3.06	2.59	3.15	3.47	4.96	4.49	ns
	–2	0.49	2.64	0.03	0.91	0.32	2.69	2.27	2.76	3.05	4.36	3.94	ns
16 mA	Std.	0.66	3.53	0.04	1.22	0.43	3.60	3.04	3.70	4.08	5.84	5.28	ns
	–1	0.56	3.01	0.04	1.04	0.36	3.06	2.59	3.15	3.47	4.96	4.49	ns
	–2	0.49	2.64	0.03	0.91	0.32	2.69	2.27	2.76	3.05	4.36	3.94	ns

Note 1: Software default selection highlighted in gray.

2: For specific junction temperature and voltage supply levels, refer to Table 2-6 for derating values.

TABLE 2-70: 1.8V LVCMOS LOW SLEW COMMERCIAL-CASE CONDITIONS: T_J = 70 °C, WORST-CASE VCC = 1.425V, WORST-CASE VCCI = 1.7V APPLICABLE TO ADVANCED I/O BANKS

Drive Strength	Speed Grade	t_{DOUT}	t_{DP}	t_{DIN}	t_{PY}	t_{EOUT}	t_{ZL}	t_{ZH}	t_{LZ}	t_{HZ}	t_{ZLS}	t_{ZHS}	Units
2 mA	Std.	0.66	15.53	0.04	1.22	0.43	14.11	15.53	2.78	1.60	16.35	17.77	ns
	–1	0.56	13.21	0.04	1.04	0.36	12.01	13.21	2.36	1.36	13.91	15.11	ns
	–2	0.49	11.60	0.03	0.91	0.32	10.54	11.60	2.07	1.19	12.21	13.27	ns
4 mA	Std.	0.66	10.48	0.04	1.22	0.43	10.41	10.48	3.23	2.73	12.65	12.71	ns
	–1	0.56	8.91	0.04	1.04	0.36	8.86	8.91	2.75	2.33	10.76	10.81	ns
	–2	0.49	7.82	0.03	0.91	0.32	7.77	7.82	2.41	2.04	9.44	9.49	ns
6 mA	Std.	0.66	8.05	0.04	1.22	0.43	8.20	7.84	3.54	3.27	10.43	10.08	ns
	–1	0.56	6.85	0.04	1.04	0.36	6.97	6.67	3.01	2.78	8.88	8.57	ns

© 2023 Microchip Technology Inc. and its subsidiaries

TABLE 2-70: 1.8V LVCMOS LOW SLEW COMMERCIAL-CASE CONDITIONS: T_J = 70 °C, WORST-CASE VCC = 1.425V, WORST-CASE VCCI = 1.7V APPLICABLE TO ADVANCED I/O BANKS

Drive Strength	Speed Grade	t_{DOUT}	t_{DP}	t_{DIN}	t_{PY}	t_{EOUT}	t_{ZL}	t_{ZH}	t_{LZ}	t_{HZ}	t_{ZLS}	t_{ZHS}	Units
	–2	0.49	6.01	0.03	0.91	0.32	6.12	5.86	2.64	2.44	7.79	7.53	ns
8 mA	Std.	0.66	7.50	0.04	1.22	0.43	7.64	7.30	3.61	3.41	9.88	9.53	ns
	–1	0.56	6.38	0.04	1.04	0.36	6.50	6.21	3.07	2.90	8.40	8.11	ns
	–2	0.49	5.60	0.03	0.91	0.32	5.71	5.45	2.69	2.55	7.38	7.12	ns
12 mA	Std.	0.66	7.29	0.04	1.22	0.43	7.23	7.29	3.71	3.95	9.47	9.53	ns
	–1	0.56	6.20	0.04	1.04	0.36	6.15	6.20	3.15	3.36	8.06	8.11	ns
	–2	0.49	5.45	0.03	0.91	0.32	5.40	5.45	2.77	2.95	7.07	7.12	ns
16 mA	Std.	0.66	7.29	0.04	1.22	0.43	7.23	7.29	3.71	3.95	9.47	9.53	ns
	–1	0.56	6.20	0.04	1.04	0.36	6.15	6.20	3.15	3.36	8.06	8.11	ns
	–2	0.49	5.45	0.03	0.91	0.32	5.40	5.45	2.77	2.95	7.07	7.12	ns

Note: For specific junction temperature and voltage supply levels, refer to Table 2-6 for derating values.

TABLE 2-71: 1.8V LVCMOS HIGH SLEW COMMERCIAL-CASE CONDITIONS: T_J = 70 °C, WORST-CASE VCC = 1.425V, WORST-CASE VCCI = 1.7V APPLICABLE TO STANDARD PLUS I/O BANKS

Drive Strength	Speed Grade	t_{DOUT}	t_{DP}	t_{DIN}	t_{PY}	t_{EOUT}	t_{ZL}	t_{ZH}	t_{LZ}	t_{HZ}	t_{ZLS}	t_{ZHS}	Units
2 mA	Std.	0.66	11.33	0.04	1.20	0.43	8.72	11.33	2.24	1.52	10.96	13.57	ns
	–1	0.56	9.64	0.04	1.02	0.36	7.42	9.64	1.91	1.29	9.32	11.54	ns
	–2	0.49	8.46	0.03	0.90	0.32	6.51	8.46	1.68	1.14	8.18	10.13	ns
4 mA	Std.	0.66	6.48	0.04	1.20	0.43	5.48	6.48	2.65	2.60	7.72	8.72	ns
	–1	0.56	5.51	0.04	1.02	0.36	4.66	5.51	2.25	2.21	6.56	7.42	ns
	–2	0.49	4.84	0.03	0.90	0.32	4.09	4.84	1.98	1.94	5.76	6.51	ns
6 mA	Std.	0.66	4.06	0.04	1.20	0.43	3.84	4.06	2.93	3.10	6.07	6.30	ns
	–1	0.56	3.45	0.04	1.02	0.36	3.27	3.45	2.49	2.64	5.17	5.36	ns
	–2	0.49	3.03	0.03	0.90	0.32	2.87	3.03	2.19	2.32	4.54	4.70	ns
8 mA	Std.	0.66	4.06	0.04	1.20	0.43	3.84	4.06	2.93	3.10	6.07	6.30	ns
	–1	0.56	3.45	0.04	1.02	0.36	3.27	3.45	2.49	2.64	5.17	5.36	ns
	–2	0.49	3.03	0.03	0.90	0.32	2.87	3.03	2.19	2.32	4.54	4.70	ns

Note 1: Software default selection highlighted in gray.

2: For specific junction temperature and voltage supply levels, refer to Table 2-6 for derating values.

TABLE 2-72: 1.8V LVCMOS LOW SLEW COMMERCIAL-CASE CONDITIONS: T_J = 70 °C, WORST-CASE VCC = 1.425V, WORST-CASE VCCI = 1.7V APPLICABLE TO STANDARD PLUS I/O BANKS

Drive Strength	Speed Grade	t_{DOUT}	t_{DP}	t_{DIN}	t_{PY}	t_{EOUT}	t_{ZL}	t_{ZH}	t_{LZ}	t_{HZ}	t_{ZLS}	t_{ZHS}	Units
2 mA	Std.	0.66	14.80	0.04	1.20	0.43	13.49	14.80	2.25	1.46	15.73	17.04	ns
	–1	0.56	12.59	0.04	1.02	0.36	11.48	12.59	1.91	1.25	13.38	14.49	ns
	–2	0.49	11.05	0.03	0.90	0.32	10.08	11.05	1.68	1.09	11.75	12.72	ns
4 mA	Std.	0.66	9.90	0.04	1.20	0.43	9.73	9.90	2.65	2.50	11.97	12.13	ns
	–1	0.56	8.42	0.04	1.02	0.36	8.28	8.42	2.26	2.12	10.18	10.32	ns
	–2	0.49	7.39	0.03	0.90	0.32	7.27	7.39	1.98	1.86	8.94	9.06	ns
6 mA	Std.	0.66	7.44	0.04	1.20	0.43	7.58	7.32	2.94	2.99	9.81	9.56	ns
	–1	0.56	6.33	0.04	1.02	0.36	6.44	6.23	2.50	2.54	8.35	8.13	ns
	–2	0.49	5.55	0.03	0.90	0.32	5.66	5.47	2.19	2.23	7.33	7.14	ns
8 mA	Std.	0.66	7.44	0.04	1.20	0.43	7.58	7.32	2.94	2.99	9.81	9.56	ns
	–1	0.56	6.33	0.04	1.02	0.36	6.44	6.23	2.50	2.54	8.35	8.13	ns
	–2	0.49	5.55	0.03	0.90	0.32	5.66	5.47	2.19	2.23	7.33	7.14	ns

Note: For specific junction temperature and voltage supply levels, refer to Table 2-6 for derating values.

TABLE 2-73: 1.8V LVCMOS HIGH SLEW COMMERCIAL-CASE CONDITIONS: T_J = 70 °C, WORST-CASE VCC = 1.425V, WORST-CASE VCCI = 1.7V APPLICABLE TO STANDARD I/O BANKS

Drive Strength	Speed Grade	t_{DOUT}	t_{DP}	t_{DIN}	t_{PY}	t_{EOUT}	t_{ZL}	t_{ZH}	t_{LZ}	t_{HZ}	Units
2 mA	Std.	0.66	11.21	0.04	1.20	0.43	8.53	11.21	1.99	1.21	ns
	–1	0.56	9.54	0.04	1.02	0.36	7.26	9.54	1.69	1.03	ns
	–2	0.49	8.37	0.03	0.90	0.32	6.37	8.37	1.49	0.90	ns
4 mA	Std.	0.66	6.34	0.04	1.20	0.43	5.38	6.34	2.41	2.48	ns
	–1	0.56	5.40	0.04	1.02	0.36	4.58	5.40	2.05	2.11	ns
	–2	0.49	4.74	0.03	0.90	0.32	4.02	4.74	1.80	1.85	ns

Note 1: Software default selection highlighted in gray.

2: For specific junction temperature and voltage supply levels, refer to Table 2-6 for derating values.

TABLE 2-74: 1.8V LVCMOS LOW SLEW COMMERCIAL-CASE CONDITIONS: T_J = 70 °C, WORST-CASE VCC = 1.425V, WORST-CASE VCCI = 3.0V APPLICABLE TO STANDARD I/O BANKS

Drive Strength	Speed Grade	t_{DOUT}	t_{DP}	t_{DIN}	t_{PY}	t_{EOUT}	t_{ZL}	t_{ZH}	t_{LZ}	t_{HZ}	Units
2 mA	Std.	0.66	15.01	0.04	1.20	0.43	13.15	15.01	1.99	1.99	ns
	–1	0.56	12.77	0.04	1.02	0.36	11.19	12.77	1.70	1.70	ns
	–2	0.49	11.21	0.03	0.90	0.32	9.82	11.21	1.49	1.49	ns

Note: For specific junction temperature and voltage supply levels, refer to Table 2-6 for derating values.

© 2023 Microchip Technology Inc. and its subsidiaries

TABLE 2-74: 1.8V LVCMOS LOW SLEW COMMERCIAL-CASE CONDITIONS: T_J = 70 °C, WORST-CASE VCC = 1.425V, WORST-CASE VCCI = 3.0V APPLICABLE TO STANDARD I/O BANKS

Drive Strength	Speed Grade	t_{DOUT}	t_{DP}	t_{DIN}	t_{PY}	t_{EOUT}	t_{ZL}	t_{ZH}	t_{LZ}	t_{HZ}	Units
4 mA	Std.	0.66	10.10	0.04	1.20	0.43	9.55	10.10	2.41	2.37	ns
	–1	0.56	8.59	0.04	1.02	0.36	8.13	8.59	2.05	2.02	ns
	–2	0.49	7.54	0.03	0.90	0.32	7.13	7.54	1.80	1.77	ns

Note: For specific junction temperature and voltage supply levels, refer to Table 2-6 for derating values.

2.3.4.5 1.5V LVCMOS (JESD8-11)

Low-Voltage CMOS for 1.5V is an extension of the LVCMOS standard (JESD8-5) used for general-purpose 1.5V applications. It uses a 1.5V input buffer and a push-pull output buffer.

TABLE 2-75: MINIMUM AND MAXIMUM DC INPUT AND OUTPUT LEVELS APPLICABLE TO ADVANCED I/O BANKS

1.5 V LVCMOS	VIL		VIH		VOL	VOH	IOL	IOH	IOSL	IOSH	IIL 1	IIH 2
Drive Strength	Min. V	Max. V	Min. V	Max., V	Max. V	Min. V	mA	mA	Max. mA[3]	Max. mA[3]	µA 4	µA 4
2 mA	–0.3	0.35 * VCCI	0.65 * VCCI	1.575	0.25 * VCCI	0.75 * VCCI	2	2	16	13	10	10
4 mA	–0.3	0.35 * VCCI	0.65 * VCCI	1.575	0.25 * VCCI	0.75 * VCCI	4	4	33	25	10	10
6 mA	–0.3	0.35 * VCCI	0.65 * VCCI	1.575	0.25 * VCCI	0.75 * VCCI	6	6	39	32	10	10
8 mA	–0.3	0.35 * VCCI	0.65 * VCCI	1.575	0.25 * VCCI	0.75 * VCCI	8	8	55	66	10	10
12 mA	–0.3	0.35 * VCCI	0.65 * VCCI	1.575	0.25 * VCCI	0.75 * VCCI	12	12	55	66	10	10

Note 1: IIL is the input leakage current per I/O pin over recommended operation conditions where –0.3V < VIN < VIL.

2: IIH is the input leakage current per I/O pin over recommended operating conditions VIH < VIN < VCCI. Input current is larger when operating outside recommended ranges

3: Currents are measured at high temperature (100 °C junction temperature) and maximum voltage.

4: Currents are measured at 85 °C junction temperature.

5: Software default selection highlighted in gray.

TABLE 2-76: MINIMUM AND MAXIMUM DC INPUT AND OUTPUT LEVELS APPLICABLE TO STANDARD PLUS I/O BANKS

1.5 V LVCMOS	VIL		VIH		VOL	VOH	IOL	IOH	IOSL	IOSH	IIL[1]	IIH[2]
Drive Strength	Min. V	Max. V	Min. V	Max. V	Max. V	Min. V	mA	mA	Max. mA[3]	Max. mA[3]	µA[4]	µA[4]
2 mA	–0.3	0.35 * VCCI	0.65 * VCCI	1.575	0.25 * VCCI	0.75 * VCCI	2	2	16	13	10	10
4 mA	–0.3	0.35 * VCCI	0.65 * VCCI	1.575	0.25 * VCCI	0.75 * VCCI	4	4	33	25	10	10

Note 1: IIL is the input leakage current per I/O pin over recommended operation conditions where –0.3V < VIN < VIL.

2: IIH is the input leakage current per I/O pin over recommended operating conditions VIH < VIN < VCCI. Input current is larger when operating outside recommended ranges

3: Currents are measured at high temperature (100 °C junction temperature) and maximum voltage.

4: Currents are measured at 85 °C junction temperature.

5: Software default selection highlighted in gray.

TABLE 2-77: MINIMUM AND MAXIMUM DC INPUT AND OUTPUT LEVELS APPLICABLE TO STANDARD I/O BANKS

1.5 V LVCMOS	VIL		VIH		VOL	VOH	IOL	IOH	IOSL	IOSH	IIL[1]	IIH[2]
Drive Strength	Min. V	Max. V	Min. V	Max. V	Max. V	Min. V	mA	mA	Max. mA[3]	Max. mA[3]	µA[4]	µA[4]
2 mA	–0.3	0.35 * VCCI	0.65 * VCCI	3.6	0.25 * VCCI	0.75 * VCCI	2	2	13	16	10	10

Note 1: IIL is the input leakage current per I/O pin over recommended operation conditions where –0.3 V < VIN < VIL.

2: IIH is the input leakage current per I/O pin over recommended operating conditions VIH < VIN < VCCI. Input current is larger when operating outside recommended ranges.

3: Currents are measured at high temperature (100 °C junction temperature) and maximum voltage.

4: Currents are measured at 85 °C junction temperature.

5: Software default selection highlighted in gray.

TABLE 2-78: AC WAVEFORMS, MEASURING POINTS, AND CAPACITIVE LOADS

Input Low (V)	Input High (V)	Measuring Point* (V)	C_{LOAD} (pF)
0	1.5	0.75	35

Note: *Measuring point = $V_{trip.}$ See Table 2-22 for a complete table of trip points.

© 2023 Microchip Technology Inc. and its subsidiaries

FIGURE 2-10: AC LOADING

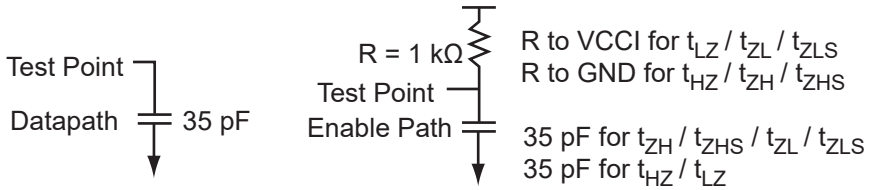

2.3.4.5.1 Timing Characteristics

TABLE 2-79: 1.5 V LVCMOS HIGH SLEW COMMERCIAL-CASE CONDITIONS: T_J = 70 °C, WORST-CASE VCC = 1.425 V, WORST-CASE VCCI = 1.4 V APPLICABLE TO ADVANCED I/O BANKS

Drive Strength	Speed Grade	t_{DOUT}	t_{DP}	t_{DIN}	t_{PY}	t_{EOUT}	t_{ZL}	t_{ZH}	t_{LZ}	t_{HZ}	t_{ZLS}	t_{ZHS}	Units
2 mA	Std.	0.66	8.36	0.04	1.44	0.43	6.82	8.36	3.39	2.77	9.06	10.60	ns
	–1	0.56	7.11	0.04	1.22	0.36	5.80	7.11	2.88	2.35	7.71	9.02	ns
	–2	0.49	6.24	0.03	1.07	0.32	5.10	6.24	2.53	2.06	6.76	7.91	ns
4 mA	Std.	0.66	5.31	0.04	1.44	0.43	4.85	5.31	3.74	3.40	7.09	7.55	ns
	–1	0.56	4.52	0.04	1.22	0.36	4.13	4.52	3.18	2.89	6.03	6.42	ns
	–2	0.49	3.97	0.03	1.07	0.32	3.62	3.97	2.79	2.54	5.29	5.64	ns
6 mA	Std.	0.66	4.67	0.04	1.44	0.43	4.55	4.67	3.82	3.56	6.78	6.90	ns
	–1	0.56	3.97	0.04	1.22	0.36	3.87	3.97	3.25	3.03	5.77	5.87	ns
	–2	0.49	3.49	0.03	1.07	0.32	3.40	3.49	2.85	2.66	5.07	5.16	ns
8 mA	Std.	0.66	4.08	0.04	1.44	0.43	4.15	3.58	3.94	4.20	6.39	5.81	ns
	–1	0.56	3.47	0.04	1.22	0.36	3.53	3.04	3.36	3.58	5.44	4.95	ns
	–2	0.49	3.05	0.03	1.07	0.32	3.10	2.67	2.95	3.14	4.77	4.34	ns
12 mA	Std.	0.66	4.08	0.04	1.44	0.43	4.15	3.58	3.94	4.20	6.39	5.81	ns
	–1	0.56	3.47	0.04	1.22	0.36	3.53	3.04	3.36	3.58	5.44	4.95	ns
	–2	0.49	3.05	0.03	1.07	0.32	3.10	2.67	2.95	3.14	4.77	4.34	ns

Note 1: Software default selection highlighted in gray.

2: For specific junction temperature and voltage supply levels, refer to Table 2-6 for derating values.

TABLE 2-80: 1.5V LVCMOS LOW SLEW COMMERCIAL-CASE CONDITIONS: T_J = 70 °C, WORST-CASE VCC = 1.425V, WORST-CASE VCCI = 1.4V APPLICABLE TO ADVANCED I/O BANKS

Drive Strength	Speed Grade	t_{DOUT}	t_{DP}	t_{DIN}	t_{PY}	t_{EOUT}	t_{ZL}	t_{ZH}	t_{LZ}	t_{HZ}	t_{ZLS}	t_{ZHS}	Units
2 mA	Std.	0.66	12.78	0.04	1.44	0.43	12.81	12.78	3.40	2.64	15.05	15.02	ns
	–1	0.56	10.87	0.04	1.22	0.36	10.90	10.87	2.89	2.25	12.80	12.78	ns
	–2	0.49	9.55	0.03	1.07	0.32	9.57	9.55	2.54	1.97	11.24	11.22	ns
4 mA	Std.	0.66	10.01	0.04	1.44	0.43	10.19	9.55	3.75	3.27	12.43	11.78	ns

TABLE 2-80: 1.5V LVCMOS LOW SLEW COMMERCIAL-CASE CONDITIONS: T_J = 70 °C, WORST-CASE VCC = 1.425V, WORST-CASE VCCI = 1.4V APPLICABLE TO ADVANCED I/O BANKS

Drive Strength	Speed Grade	t_{DOUT}	t_{DP}	t_{DIN}	t_{PY}	t_{EOUT}	t_{ZL}	t_{ZH}	t_{LZ}	t_{HZ}	t_{ZLS}	t_{ZHS}	Units
	–1	0.56	8.51	0.04	1.22	0.36	8.67	8.12	3.19	2.78	10.57	10.02	ns
	–2	0.49	7.47	0.03	1.07	0.32	7.61	7.13	2.80	2.44	9.28	8.80	ns
6 mA	Std.	0.66	9.33	0.04	1.44	0.43	9.51	8.89	3.83	3.43	11.74	11.13	ns
	–1	0.56	7.94	0.04	1.22	0.36	8.09	7.56	3.26	2.92	9.99	9.47	ns
	–2	0.49	6.97	0.03	1.07	0.32	7.10	6.64	2.86	2.56	8.77	8.31	ns
8 mA	Std.	0.66	8.91	0.04	1.44	0.43	9.07	8.89	3.95	4.05	11.31	11.13	ns
	–1	0.56	7.58	0.04	1.22	0.36	7.72	7.57	3.36	3.44	9.62	9.47	ns
	–2	0.49	6.65	0.03	1.07	0.32	6.78	6.64	2.95	3.02	8.45	8.31	ns
12 mA	Std.	0.66	8.91	0.04	1.44	0.43	9.07	8.89	3.95	4.05	11.31	11.13	ns
	–1	0.56	7.58	0.04	1.22	0.36	7.72	7.57	3.36	3.44	9.62	9.47	ns
	–2	0.49	6.65	0.03	1.07	0.32	6.78	6.64	2.95	3.02	8.45	8.31	ns

Note: For specific junction temperature and voltage supply levels, refer to Table 2-6 for derating values.

TABLE 2-81: 1.5V LVCMOS HIGH SLEW COMMERCIAL-CASE CONDITIONS: T_J = 70 °C, WORST-CASE VCC = 1.425V, WORST-CASE VCCI = 1.4V APPLICABLE TO STANDARD PLUS I/O BANKS

Drive Strength	Speed Grade	t_{DOUT}	t_{DP}	t_{DIN}	t_{PY}	t_{EOUT}	t_{ZL}	t_{ZH}	t_{LZ}	t_{HZ}	t_{ZLS}	t_{ZHS}	Units
2 mA	Std.	0.66	7.83	0.04	1.42	0.43	6.42	7.83	2.71	2.55	8.65	10.07	ns
	–1	0.56	6.66	0.04	1.21	0.36	5.46	6.66	2.31	2.17	7.36	8.56	ns
	–2	0.49	5.85	0.03	1.06	0.32	4.79	5.85	2.02	1.90	6.46	7.52	ns
4 mA	Std.	0.66	4.84	0.04	1.42	0.43	4.49	4.84	3.03	3.13	6.72	7.08	ns
	–1	0.56	4.12	0.04	1.21	0.36	3.82	4.12	2.58	2.66	5.72	6.02	ns
	–2	0.49	3.61	0.03	1.06	0.32	3.35	3.61	2.26	2.34	5.02	5.28	ns

Note 1: Software default selection highlighted in gray.

2: For specific junction temperature and voltage supply levels, refer to Table 2-6 for derating values.

TABLE 2-82: 1.5V LVCMOS LOW SLEW COMMERCIAL-CASE CONDITIONS: T_J = 70 °C, WORST-CASE VCC = 1.425V, WORST-CASE VCCI = 1.4V APPLICABLE TO STANDARD PLUS I/O BANKS

Drive Strength	Speed Grade	t_{DOUT}	t_{DP}	t_{DIN}	t_{PY}	t_{EOUT}	t_{ZL}	t_{ZH}	t_{LZ}	t_{HZ}	t_{ZLS}	t_{ZHS}	Units
2 mA	Std.	0.66	12.08	0.04	1.42	0.43	12.01	12.08	2.72	2.43	14.24	14.31	ns
	–1	0.56	10.27	0.04	1.21	0.36	10.21	10.27	2.31	2.06	12.12	12.18	ns
	–2	0.49	9.02	0.03	1.06	0.32	8.97	9.02	2.03	1.81	10.64	10.69	ns
4 mA	Std.	0.66	9.28	0.04	1.42	0.43	9.45	8.91	3.04	3.00	11.69	11.15	ns

© 2023 Microchip Technology Inc. and its subsidiaries

TABLE 2-82: 1.5V LVCMOS LOW SLEW COMMERCIAL-CASE CONDITIONS: T_J = 70 °C, WORST-CASE VCC = 1.425V, WORST-CASE VCCI = 1.4V APPLICABLE TO STANDARD PLUS I/O BANKS

Drive Strength	Speed Grade	t_{DOUT}	t_{DP}	t_{DIN}	t_{PY}	t_{EOUT}	t_{ZL}	t_{ZH}	t_{LZ}	t_{HZ}	t_{ZLS}	t_{ZHS}	Units
	–1	0.56	7.89	0.04	1.21	0.36	8.04	7.58	2.58	2.55	9.94	9.49	ns
	–2	0.49	6.93	0.03	1.06	0.32	7.06	6.66	2.27	2.24	8.73	8.33	ns

Note: For specific junction temperature and voltage supply levels, refer to Table 2-6 for derating values.

TABLE 2-83: 1.5V LVCMOS HIGH SLEW COMMERCIAL-CASE CONDITIONS: T_J = 70 °C, WORST-CASE VCC = 1.425V, WORST-CASE VCCI = 3.0V APPLICABLE TO STANDARD I/O BANKS

Drive Strength	Speed Grade	t_{DOUT}	t_{DP}	t_{DIN}	t_{PY}	t_{EOUT}	t_{ZL}	t_{ZH}	t_{LZ}	t_{HZ}	Units
2 mA	Std.	0.66	7.65	0.04	1.42	0.43	6.31	7.65	2.45	2.45	ns
	–1	0.56	6.50	0.04	1.21	0.36	5.37	6.50	2.08	2.08	ns
	–2	0.49	5.71	0.03	1.06	0.32	4.71	5.71	1.83	1.83	ns

Note 1: Software default selection highlighted in gray.
2: For specific junction temperature and voltage supply levels, refer to Table 2-6 for derating values.

TABLE 2-84: 1.5V LVCMOS LOW SLEW COMMERCIAL-CASE CONDITIONS: T_J = 70 °C, WORST-CASE VCC = 1.425V, WORST-CASE VCCI = 3.0V APPLICABLE TO STANDARD I/O BANKS

Drive Strength	Speed Grade	t_{DOUT}	t_{DP}	t_{DIN}	t_{PY}	t_{EOUT}	t_{ZL}	t_{ZH}	t_{LZ}	t_{HZ}	Units
2 mA	Std.	0.66	12.33	0.04	1.42	0.43	11.79	12.33	2.45	2.32	ns
	–1	0.56	10.49	0.04	1.21	0.36	10.03	10.49	2.08	1.98	ns
	–2	0.49	9.21	0.03	1.06	0.32	8.81	9.21	1.83	1.73	ns

Note: For specific junction temperature and voltage supply levels, refer to Table 2-6 for derating values.

2.3.4.6 3.3V PCI, 3.3V PCI-X

Peripheral Component Interface for 3.3V standard specifies support for 33 MHz and 66 MHz PCI Bus applications.

TABLE 2-85: MINIMUM AND MAXIMUM DC INPUT AND OUTPUT LEVELS

3.3 V PCI/PCI-X	VIL		VIH		VOL	VOH	IOL	IOH	IOSL	IOSH	IIL	IIH
Drive Strength	Min. V	Max. V	Min. V	Max. V	Max,. V	Min. V	mA	mA	Max. mA[1]	Max. mA[1]	µA[2]	µA[2]
Per PCI specification	Per PCI curves										10	10

Note 1: Currents are measured at high temperature (100 °C junction temperature) and maximum voltage.
2: Currents are measured at 85 °C junction temperature.

AC loadings are defined per the PCI/PCI-X specifications for the datapath; Microchip loadings for enable path characterization are described in Figure 2-11.

FIGURE 2-11: AC LOADING

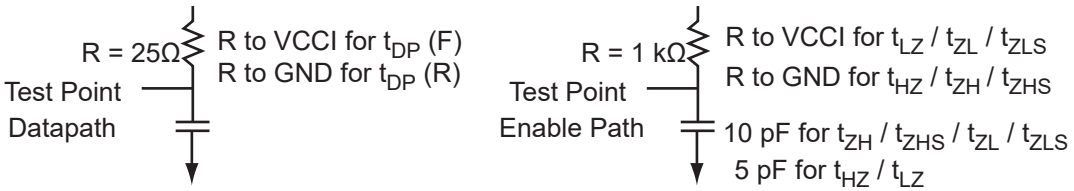

AC loadings are defined per PCI/PCI-X specifications for the datapath; Microchip loading for tristate is described in Table 2-86.

TABLE 2-86: AC WAVEFORMS, MEASURING POINTS, AND CAPACITIVE LOADS

Input Low (V)	Input High (V)	Measuring Point* (V)	C_{LOAD} (pF)
0	3.3	0.285 * VCCI for $t_{DP(R)}$ 0.615 * VCCI for $t_{DP(F)}$	10

Note: *Measuring point = $V_{trip.}$ See Table 2-22 for a complete table of trip points.

2.3.4.6.1 Timing Characteristics

TABLE 2-87: 3.3V PCI/PCI-X COMMERCIAL-CASE CONDITIONS: T_J = 70 °C, WORST-CASE VCC = 1.425V, WORST-CASE VCCI = 3.0V APPLICABLE TO ADVANCED I/O BANKS

Speed Grade	t_{DOUT}	t_{DP}	t_{DIN}	t_{PY}	t_{EOUT}	t_{ZL}	t_{ZH}	t_{LZ}	t_{HZ}	t_{ZLS}	t_{ZHS}	Units
Std.	0.66	2.68	0.04	0.86	0.43	2.73	1.95	3.21	3.58	4.97	4.19	ns
–1	0.56	2.28	0.04	0.73	0.36	2.32	1.66	2.73	3.05	4.22	3.56	ns
–2	0.49	2.00	0.03	0.65	0.32	2.04	1.46	2.40	2.68	3.71	3.13	ns

Note: For specific junction temperature and voltage supply levels, refer to Table 2-6 for derating values.

TABLE 2-88: 3.3V PCI/PCI-X COMMERCIAL-CASE CONDITIONS: T_J = 70 °C, WORST-CASE VCC = 1.425V, WORST-CASE VCCI = 3.0V APPLICABLE TO STANDARD PLUS I/O BANKS

Speed Grade	t_{DOUT}	t_{DP}	t_{DIN}	t_{PY}	t_{EOUT}	t_{ZL}	t_{ZH}	t_{LZ}	t_{HZ}	t_{ZLS}	t_{ZHS}	Units
Std.	0.66	2.31	0.04	0.85	0.43	2.35	1.70	2.79	3.22	4.59	3.94	ns
–1	0.56	1.96	0.04	0.72	0.36	2.00	1.45	2.37	2.74	3.90	3.35	ns
–2	0.49	1.72	0.03	0.64	0.32	1.76	1.27	2.08	2.41	3.42	2.94	ns

Note: For specific junction temperature and voltage supply levels, refer to Table 2-6 for derating values.

2.3.5 DIFFERENTIAL I/O CHARACTERISTICS

2.3.5.1 Physical Implementation

Configuration of the I/O modules as a differential pair is handled by Microchip Designer software when the user instantiates a differential I/O macro in the design.

Differential I/Os can also be used in conjunction with the embedded Input Register (InReg), Output Register (OutReg), Enable Register (EnReg), and Double Data Rate (DDR). However, there is no support for bidirectional I/Os or tristates with the LVPECL standards.

© 2023 Microchip Technology Inc. and its subsidiaries

2.3.5.2 LVDS

Low-Voltage Differential Signaling (ANSI/TIA/EIA-644) is a high-speed, differential I/O standard. It requires that one data bit be carried through two signal lines, so two pins are needed. It also requires external resistor termination.

The full implementation of the LVDS transmitter and receiver is shown in an example in Figure 2-12. The building blocks of the LVDS transmitter-receiver are one transmitter macro, one receiver macro, three board resistors at the transmitter end, and one resistor at the receiver end. The values for the three driver resistors are different from those used in the LVPECL implementation because the output standard specifications are different.

Along with LVDS I/O, ProASIC 3 also supports Bus LVDS structure and Multipoint LVDS (M-LVDS) configuration (up to 40 nodes).

TABLE 2-89: LVDS MINIMUM AND MAXIMUM DC INPUT AND OUTPUT LEVELS

DC Parameter	Description	Min.	Typ.	Max.	Units
VCCI	Supply Voltage	2.375	2.5	2.625	V
VOL	Output Low Voltage	0.9	1.075	1.25	V
VOH	Output High Voltage	1.25	1.425	1.6	V
IOL [1]	Output Lower Current	0.65	0.91	1.16	mA
IOH [1]	Output High Current	0.65	0.91	1.16	mA
VI	Input Voltage	0		2.925	V
IIH [2,3]	Input High Leakage Current	—	—	10	µA
IIL [2,4]	Input Low Leakage Current	—	—	10	µA
VODIFF	Differential Output Voltage	250	350	450	mV
VOCM	Output Common Mode Voltage	1.125	1.25	1.375	V
VICM	Input Common Mode Voltage	0.05	1.25	2.35	V
VIDIFF	Input Differential Voltage	100	350		mV

Note 1: IOL/IOH defined by VODIFF/(Resistor Network)

2: Currents are measured at 85 °C junction temperature.

3: IIH is the input leakage current per I/O pin over recommended operating conditions VIH < VIN <VCCI. Input current is larger when operating outside recommended ranges.

4: IIL is the input leakage current per I/O pin over recommended operation conditions where -0.3 V < VIN <VIL.

TABLE 2-90: AC WAVEFORMS, MEASURING POINTS, AND CAPACITIVE LOADS

Input Low (V)	Input High (V)	Measuring Point* (V)
1.075	1.325	Cross point

Note: *Measuring point = $V_{trip.}$ See Table 2-22 for a complete table of trip points.

FIGURE 2-12: LVDS CIRCUIT DIAGRAM AND BOARD-LEVEL IMPLEMENTATION

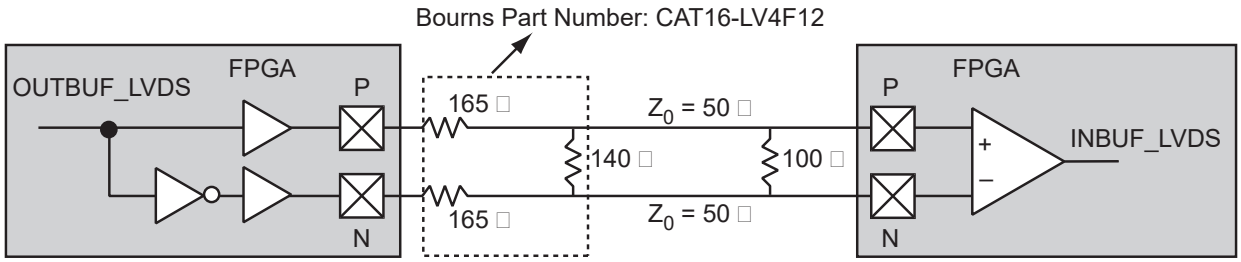

2.3.5.2.1 Timing Characteristics

TABLE 2-91: LVDS COMMERCIAL-CASE CONDITIONS: T_J = 70 °C, WORST-CASE VCC = 1.425 V, WORST-CASE VCCI = 2.3 V

Speed Grade	t_{DOUT}	t_{DP}	t_{DIN}	t_{PY}	Units
Std.	0.66	1.83	0.04	1.60	ns
–1	0.56	1.56	0.04	1.36	ns
–2	0.49	1.37	0.03	1.20	ns

Note: For specific junction temperature and voltage supply levels, refer to Table 2-6 for derating values.

2.3.5.3 B-LVDS/M-LVDS

Bus LVDS (B-LVDS) and Multipoint LVDS (M-LVDS) specifications extend the existing LVDS standard to high-performance multipoint bus applications. Multidrop and multipoint bus configurations may contain any combination of drivers, receivers, and transceivers. Microchip LVDS drivers provide the higher drive current required by B-LVDS and M-LVDS to accommodate the loading. The drivers require series terminations for better signal quality and to control voltage swing. Termination is also required at both ends of the bus since the driver can be located anywhere on the bus. These configurations can be implemented using the TRIBUF_LVDS and BIBUF_LVDS macros along with appropriate terminations. Multipoint designs using Microchip LVDS macros can achieve up to 200 MHz with a maximum of 20 loads. A sample application is given in Figure 2-13. The input and output buffer delays are available in the LVDS section in Table 2-91.

Example: For a bus consisting of 20 equidistant loads, the following terminations provide the required differential voltage, in worst-case Industrial operating conditions, at the farthest receiver: R_S = 60 Ω and R_T = 70 Ω, given Z_0 = 50 Ω (2") and Z_{stub} = 50 Ω (~1.5").

FIGURE 2-13: B-LVDS/M-LVDS MULTIPOINT APPLICATION USING LVDS I/O BUFFERS

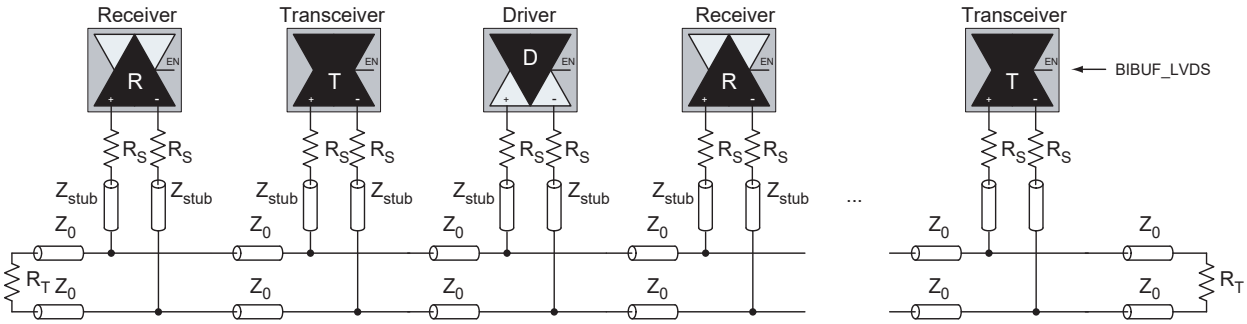

2.3.5.4 LVPECL

Low-Voltage Positive Emitter-Coupled Logic (LVPECL) is another differential I/O standard. It requires that one data bit be carried through two signal lines. Like LVDS, two pins are needed. It also requires external resistor termination.

© 2023 Microchip Technology Inc. and its subsidiaries

The full implementation of the LVDS transmitter and receiver is shown in an example in Figure 2-14. The building blocks of the LVPECL transmitter-receiver are one transmitter macro, one receiver macro, three board resistors at the transmitter end, and one resistor at the receiver end. The values for the three driver resistors are different from those used in the LVDS implementation because the output standard specifications are different.

FIGURE 2-14: LVPECL CIRCUIT DIAGRAM AND BOARD-LEVEL IMPLEMENTATION

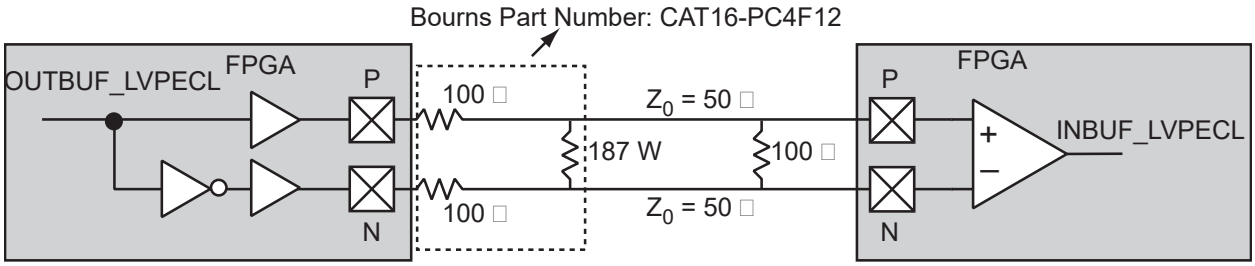

TABLE 2-92: MINIMUM AND MAXIMUM DC INPUT AND OUTPUT LEVELS

DC Parameter	Description	Min.	Max.	Min.	Max.	Min.	Max.	Units
VCCI	Supply Voltage	3.0		3.3		3.6		V
VOL	Output Low Voltage	0.96	1.27	1.06	1.43	1.30	1.57	V
VOH	Output High Voltage	1.8	2.11	1.92	2.28	2.13	2.41	V
VIL, VIH	Input Low, Input High Voltages	0	3.6	0	3.6	0	3.6	V
VODIFF	Differential Output Voltage	0.625	0.97	0.625	0.97	0.625	0.97	V
VOCM	Output Common-Mode Voltage	1.762	1.98	1.762	1.98	1.762	1.98	V
VICM	Input Common-Mode Voltage	1.01	2.57	1.01	2.57	1.01	2.57	V
VIDIFF	Input Differential Voltage	300	—	300	—	300	—	mV

TABLE 2-93: AC WAVEFORMS, MEASURING POINTS, AND CAPACITIVE LOADS

Input Low (V)	Input High (V)	Measuring Point* (V)
1.64	1.94	Cross point

Note: *Measuring point = $V_{trip.}$ See Table 2-22 for a complete table of trip points.

2.3.5.4.1 Timing Characteristics

TABLE 2-94: LVPECL COMMERCIAL-CASE CONDITIONS: T_J = 70 °C, WORST-CASE VCC = 1.425 V, WORST-CASE VCCI = 3.0 V

Speed Grade	t_{DOUT}	t_{DP}	t_{DIN}	t_{PY}	Units
Std.	0.66	1.80	0.04	1.40	ns
–1	0.56	1.53	0.04	1.19	ns
–2	0.49	1.34	0.03	1.05	ns

Note: For specific junction temperature and voltage supply levels, refer to Table 2-6 for derating values.

2.3.6 I/O REGISTER SPECIFICATIONS

2.3.6.1 Fully Registered I/O Buffers with Synchronous Enable and Asynchronous Preset

TABLE 2-95: PARAMETER DEFINITION AND MEASURING NODES

Parameter Name	Parameter Definition	Measuring Nodes (from, to)*
t_{OCLKQ}	Clock-to-Q of the Output Data Register	H, DOUT
t_{OSUD}	Data Setup Time for the Output Data Register	F, H
t_{OHD}	Data Hold Time for the Output Data Register	F, H
t_{OSUE}	Enable Setup Time for the Output Data Register	G, H
t_{OHE}	Enable Hold Time for the Output Data Register	G, H
t_{OPRE2Q}	Asynchronous Preset-to-Q of the Output Data Register	L, DOUT
$t_{OREMPRE}$	Asynchronous Preset Removal Time for the Output Data Register	L, H
$t_{ORECPRE}$	Asynchronous Preset Recovery Time for the Output Data Register	L, H
t_{OECLKQ}	Clock-to-Q of the Output Enable Register	H, EOUT
t_{OESUD}	Data Setup Time for the Output Enable Register	J, H
t_{OEHD}	Data Hold Time for the Output Enable Register	J, H
t_{OESUE}	Enable Setup Time for the Output Enable Register	K, H
t_{OEHE}	Enable Hold Time for the Output Enable Register	K, H
$t_{OEPRE2Q}$	Asynchronous Preset-to-Q of the Output Enable Register	I, EOUT
$t_{OEREMPRE}$	Asynchronous Preset Removal Time for the Output Enable Register	I, H
$t_{OERECPRE}$	Asynchronous Preset Recovery Time for the Output Enable Register	I, H
t_{ICLKQ}	Clock-to-Q of the Input Data Register	A, E
t_{ISUD}	Data Setup Time for the Input Data Register	C, A
t_{IHD}	Data Hold Time for the Input Data Register	C, A
t_{ISUE}	Enable Setup Time for the Input Data Register	B, A
t_{IHE}	Enable Hold Time for the Input Data Register	B, A
t_{IPRE2Q}	Asynchronous Preset-to-Q of the Input Data Register	D, E
$t_{IREMPRE}$	Asynchronous Preset Removal Time for the Input Data Register	D, A
$t_{IRECPRE}$	Asynchronous Preset Recovery Time for the Input Data Register	D, A

Note: *See Figure 2-15 for more information.

© 2023 Microchip Technology Inc. and its subsidiaries

FIGURE 2-15: TIMING MODEL OF REGISTERED I/O BUFFERS WITH SYNCHRONOUS ENABLE AND ASYNCHRONOUS PRESET

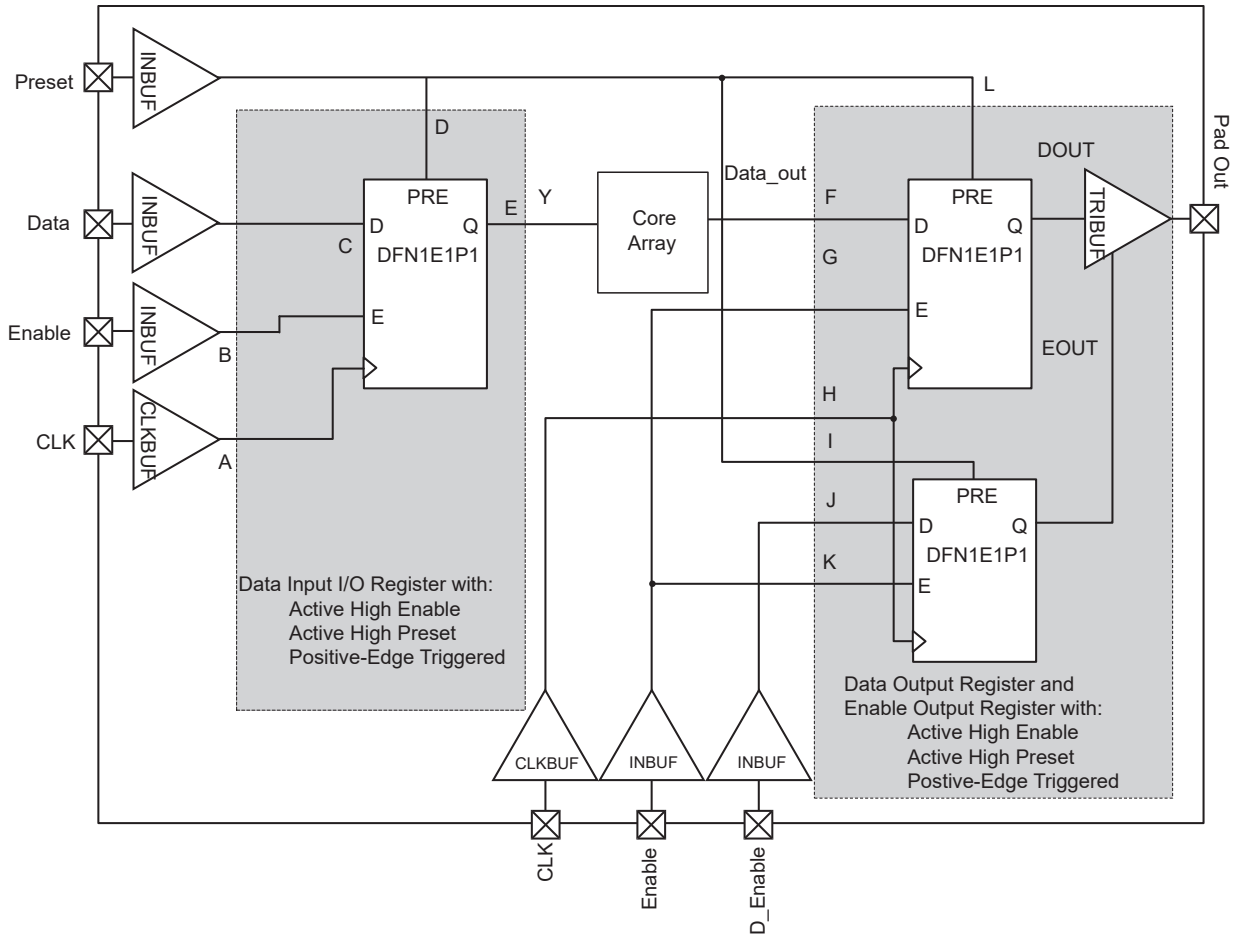

2.3.6.2 Fully Registered I/O Buffers with Synchronous Enable and Asynchronous Clear

TABLE 2-96: PARAMETER DEFINITION AND MEASURING NODES

Parameter Name	Parameter Definition	Measuring Nodes (from, to)*
t_{OCLKQ}	Clock-to-Q of the Output Data Register	HH, DOUT
t_{OSUD}	Data Setup Time for the Output Data Register	FF, HH
t_{OHD}	Data Hold Time for the Output Data Register	FF, HH
t_{OSUE}	Enable Setup Time for the Output Data Register	GG, HH
t_{OHE}	Enable Hold Time for the Output Data Register	GG, HH
t_{OCLR2Q}	Asynchronous Clear-to-Q of the Output Data Register	LL, DOUT
$t_{OREMCLR}$	Asynchronous Clear Removal Time for the Output Data Register	LL, HH
$t_{ORECCLR}$	Asynchronous Clear Recovery Time for the Output Data Register	LL, HH
t_{OECLKQ}	Clock-to-Q of the Output Enable Register	HH, EOUT
t_{OESUD}	Data Setup Time for the Output Enable Register	JJ, HH
t_{OEHD}	Data Hold Time for the Output Enable Register	JJ, HH

TABLE 2-96: PARAMETER DEFINITION AND MEASURING NODES

Parameter Name	Parameter Definition	Measuring Nodes (from, to)*
t_{OESUE}	Enable Setup Time for the Output Enable Register	KK, HH
t_{OEHE}	Enable Hold Time for the Output Enable Register	KK, HH
$t_{OECLR2Q}$	Asynchronous Clear-to-Q of the Output Enable Register	II, EOUT
$t_{OEREMCLR}$	Asynchronous Clear Removal Time for the Output Enable Register	II, HH
$t_{OERECCLR}$	Asynchronous Clear Recovery Time for the Output Enable Register	II, HH
t_{ICLKQ}	Clock-to-Q of the Input Data Register	AA, EE
t_{ISUD}	Data Setup Time for the Input Data Register	CC, AA
t_{IHD}	Data Hold Time for the Input Data Register	CC, AA
t_{ISUE}	Enable Setup Time for the Input Data Register	BB, AA
t_{IHE}	Enable Hold Time for the Input Data Register	BB, AA
t_{ICLR2Q}	Asynchronous Clear-to-Q of the Input Data Register	DD, EE
$t_{IREMCLR}$	Asynchronous Clear Removal Time for the Input Data Register	DD, AA
$t_{IRECCLR}$	Asynchronous Clear Recovery Time for the Input Data Register	DD, AA

Note: *See Figure 2-16 for more information.

© 2023 Microchip Technology Inc. and its subsidiaries

FIGURE 2-16: TIMING MODEL OF THE REGISTERED I/O BUFFERS WITH SYNCHRONOUS ENABLE AND ASYNCHRONOUS CLEAR

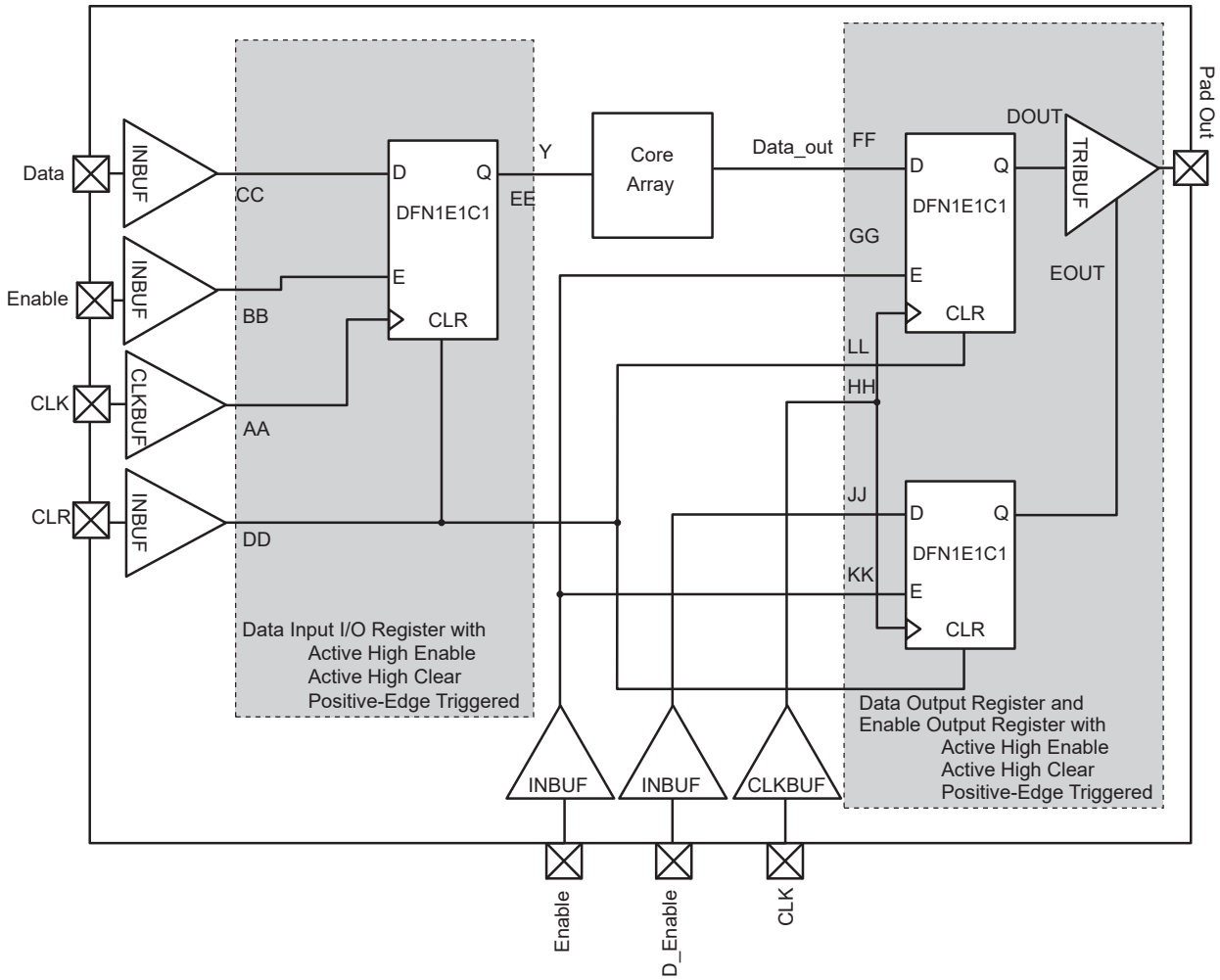

2.3.6.3 Input Register

FIGURE 2-17: INPUT REGISTER TIMING DIAGRAM

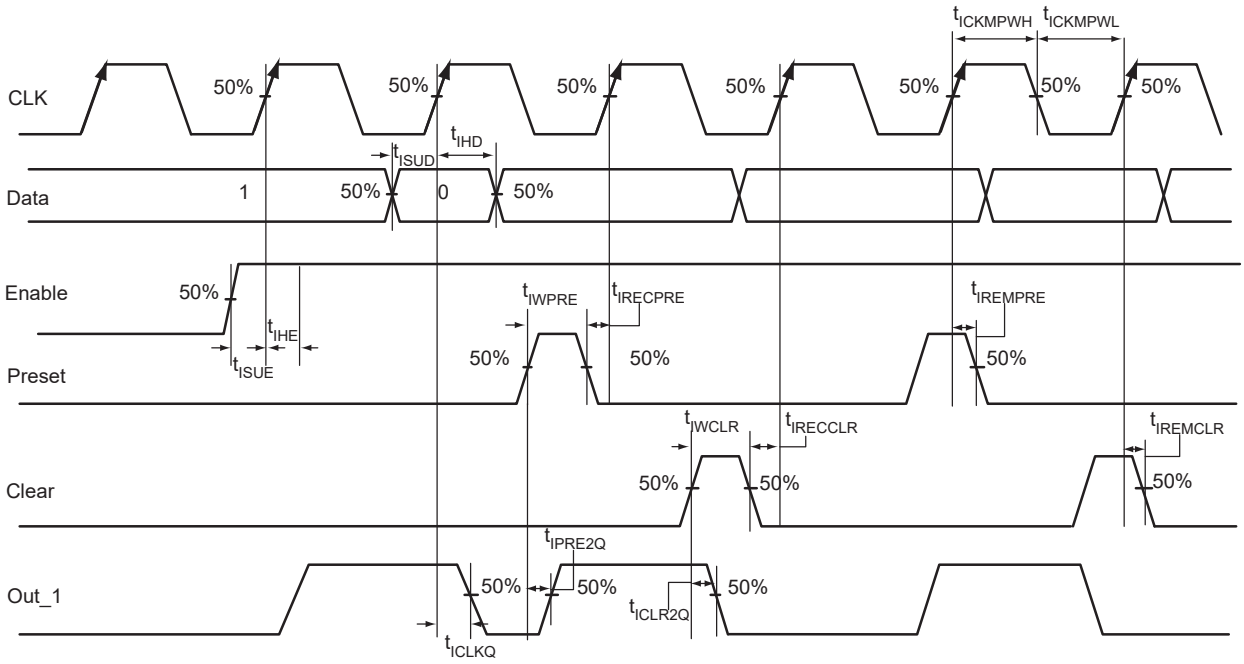

2.3.6.3.1 Timing Characteristics

TABLE 2-97: INPUT DATA REGISTER PROPAGATION DELAYS COMMERCIAL-CASE CONDITIONS: T_J = 70 °C, WORST-CASE VCC = 1.425 V

Parameter	Description	–2	–1	Std.	Units
t_{ICLKQ}	Clock-to-Q of the Input Data Register	0.24	0.27	0.32	ns
t_{ISUD}	Data Setup Time for the Input Data Register	0.26	0.30	0.35	ns
t_{IHD}	Data Hold Time for the Input Data Register	0.00	0.00	0.00	ns
t_{ISUE}	Enable Setup Time for the Input Data Register	0.37	0.42	0.50	ns
t_{IHE}	Enable Hold Time for the Input Data Register	0.00	0.00	0.00	ns
t_{ICLR2Q}	Asynchronous Clear-to-Q of the Input Data Register	0.45	0.52	0.61	ns
t_{IPRE2Q}	Asynchronous Preset-to-Q of the Input Data Register	0.45	0.52	0.61	ns
$t_{IREMCLR}$	Asynchronous Clear Removal Time for the Input Data Register	0.00	0.00	0.00	ns
$t_{IRECCLR}$	Asynchronous Clear Recovery Time for the Input Data Register	0.22	0.25	0.30	ns
$t_{IREMPRE}$	Asynchronous Preset Removal Time for the Input Data Register	0.00	0.00	0.00	ns
$t_{IRECPRE}$	Asynchronous Preset Recovery Time for the Input Data Register	0.22	0.25	0.30	ns
t_{IWCLR}	Asynchronous Clear Minimum Pulse Width for the Input Data Register	0.22	0.25	0.30	ns
t_{IWPRE}	Asynchronous Preset Minimum Pulse Width for the Input Data Register	0.22	0.25	0.30	ns
$t_{ICKMPWH}$	Clock Minimum Pulse Width High for the Input Data Register	0.36	0.41	0.48	ns
$t_{ICKMPWL}$	Clock Minimum Pulse Width Low for the Input Data Register	0.32	0.37	0.43	ns

Note: For specific junction temperature and voltage supply levels, refer to Table 2-6 for derating values.

© 2023 Microchip Technology Inc. and its subsidiaries

2.3.6.4 Output Register

FIGURE 2-18: OUTPUT REGISTER TIMING DIAGRAM

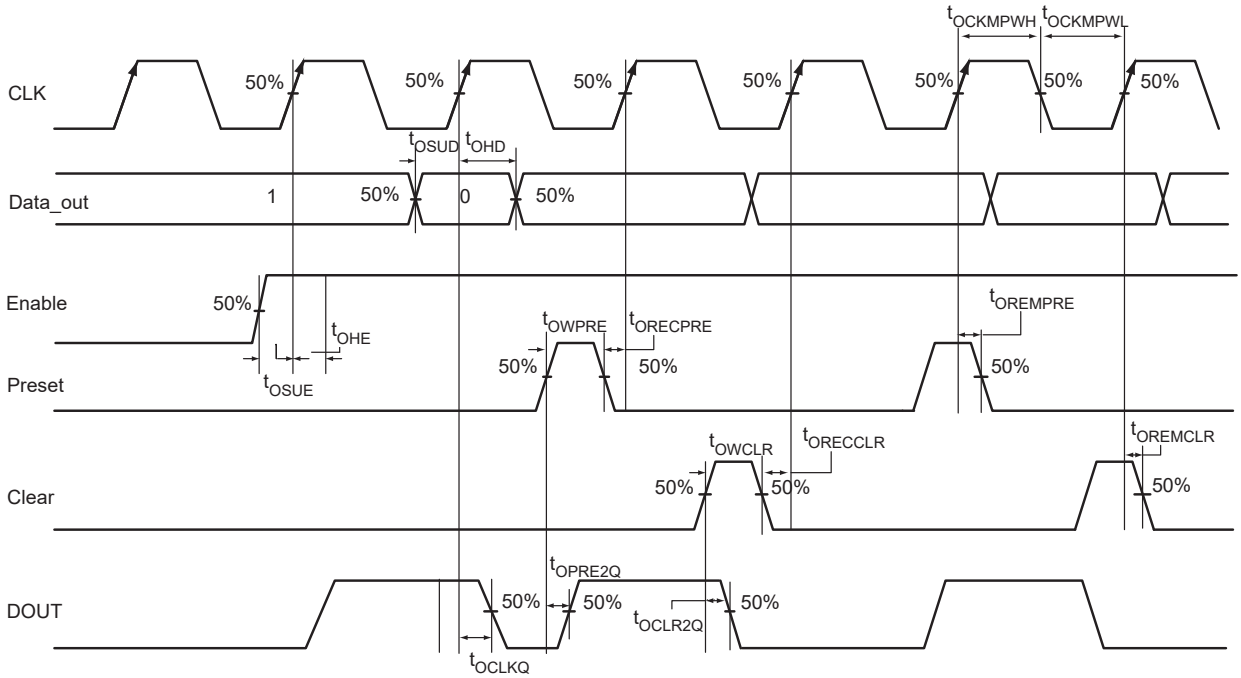

2.3.6.4.1 Timing Characteristics

TABLE 2-98: OUTPUT DATA REGISTER PROPAGATION DELAYS COMMERCIAL-CASE CONDITIONS: T_J = 70 °C, WORST-CASE VCC = 1.425V

Parameter	Description	–2	–1	Std.	Units
t_{OCLKQ}	Clock-to-Q of the Output Data Register	0.59	0.67	0.79	ns
t_{OSUD}	Data Setup Time for the Output Data Register	0.31	0.36	0.42	ns
t_{OHD}	Data Hold Time for the Output Data Register	0.00	0.00	0.00	ns
t_{OSUE}	Enable Setup Time for the Output Data Register	0.44	0.50	0.59	ns
t_{OHE}	Enable Hold Time for the Output Data Register	0.00	0.00	0.00	ns
t_{OCLR2Q}	Asynchronous Clear-to-Q of the Output Data Register	0.80	0.91	1.07	ns
t_{OPRE2Q}	Asynchronous Preset-to-Q of the Output Data Register	0.80	0.91	1.07	ns
$t_{OREMCLR}$	Asynchronous Clear Removal Time for the Output Data Register	0.00	0.00	0.00	ns
$t_{ORECCLR}$	Asynchronous Clear Recovery Time for the Output Data Register	0.22	0.25	0.30	ns
$t_{OREMPRE}$	Asynchronous Preset Removal Time for the Output Data Register	0.00	0.00	0.00	ns
$t_{ORECPRE}$	Asynchronous Preset Recovery Time for the Output Data Register	0.22	0.25	0.30	ns
t_{OWCLR}	Asynchronous Clear Minimum Pulse Width for the Output Data Register	0.22	0.25	0.30	ns
t_{OWPRE}	Asynchronous Preset Minimum Pulse Width for the Output Data Register	0.22	0.25	0.30	ns
$t_{OCKMPWH}$	Clock Minimum Pulse Width High for the Output Data Register	0.36	0.41	0.48	ns
$t_{OCKMPWL}$	Clock Minimum Pulse Width Low for the Output Data Register	0.32	0.37	0.43	ns

Note: For specific junction temperature and voltage supply levels, refer to Table 2-6 for derating values.

2.3.6.5 Output Enable Register

FIGURE 2-19: OUTPUT ENABLE REGISTER TIMING DIAGRAM

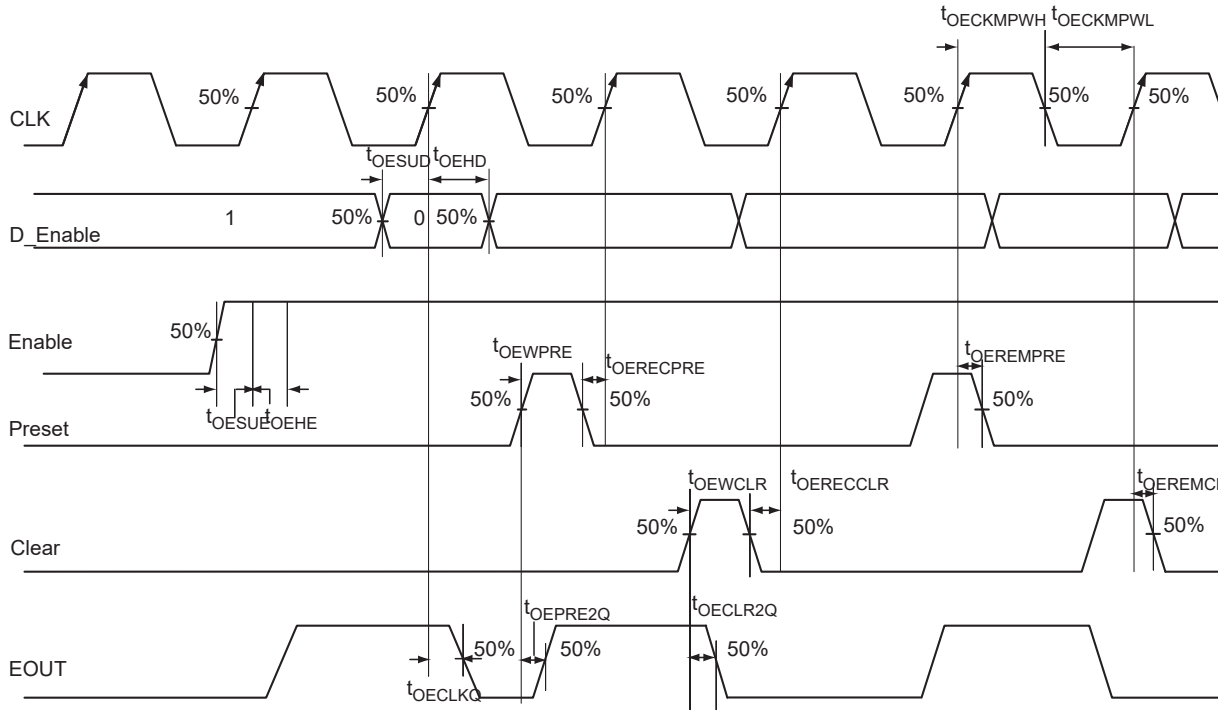

© 2023 Microchip Technology Inc. and its subsidiaries

2.3.6.5.1 Timing Characteristics

TABLE 2-99: OUTPUT ENABLE REGISTER PROPAGATION DELAYS COMMERCIAL-CASE CONDITIONS: T_J = 70 °C, WORST-CASE VCC = 1.425V

Parameter	Description	–2	–1	Std.	Units
t_{OECLKQ}	Clock-to-Q of the Output Enable Register	0.59	0.67	0.79	ns
t_{OESUD}	Data Setup Time for the Output Enable Register	0.31	0.36	0.42	ns
t_{OEHD}	Data Hold Time for the Output Enable Register	0.00	0.00	0.00	ns
t_{OESUE}	Enable Setup Time for the Output Enable Register	0.44	0.50	0.58	ns
t_{OEHE}	Enable Hold Time for the Output Enable Register	0.00	0.00	0.00	ns
$t_{OECLR2Q}$	Asynchronous Clear-to-Q of the Output Enable Register	0.67	0.76	0.89	ns
$t_{OEPRE2Q}$	Asynchronous Preset-to-Q of the Output Enable Register	0.67	0.76	0.89	ns
$t_{OEREMCLR}$	Asynchronous Clear Removal Time for the Output Enable Register	0.00	0.00	0.00	ns
$t_{OERECCLR}$	Asynchronous Clear Recovery Time for the Output Enable Register	0.22	0.25	0.30	ns
$t_{OEREMPRE}$	Asynchronous Preset Removal Time for the Output Enable Register	0.00	0.00	0.00	ns
$t_{OERECPRE}$	Asynchronous Preset Recovery Time for the Output Enable Register	0.22	0.25	0.30	ns
t_{OEWCLR}	Asynchronous Clear Minimum Pulse Width for the Output Enable Register	0.22	0.25	0.30	ns
t_{OEWPRE}	Asynchronous Preset Minimum Pulse Width for the Output Enable Register	0.22	0.25	0.30	ns
$t_{OECKMPWH}$	Clock Minimum Pulse Width High for the Output Enable Register	0.36	0.41	0.48	ns
$t_{OECKMPWL}$	Clock Minimum Pulse Width Low for the Output Enable Register	0.32	0.37	0.43	ns

Note: For specific junction temperature and voltage supply levels, refer to Table 2-6 for derating values.

2.3.7 DDR MODULE SPECIFICATIONS

2.3.7.1 Input DDR Module

TABLE 2-100: PARAMETER DEFINITIONS

Parameter Name	Parameter Definition	Measuring Nodes (from, to)
$t_{DDRICLKQ1}$	Clock-to-Out Out_QR	B, D
$t_{DDRICLKQ2}$	Clock-to-Out Out_QF	B, E
$t_{DDRISUD}$	Data Setup Time of DDR input	A, B
t_{DDRIHD}	Data Hold Time of DDR input	A, B
$t_{DDRICLR2Q1}$	Clear-to-Out Out_QR	C, D
$t_{DDRICLR2Q2}$	Clear-to-Out Out_QF	C, E
$t_{DDRIREMCLR}$	Clear Removal	C, B
$t_{DDRIRECCLR}$	Clear Recovery	C, B

FIGURE 2-20: INPUT DDR TIMING MODEL

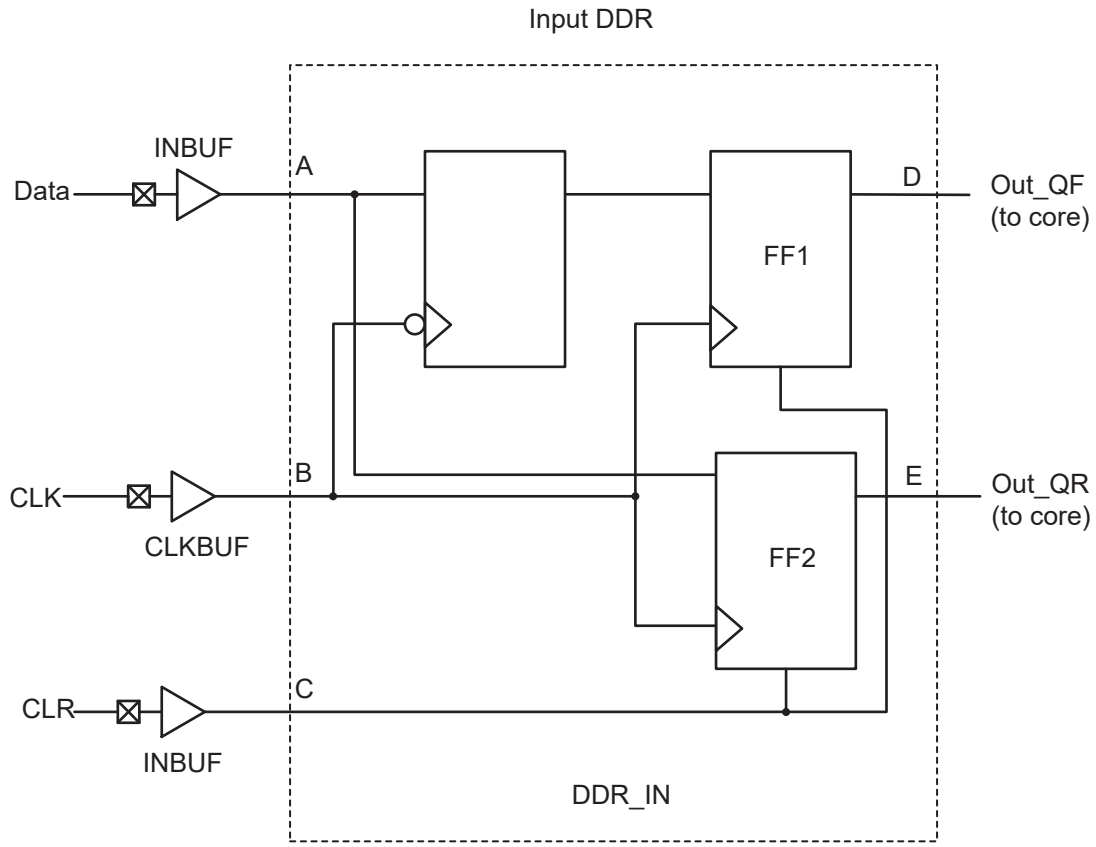

FIGURE 2-21: INPUT DDR TIMING DIAGRAM

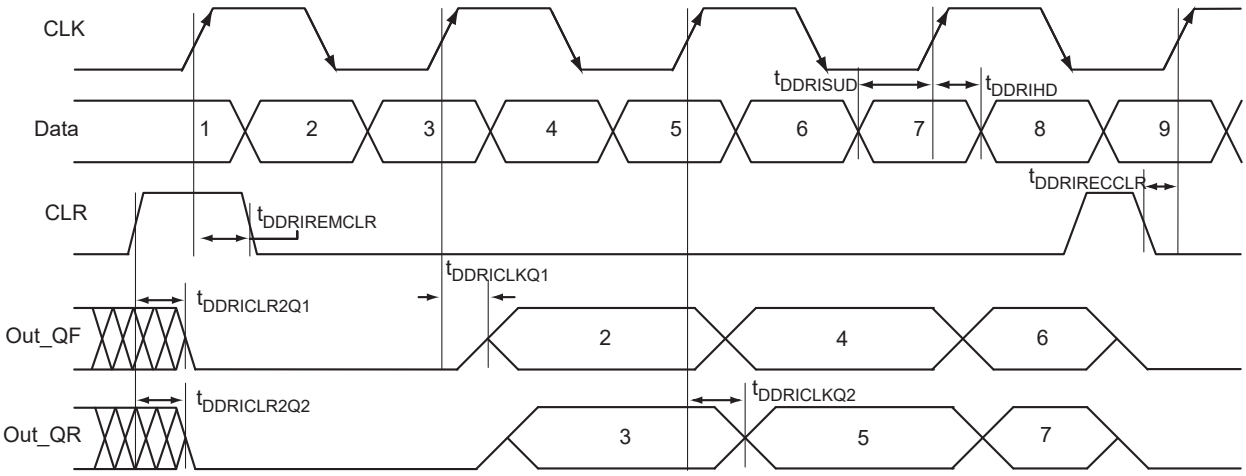

© 2023 Microchip Technology Inc. and its subsidiaries

2.3.7.1.1 Timing Characteristics

TABLE 2-101: INPUT DDR PROPAGATION DELAYS COMMERCIAL-CASE CONDITIONS: T_J = 70 °C, WORST CASE VCC = 1.425V

Parameter	Description	–2	–1	Std.	Units
$t_{DDRICLKQ1}$	Clock-to-Out Out_QR for Input DDR	0.27	0.31	0.37	ns
$t_{DDRICLKQ2}$	Clock-to-Out Out_QF for Input DDR	0.39	0.44	0.52	ns
$t_{DDRISUD}$	Data Setup for Input DDR (Fall)	0.25	0.28	0.33	ns
	Data Setup for Input DDR (Rise)	0.25	0.28	0.33	ns
t_{DDRIHD}	Data Hold for Input DDR (Fall)	0.00	0.00	0.00	ns
	Data Hold for Input DDR (Rise)	0.00	0.00	0.00	ns
$t_{DDRICLR2Q1}$	Asynchronous Clear-to-Out Out_QR for Input DDR	0.46	0.53	0.62	ns
$t_{DDRICLR2Q2}$	Asynchronous Clear-to-Out Out_QF for Input DDR	0.57	0.65	0.76	ns
$t_{DDRIREMCLR}$	Asynchronous Clear Removal time for Input DDR	0.00	0.00	0.00	ns
$t_{DDRIRECCLR}$	Asynchronous Clear Recovery time for Input DDR	0.22	0.25	0.30	ns
$t_{DDRIWCLR}$	Asynchronous Clear Minimum Pulse Width for Input DDR	0.22	0.25	0.30	ns
$t_{DDRICKMPWH}$	Clock Minimum Pulse Width High for Input DDR	0.36	0.41	0.48	ns
$t_{DDRICKMPWL}$	Clock Minimum Pulse Width Low for Input DDR	0.32	0.37	0.43	ns
$F_{DDRIMAX}$	Maximum Frequency for Input DDR	350	309	263	MHz

Note: For specific junction temperature and voltage-supply levels, refer to Table 2-6 for derating values.

2.3.7.2 Output DDR Module

TABLE 2-102: PARAMETER DEFINITIONS

Parameter Name	Parameter Definition	Measuring Nodes (from, to)
$t_{DDROCLKQ}$	Clock-to-Out	B, E
$t_{DDROCLR2Q}$	Asynchronous Clear-to-Out	C, E
$t_{DDROREMCLR}$	Clear Removal	C, B
$t_{DDRORECCLR}$	Clear Recovery	C, B
$t_{DDROSUD1}$	Data Setup Data_F	A, B
$t_{DDROSUD2}$	Data Setup Data_R	D, B
$t_{DDROHD1}$	Data Hold Data_F	A, B
$t_{DDROHD2}$	Data Hold Data_R	D, B

FIGURE 2-22: OUTPUT DDR TIMING MODEL

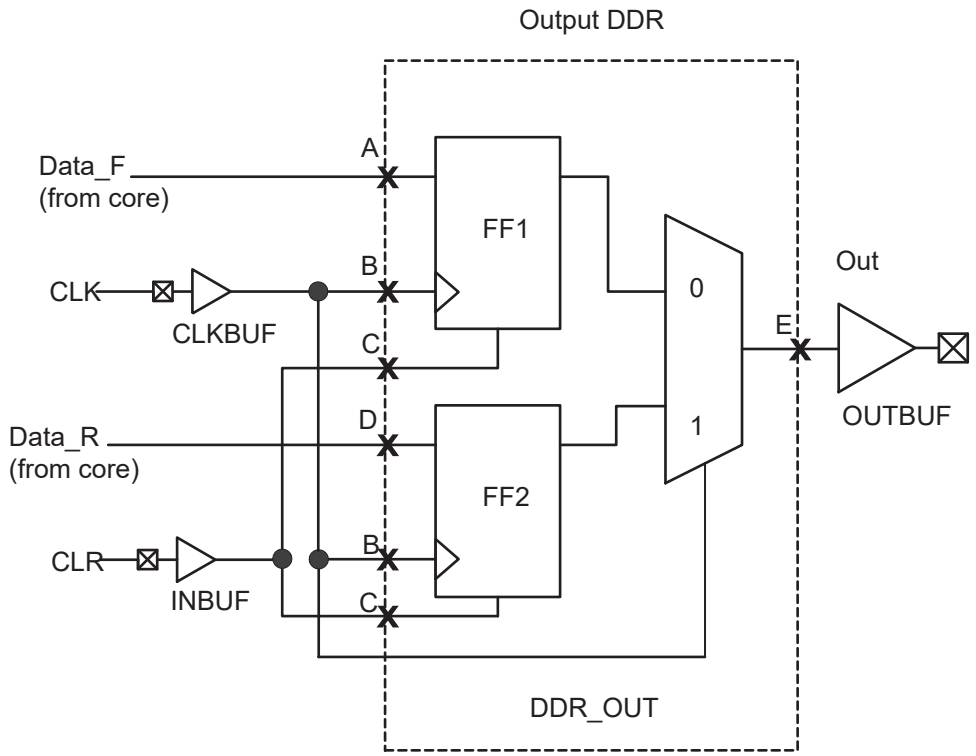

FIGURE 2-23: OUTPUT DDR TIMING DIAGRAM

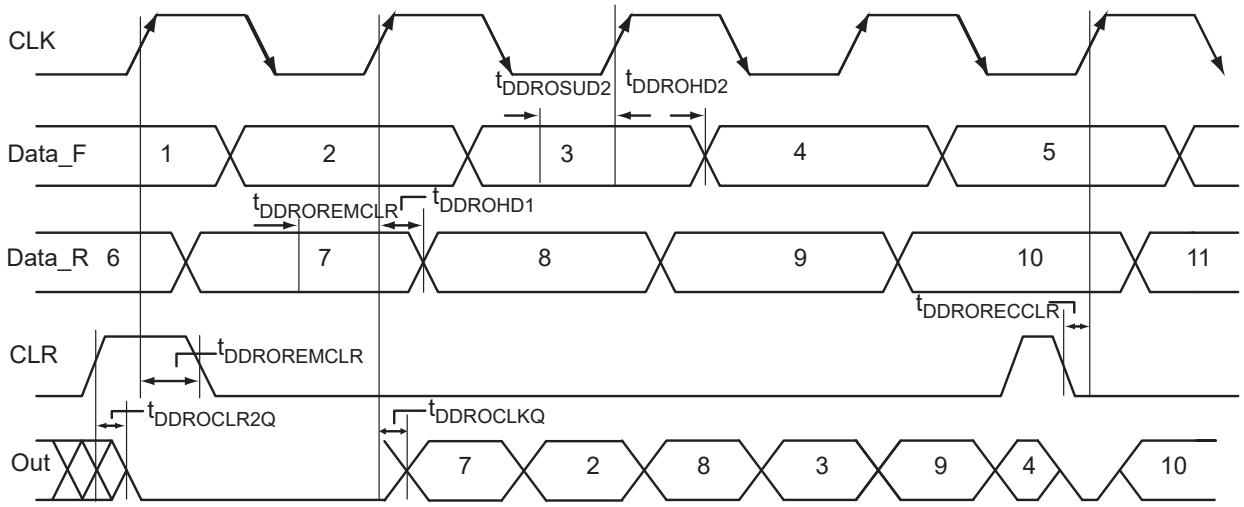

© 2023 Microchip Technology Inc. and its subsidiaries

2.3.7.2.1 Timing Characteristics

TABLE 2-103: OUTPUT DDR PROPAGATION DELAYS COMMERCIAL-CASE CONDITIONS: T_J = 70 °C, WORST-CASE VCC = 1.425V

Parameter	Description	–2	–1	Std.	Units
$t_{DDROCLKQ}$	Clock-to-Out of DDR for Output DDR	0.70	0.80	0.94	ns
$t_{DDROSUD1}$	Data_F Data Setup for Output DDR	0.38	0.43	0.51	ns
$t_{DDROSUD2}$	Data_R Data Setup for Output DDR	0.38	0.43	0.51	ns
$t_{DDROHD1}$	Data_F Data Hold for Output DDR	0.00	0.00	0.00	ns
$t_{DDROHD2}$	Data_R Data Hold for Output DDR	0.00	0.00	0.00	ns
$t_{DDROCLR2Q}$	Asynchronous Clear-to-Out for Output DDR	0.80	0.91	1.07	ns
$t_{DDROREMCLR}$	Asynchronous Clear Removal Time for Output DDR	0.00	0.00	0.00	ns
$t_{DDRORECCLR}$	Asynchronous Clear Recovery Time for Output DDR	0.22	0.25	0.30	ns
$t_{DDROWCLR1}$	Asynchronous Clear Minimum Pulse Width for Output DDR	0.22	0.25	0.30	ns
$t_{DDROCKMPWH}$	Clock Minimum Pulse Width High for the Output DDR	0.36	0.41	0.48	ns
$t_{DDROCKMPWL}$	Clock Minimum Pulse Width Low for the Output DDR	0.32	0.37	0.43	ns
F_{DDOMAX}	Maximum Frequency for the Output DDR	350	309	263	MHz

Note: For specific junction temperature and voltage supply levels, refer to Table 2-6 for derating values.

2.4 VersaTile Characteristics

2.4.1 VERSATILE SPECIFICATIONS AS A COMBINATORIAL MODULE

The ProASIC 3 library offers all combinations of LUT-3 combinatorial functions. In this section, timing characteristics are presented for a sample of the library. For more details, refer to the *Fusion, IGLOO®/e, and ProASIC 3/E Macro Library Guide*.

FIGURE 2-24: SAMPLE OF COMBINATORIAL CELLS

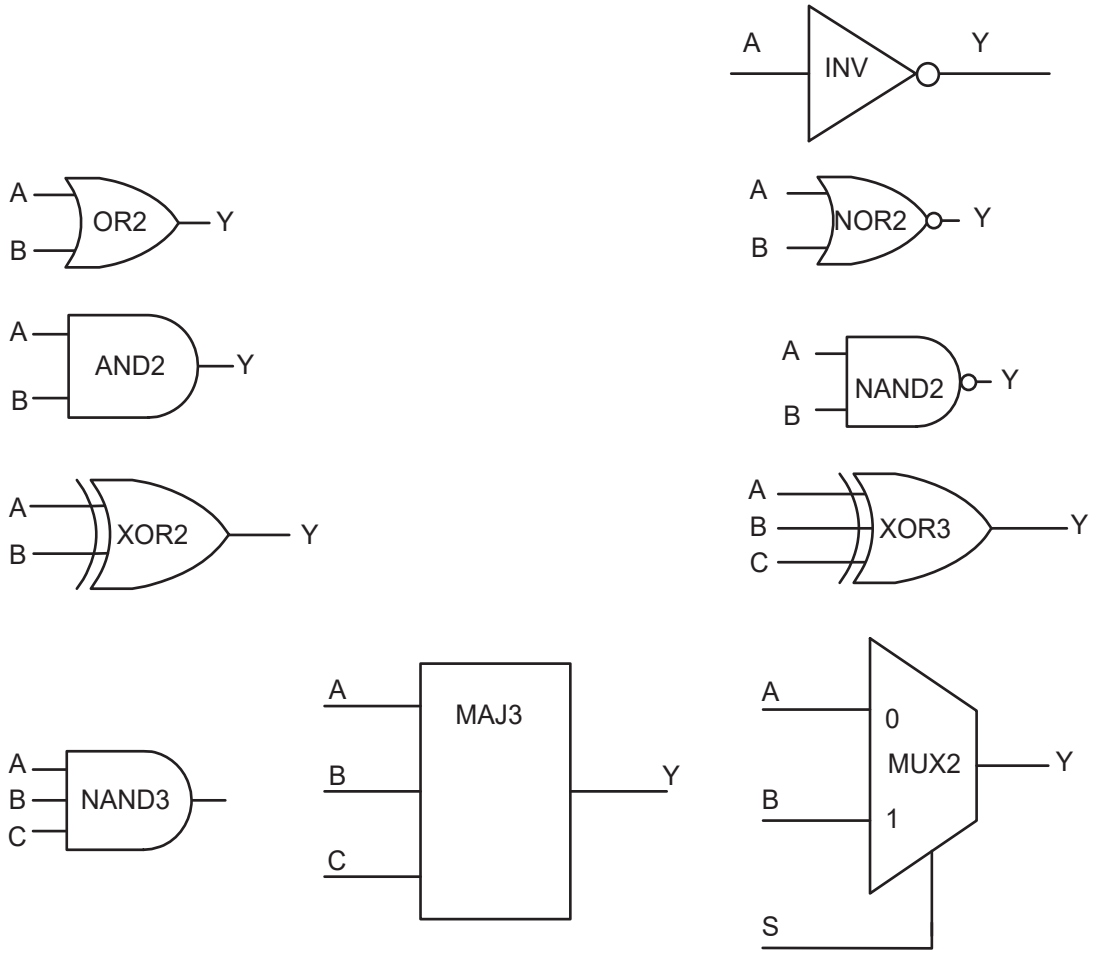

© 2023 Microchip Technology Inc. and its subsidiaries

FIGURE 2-25: TIMING MODEL AND WAVEFORMS

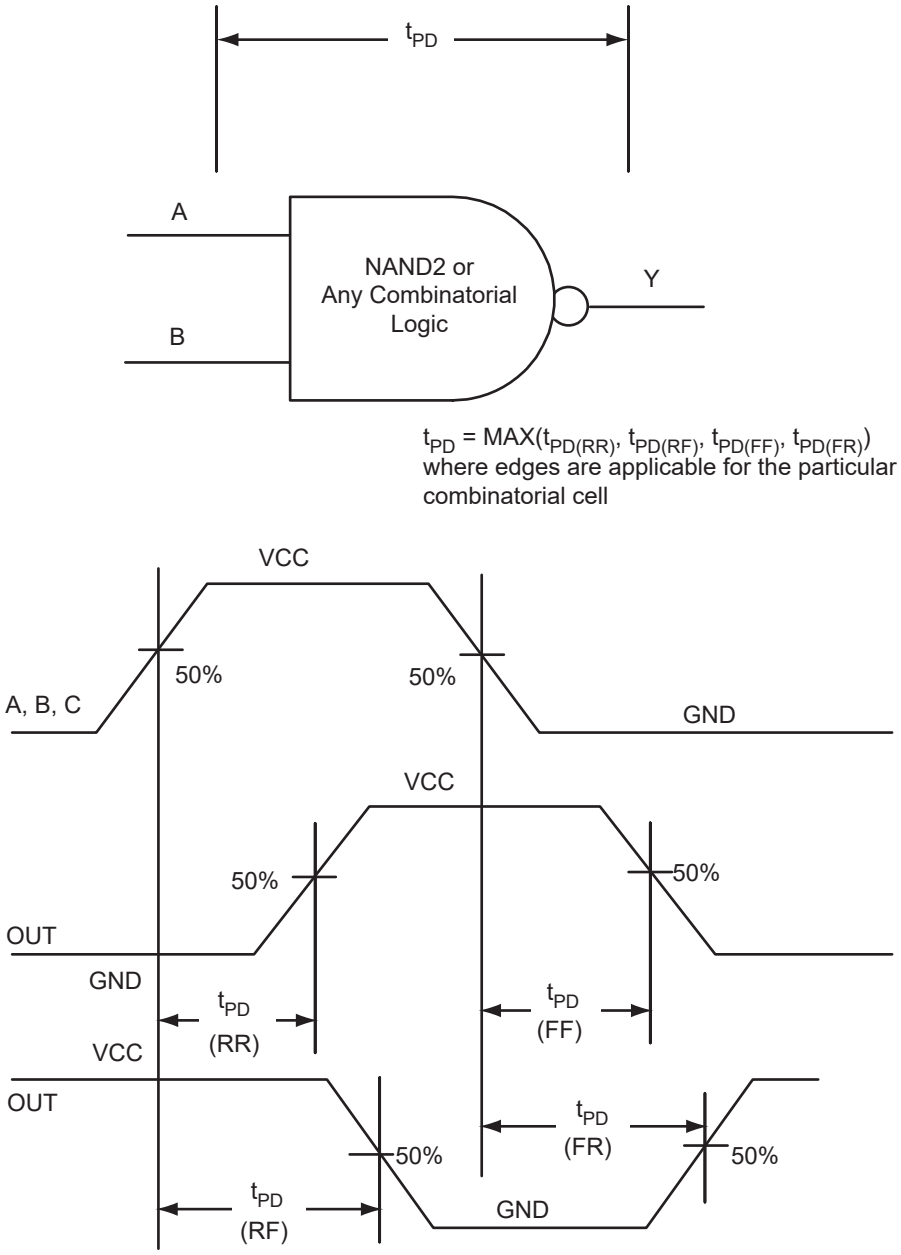

2.4.1.1 Timing Characteristics

TABLE 2-104: COMBINATORIAL CELL PROPAGATION DELAYS COMMERCIAL-CASE CONDITIONS: T_J = 70 °C, WORST-CASE VCC = 1.425V

Combinatorial Cell	Equation	Parameter	–2	–1	Std.	Units
INV	Y = !A	t_{PD}	0.40	0.46	0.54	ns
AND2	Y = A · B	t_{PD}	0.47	0.54	0.63	ns
NAND2	Y = !(A · B)	t_{PD}	0.47	0.54	0.63	ns
OR2	Y = A + B	t_{PD}	0.49	0.55	0.65	ns
NOR2	Y = !(A + B)	t_{PD}	0.49	0.55	0.65	ns
XOR2	Y = A ⊕ B	t_{PD}	0.74	0.84	0.99	ns
MAJ3	Y = MAJ(A, B, C)	t_{PD}	0.70	0.79	0.93	ns
XOR3	Y = A ⊕ B ⊕ C	t_{PD}	0.87	1.00	1.17	ns
MUX2	Y = A !S + B S	t_{PD}	0.51	0.58	0.68	ns
AND3	Y = A · B · C	t_{PD}	0.56	0.64	0.75	ns

Note: For specific junction temperature and voltage supply levels, refer to Table 2-6 for derating values.

2.4.2 VERSATILE SPECIFICATIONS AS A SEQUENTIAL MODULE

The ProASIC 3 library offers a wide variety of sequential cells, including flip-flops and latches. Each has a data input and optional enable, clear, or preset. In this section, timing characteristics are presented for a representative sample from the library. For more details, refer to the *Fusion, IGLOO/e, and ProASIC 3/E Macro Library Guide*.

FIGURE 2-26: SAMPLE OF SEQUENTIAL CELLS

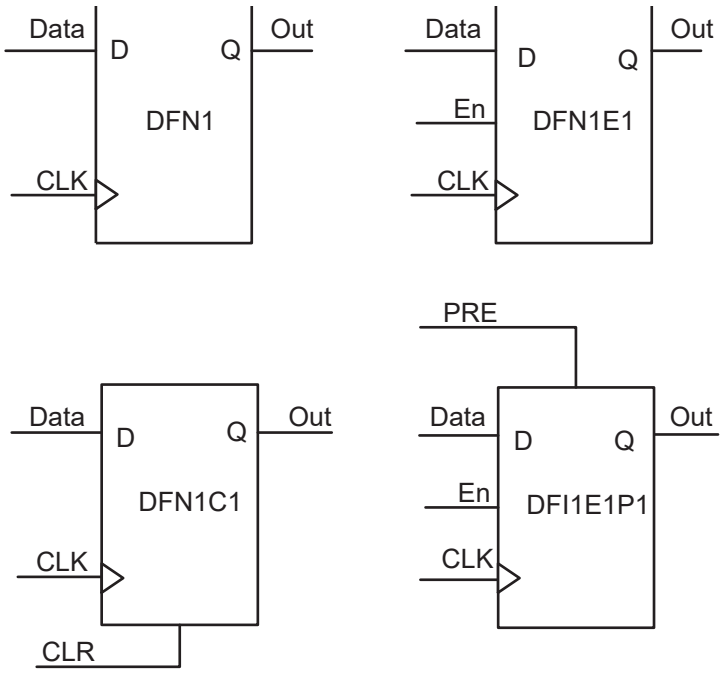

2.4.2.1 Timing Characteristics

© 2023 Microchip Technology Inc. and its subsidiaries

FIGURE 2-27: TIMING MODEL AND WAVEFORMS

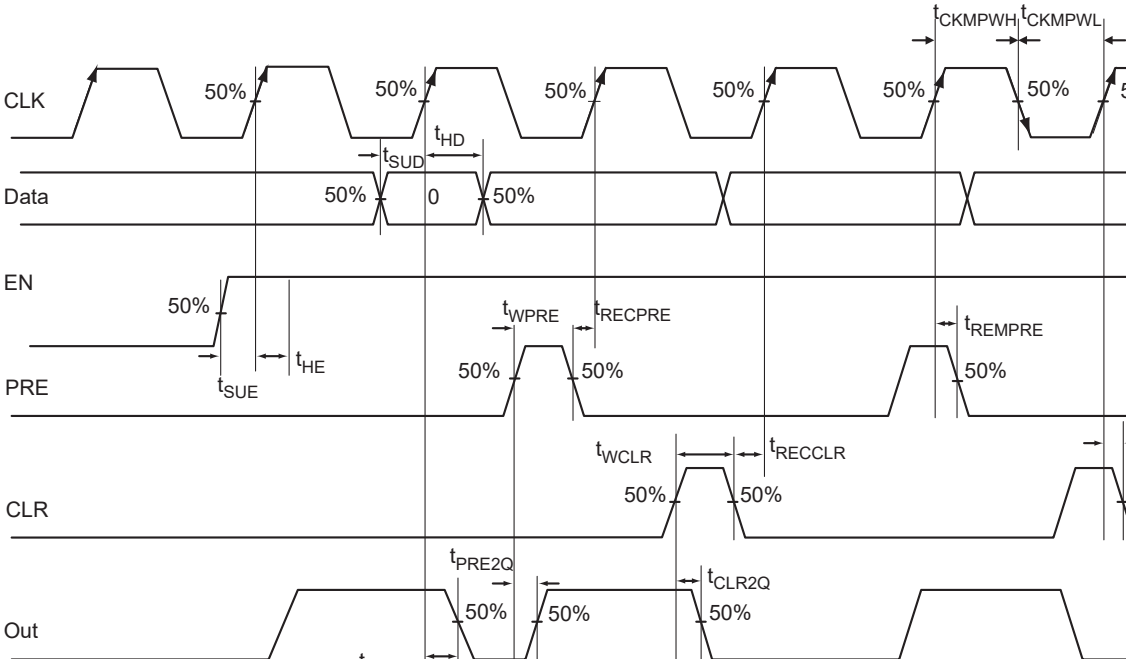

TABLE 2-105: REGISTER DELAYS COMMERCIAL-CASE CONDITIONS: T_J = 70 °C, WORST-CASE VCC = 1.425V

Parameter	Description	–2	–1	Std.	Units
t_{CLKQ}	Clock-to-Q of the Core Register	0.55	0.63	0.74	ns
t_{SUD}	Data Setup Time for the Core Register	0.43	0.49	0.57	ns
t_{HD}	Data Hold Time for the Core Register	0.00	0.00	0.00	ns
t_{SUE}	Enable Setup Time for the Core Register	0.45	0.52	0.61	ns
t_{HE}	Enable Hold Time for the Core Register	0.00	0.00	0.00	ns
t_{CLR2Q}	Asynchronous Clear-to-Q of the Core Register	0.40	0.45	0.53	ns
t_{PRE2Q}	Asynchronous Preset-to-Q of the Core Register	0.40	0.45	0.53	ns
t_{REMCLR}	Asynchronous Clear Removal Time for the Core Register	0.00	0.00	0.00	ns
t_{RECCLR}	Asynchronous Clear Recovery Time for the Core Register	0.22	0.25	0.30	ns
t_{REMPRE}	Asynchronous Preset Removal Time for the Core Register	0.00	0.00	0.00	ns
t_{RECPRE}	Asynchronous Preset Recovery Time for the Core Register	0.22	0.25	0.30	ns
t_{WCLR}	Asynchronous Clear Minimum Pulse Width for the Core Register	0.22	0.25	0.30	ns
t_{WPRE}	Asynchronous Preset Minimum Pulse Width for the Core Register	0.22	0.25	0.30	ns
t_{CKMPWH}	Clock Minimum Pulse Width High for the Core Register	0.32	0.37	0.43	ns
t_{CKMPWL}	Clock Minimum Pulse Width Low for the Core Register	0.36	0.41	0.48	ns

Note: For specific junction temperature and voltage supply levels, refer to Table 2-6 for derating values.

2.5 Global Resource Characteristics

2.5.1 A3P250 CLOCK TREE TOPOLOGY

Clock delays are device-specific. Figure 2-28 is an example of a global tree used for clock routing. The global tree presented in Figure 2-28 is driven by a CCC located on the west side of the A3P250 device. It is used to drive all D-flip-flops in the device.

FIGURE 2-28: EXAMPLE OF GLOBAL TREE USE IN AN A3P250 DEVICE FOR CLOCK ROUTING

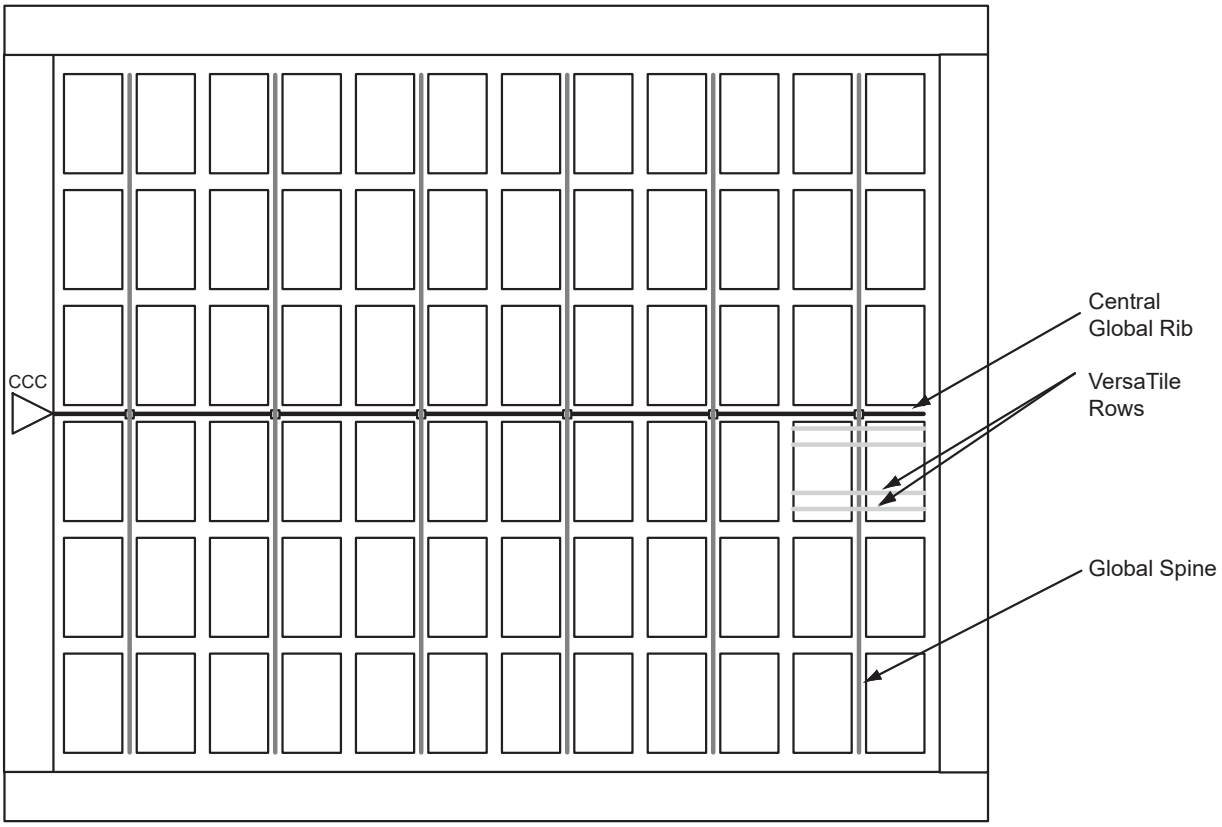

2.5.2 GLOBAL TREE TIMING CHARACTERISTICS

Global clock delays include the central rib delay, the spine delay, and the row delay. Delays do not include I/O input buffer clock delays, as these are I/O standard–dependent, and the clock may be driven and conditioned internally by the CCC module. For more details on clock conditioning capabilities, refer to the Section 2.6 Clock Conditioning Circuits. Table 2-106 to Table 2-112 present minimum and maximum global clock delays within each device. Minimum and maximum delays are measured with minimum and maximum loading.

© 2023 Microchip Technology Inc. and its subsidiaries

2.5.2.1 Timing Characteristics

TABLE 2-106: A3P030 GLOBAL RESOURCE COMMERCIAL-CASE CONDITIONS: T_J = 70 °C, VCC = 1.425V

Parameter	Description	–2		–1		Std.		Units
		Min.[1]	Max.[2]	Min.[1]	Max.[2]	Min.[1]	Max.[2]	
t_{RCKL}	Input Low Delay for Global Clock	0.67	0.81	0.76	0.92	0.89	1.09	ns
t_{RCKH}	Input High Delay for Global Clock	0.68	0.85	0.77	0.97	0.91	1.14	ns
$t_{RCKMPWH}$	Minimum Pulse Width High for Global Clock	0.75	—	0.85	—	1.00	—	ns
$t_{RCKMPWL}$	Minimum Pulse Width Low for Global Clock	0.85	—	0.96	—	1.13	—	ns
t_{RCKSW}	Maximum Skew for Global Clock	—	0.18	—	0.21	—	0.24	ns

Note 1: Value reflects minimum load. The delay is measured from the CCC output to the clock pin of a sequential element, located in a lightly loaded row (single element is connected to the global net).

2: Value reflects maximum load. The delay is measured on the clock pin of the farthest sequential element, located in a fully loaded row (all available flip-flops are connected to the global net in the row).

3: For specific junction temperature and voltage supply levels, refer to Table 2-6 for derating values.

TABLE 2-107: A3P060 GLOBAL RESOURCE COMMERCIAL-CASE CONDITIONS: T_J = 70 °C, VCC = 1.425V

Parameter	Description	–2		–1		Std.		Units
		Min.[1]	Max.[2]	Min.[1]	Max.[2]	Min.[1]	Max.[2]	
t_{RCKL}	Input Low Delay for Global Clock	0.71	0.93	0.81	1.05	0.95	1.24	ns
t_{RCKH}	Input High Delay for Global Clock	0.70	0.96	0.80	1.09	0.94	1.28	ns
$t_{RCKMPWH}$	Minimum Pulse Width High for Global Clock	0.75	—	0.85	—	1.00	—	ns
$t_{RCKMPWL}$	Minimum Pulse Width Low for Global Clock	0.85	—	0.96	—	1.13	—	ns
t_{RCKSW}	Maximum Skew for Global Clock	—	0.26	—	0.29	—	0.34	ns

Note 1: Value reflects minimum load. The delay is measured from the CCC output to the clock pin of a sequential element, located in a lightly loaded row (single element is connected to the global net).

2: Value reflects maximum load. The delay is measured on the clock pin of the farthest sequential element, located in a fully loaded row (all available flip-flops are connected to the global net in the row).

3: For specific junction temperature and voltage supply levels, refer to Table 2-6 for derating values.

TABLE 2-108: A3P125 GLOBAL RESOURCE COMMERCIAL-CASE CONDITIONS: T_J = 70 °C, VCC = 1.425V

Parameter	Description	–2		–1		Std.		Units
		Min.[1]	Max.[2]	Min.[1]	Max.[2]	Min.[1]	Max.[2]	
t_{RCKL}	Input Low Delay for Global Clock	0.77	0.99	0.87	1.12	1.03	1.32	ns
t_{RCKH}	Input High Delay for Global Clock	0.76	1.02	0.87	1.16	1.02	1.37	ns
$t_{RCKMPWH}$	Minimum Pulse Width High for Global Clock	0.75	—	0.85	—	1.00	—	ns

TABLE 2-108: A3P125 GLOBAL RESOURCE COMMERCIAL-CASE CONDITIONS: T_J = 70 °C, VCC = 1.425V

Parameter	Description	–2		–1		Std.		Units
		Min.[1]	Max.[2]	Min.[1]	Max.[2]	Min.[1]	Max.[2]	
$t_{RCKMPWL}$	Minimum Pulse Width Low for Global Clock	0.85	—	0.96	—	1.13	—	ns
t_{RCKSW}	Maximum Skew for Global Clock	—	0.26	—	0.29	—	0.34	ns

Note 1: Value reflects minimum load. The delay is measured from the CCC output to the clock pin of a sequential element, located in a lightly loaded row (single element is connected to the global net).

2: Value reflects maximum load. The delay is measured on the clock pin of the farthest sequential element, located in a fully loaded row (all available flip-flops are connected to the global net in the row).

3: For specific junction temperature and voltage supply levels, refer to Table 2-6 for derating values.

TABLE 2-109: A3P250 GLOBAL RESOURCE COMMERCIAL-CASE CONDITIONS: T_J = 70 °C, VCC = 1.425V

Parameter	Description	–2		–1		Std.		Units
		Min.[1]	Max.[2]	Min.[1]	Max.[2]	Min.[1]	Max.[2]	
t_{RCKL}	Input Low Delay for Global Clock	0.80	1.01	0.91	1.15	1.07	1.36	ns
t_{RCKH}	Input High Delay for Global Clock	0.78	1.04	0.89	1.18	1.04	1.39	ns
$t_{RCKMPWH}$	Minimum Pulse Width High for Global Clock	0.75	—	0.85	—	1.00	—	ns
$t_{RCKMPWL}$	Minimum Pulse Width Low for Global Clock	0.85	—	0.96	—	1.13	—	ns
t_{RCKSW}	Maximum Skew for Global Clock	—	0.26	—	0.29	—	0.34	ns

Note 1: Value reflects minimum load. The delay is measured from the CCC output to the clock pin of a sequential element, located in a lightly loaded row (single element is connected to the global net).

2: Value reflects maximum load. The delay is measured on the clock pin of the farthest sequential element, located in a fully loaded row (all available flip-flops are connected to the global net in the row).

3: For specific junction temperature and voltage supply levels, refer to Table 2-6 for derating values.

TABLE 2-110: A3P400 GLOBAL RESOURCE COMMERCIAL-CASE CONDITIONS: T_J = 70 °C, VCC = 1.425V

Parameter	Description	–2		–1		Std.		Units
		Min.[1]	Max.[2]	Min.[1]	Max.[2]	Min.[1]	Max.[2]	
t_{RCKL}	Input Low Delay for Global Clock	0.87	1.09	0.99	1.24	1.17	1.46	ns
t_{RCKH}	Input High Delay for Global Clock	0.86	1.11	0.98	1.27	1.15	1.49	ns
$t_{RCKMPWH}$	Minimum Pulse Width High for Global Clock	0.75	—	0.85	—	1.00	—	ns
$t_{RCKMPWL}$	Minimum Pulse Width Low for Global Clock	0.85	—	0.96	—	1.13	—	ns
t_{RCKSW}	Maximum Skew for Global Clock	—	0.26	—	0.29	—	0.34	ns

Note 1: Value reflects minimum load. The delay is measured from the CCC output to the clock pin of a sequential element, located in a lightly loaded row (single element is connected to the global net).

2: Value reflects maximum load. The delay is measured on the clock pin of the farthest sequential element, located in a fully loaded row (all available flip-flops are connected to the global net in the row).

3: For specific junction temperature and voltage supply levels, refer to Table 2-6 for derating values.

© 2023 Microchip Technology Inc. and its subsidiaries

TABLE 2-111: A3P600 GLOBAL RESOURCE COMMERCIAL-CASE CONDITIONS: T_J = 70 °C, VCC = 1.425V

Parameter	Description	–2		–1		Std.		Units
		Min.[1]	Max.[2]	Min.[1]	Max.[2]	Min.[1]	Max.[2]	
t_{RCKL}	Input Low Delay for Global Clock	0.87	1.09	0.99	1.24	1.17	1.46	ns
t_{RCKH}	Input High Delay for Global Clock	0.86	1.11	0.98	1.27	1.15	1.49	ns
$t_{RCKMPWH}$	Minimum Pulse Width High for Global Clock	0.75	—	0.85	—	1.00	—	ns
$t_{RCKMPWL}$	Minimum Pulse Width Low for Global Clock	0.85	—	0.96	—	1.13	—	ns
t_{RCKSW}	Maximum Skew for Global Clock	—	0.26	—	0.29	—	0.34	ns

Note 1: Value reflects minimum load. The delay is measured from the CCC output to the clock pin of a sequential element, located in a lightly loaded row (single element is connected to the global net).

2: Value reflects maximum load. The delay is measured on the clock pin of the farthest sequential element, located in a fully loaded row (all available flip-flops are connected to the global net in the row).

3: For specific junction temperature and voltage supply levels, refer to Table 2-6 for derating values.

TABLE 2-112: A3P1000 GLOBAL RESOURCE COMMERCIAL-CASE CONDITIONS: T_J = 70 °C, VCC = 1.425V

Parameter	Description	–2		–1		Std.		Units
		Min.[1]	Max.[2]	Min.[1]	Max.[2]	Min.[1]	Max.[2]	
t_{RCKL}	Input Low Delay for Global Clock	0.94	1.16	1.07	1.32	1.26	1.55	ns
t_{RCKH}	Input High Delay for Global Clock	0.93	1.19	1.06	1.35	1.24	1.59	ns
$t_{RCKMPWH}$	Minimum Pulse Width High for Global Clock	0.75	—	0.85	—	1.00	—	ns
$t_{RCKMPWL}$	Minimum Pulse Width Low for Global Clock	0.85	—	0.96	—	1.13	—	ns
t_{RCKSW}	Maximum Skew for Global Clock	—	0.26	—	0.29	—	0.35	ns

Note 1: Value reflects minimum load. The delay is measured from the CCC output to the clock pin of a sequential element, located in a lightly loaded row (single element is connected to the global net).

2: Value reflects maximum load. The delay is measured on the clock pin of the farthest sequential element, located in a fully loaded row (all available flip-flops are connected to the global net in the row).

3: For specific junction temperature and voltage supply levels, refer to Table 2-6 for derating values.

2.6 Clock Conditioning Circuits

2.6.1 CCC ELECTRICAL SPECIFICATIONS

2.6.1.1 Timing Characteristics

TABLE 2-113: PROASIC 3 CCC/PLL SPECIFICATION

Parameter	Minimum	Typical	Maximum	Units
Clock Conditioning Circuitry Input Frequency f_{IN_CCC}	1.5	—	350	MHz
Clock Conditioning Circuitry Output Frequency f_{OUT_CCC}	0.75	—	350	MHz
Serial Clock (SCLK) for Dynamic PLL[1]	—	—	125	MHz
Delay Increments in Programmable Delay Blocks[2, 3]	—	200[4]	—	ps
Number of Programmable Values in Each Programmable Delay Block	—	—	32	—
Input Period Jitter	—	—	1.5	ns
CCC Output Peak-to-Peak Period Jitter F_{CCC_OUT}	Max Peak-to-Peak Period Jitter			
	1 Global Network Used		3 Global Networks Used	
0.75 MHz to 24 MHz	0.50%	—	0.70%	—
24 MHz to 100 MHz	1.00%	—	1.20%	—
100 MHz to 250 MHz	1.75%	—	2.00%	—
250 MHz to 350 MHz	2.50%	—	5.60%	—
Acquisition Time	—	—	—	—
(A3P250 and A3P1000 only)LockControl = 0	—	—	300	µs
LockControl = 1	—	—	300	µs
(all other dies)LockControl = 0	—	—	300	µs
LockControl = 1	—	—	6.0	ms
Tracking Jitter [5]	—	—	—	—
(A3P250 and A3P1000 only)LockControl = 0	—	—	1.6	ns
LockControl = 1	—	—	1.6	ns
(all other dies)LockControl = 0	—	—	1.6	ns
LockControl = 1	—	—	0.8	ns
Output Duty Cycle	48.5	—	51.5	%
Delay Range in Block: Programmable Delay 1[2, 3]	0.6	—	5.56	ns

© 2023 Microchip Technology Inc. and its subsidiaries

TABLE 2-113: PROASIC 3 CCC/PLL SPECIFICATION

Parameter	Minimum	Typical	Maximum	Units
Delay Range in Block: Programmable Delay 2[2, 3]	0.225	—	5.56	ns
Delay Range in Block: Fixed Delay[2, 3]	—	2.2	—	ns

Note 1: Maximum value obtained for a –2 speed-grade device in worst-case commercial conditions. For specific junction temperature and voltage supply levels, refer to Table 2-6 for derating values.

2: This delay is a function of voltage and temperature. See Table 2-6 for deratings.

3: T_J = 25 °C, VCC = 1.5 V

4: When the CCC/PLL core is generated by Microchip core generator software, not all delay values of the specified delay increments are available. Refer to the Libero SoC Online Help for more information.

5: Tracking jitter is defined as the variation in clock edge position of PLL outputs with reference to the PLL input clock edge. Tracking jitter does not measure the variation in PLL output period, which is covered by the period jitter parameter.

6: The A3P030 device does not contain a PLL.

FIGURE 2-29: PEAK-TO-PEAK JITTER DEFINITION

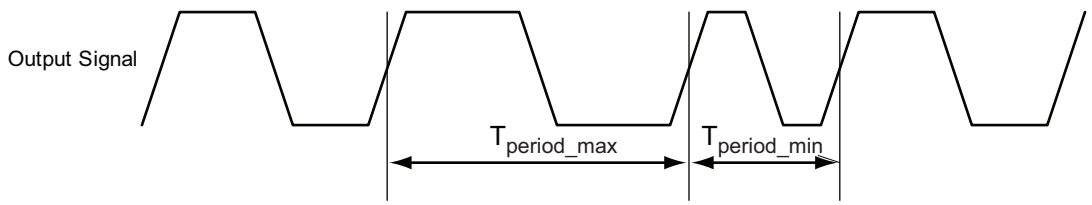

Note: Peak-to-peak jitter measurements are defined by $T_{peak\text{-}to\text{-}peak} = T_{period_max} - T_{period_min}$.

2.7 Embedded SRAM and FIFO Characteristics

2.7.1 SRAM

FIGURE 2-30: RAM MODELS

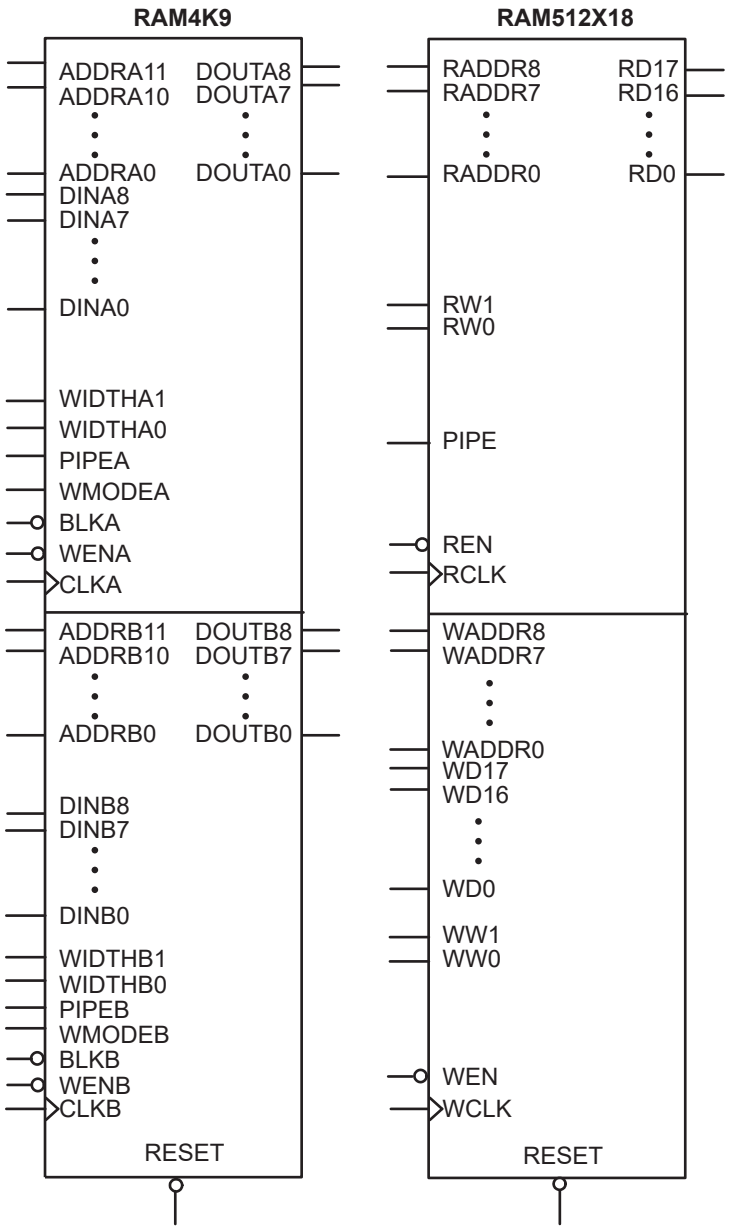

2.7.1.1 Timing Waveforms

© 2023 Microchip Technology Inc. and its subsidiaries

FIGURE 2-31: RAM READ FOR PASS-THROUGH OUTPUT. APPLICABLE TO BOTH RAM4K9 AND RAM512X18.

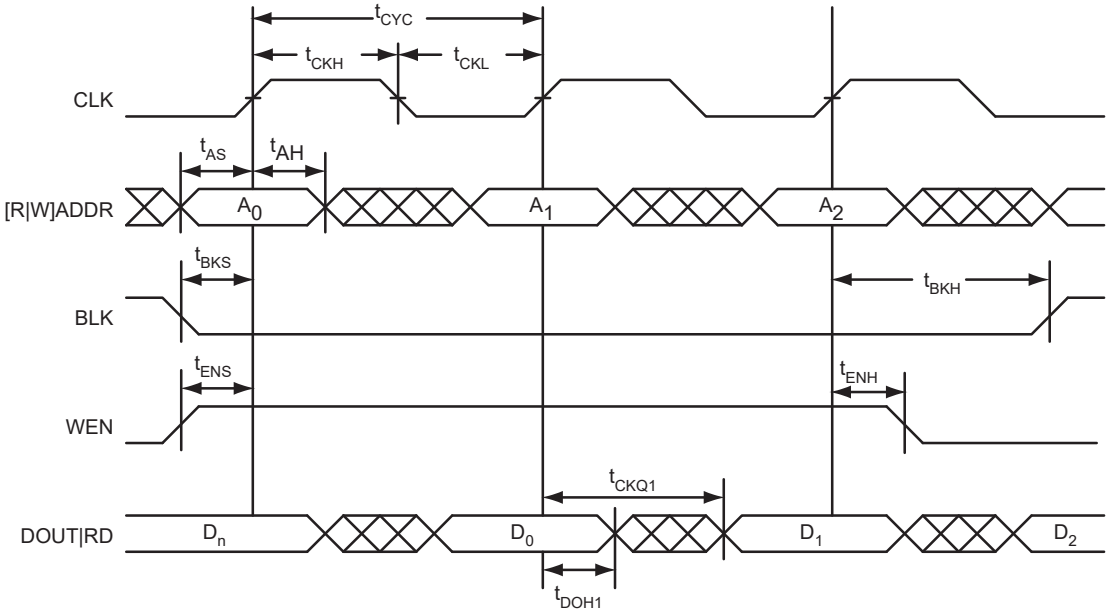

FIGURE 2-32: RAM READ FOR PIPELINED OUTPUT. APPLICABLE TO BOTH RAM4K9 AND RAM512X18.

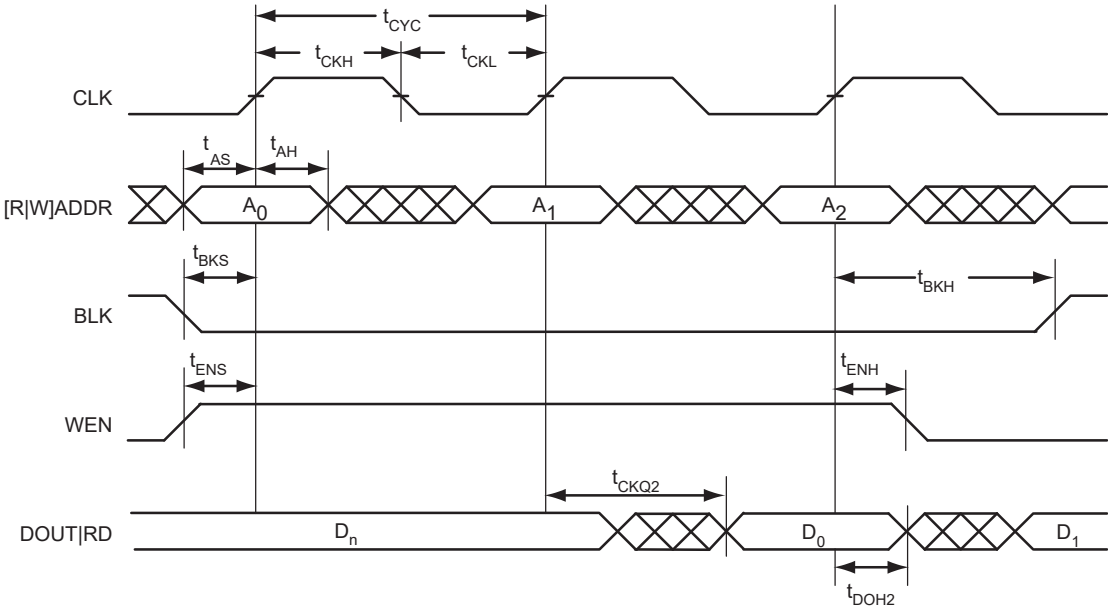

FIGURE 2-33: RAM WRITE, OUTPUT RETAINED. APPLICABLE TO BOTH RAM4K9 AND RAM512X18.

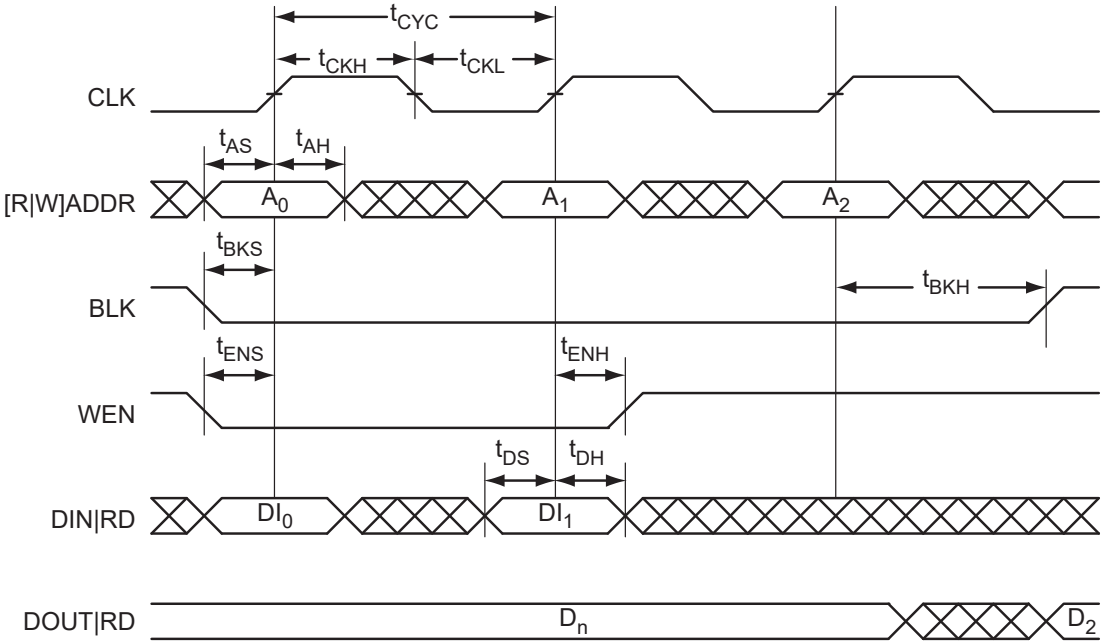

FIGURE 2-34: RAM WRITE, OUTPUT AS WRITE DATA (WMODE = 1). APPLICABLE TO RAM4K9 ONLY.

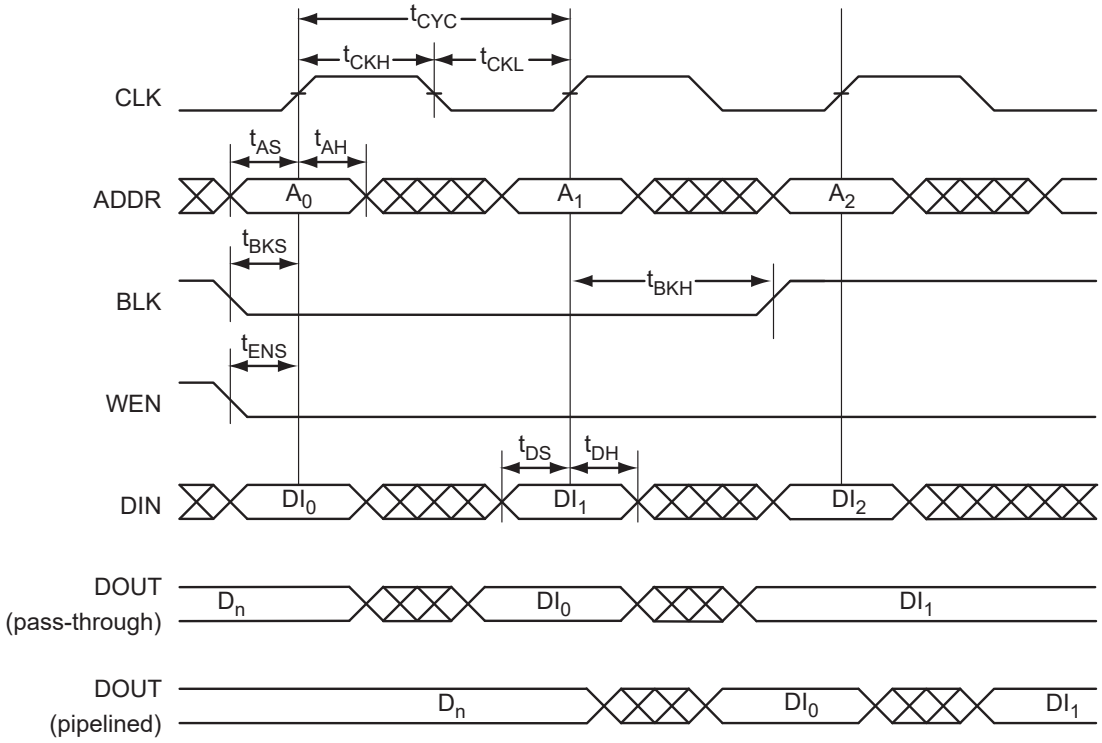

© 2023 Microchip Technology Inc. and its subsidiaries

FIGURE 2-35: RAM RESET. APPLICABLE TO BOTH RAM4K9 AND RAM512X18.

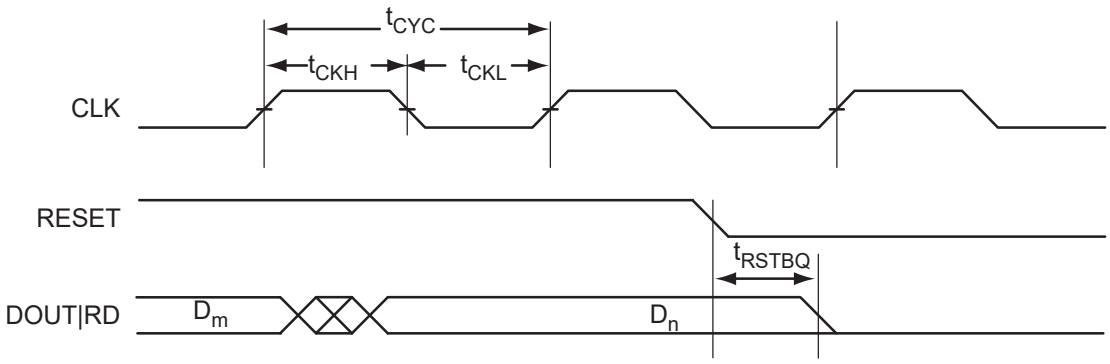

2.7.1.2 Timing Characteristics

TABLE 2-114: RAM4K9 COMMERCIAL-CASE CONDITIONS: T_J = 70 °C, WORST-CASE VCC = 1.425 V

Parameter	Description	–2	–1	Std.	Units
t_{AS}	Address setup time	0.25	0.28	0.33	ns
t_{AH}	Address hold time	0.00	0.00	0.00	ns
t_{ENS}	REN, WEN setup time	0.14	0.16	0.19	ns
t_{ENH}	REN, WEN hold time	0.10	0.11	0.13	ns
t_{BKS}	BLK setup time	0.23	0.27	0.31	ns
t_{BKH}	BLK hold time	0.02	0.02	0.02	ns
t_{DS}	Input data (DIN) setup time	0.18	0.21	0.25	ns
t_{DH}	Input data (DIN) hold time	0.00	0.00	0.00	ns
t_{CKQ1}	Clock High to new data valid on DOUT (output retained, WMODE = 0)	2.36	2.68	3.15	ns
	Clock High to new data valid on DOUT (flow-through, WMODE = 1)	1.79	2.03	2.39	ns
t_{CKQ2}	Clock High to new data valid on DOUT (pipelined)	0.89	1.02	1.20	ns
t_{C2CWWL}[1]	Address collision clk-to-clk delay for reliable write after write on same address—Applicable to Closing Edge	0.33	0.28	0.25	ns
t_{C2CWWH}[1]	Address collision clk-to-clk delay for reliable write after write on same address—Applicable to Rising Edge	0.30	0.26	0.23	ns
t_{C2CRWH}[1]	Address collision clk-to-clk delay for reliable read access after write on same address—Applicable to Opening Edge	0.45	0.38	0.34	ns
t_{C2CWRH}[1]	Address collision clk-to-clk delay for reliable write access after read on same address— Applicable to Opening Edge	0.49	0.42	0.37	ns
t_{RSTBQ}	RESET Low to data out Low on DOUT (flow-through)	0.92	1.05	1.23	ns
	RESET Low to Data Out Low on DOUT (pipelined)	0.92	1.05	1.23	ns
$t_{REMRSTB}$	RESET removal	0.29	0.33	0.38	ns
$t_{RECRSTB}$	RESET recovery	1.50	1.71	2.01	ns
$t_{MPWRSTB}$	RESET minimum pulse width	0.21	0.24	0.29	ns

TABLE 2-114: RAM4K9 COMMERCIAL-CASE CONDITIONS: T_J = 70 °C, WORST-CASE VCC = 1.425 V (CONTINUED)

Parameter	Description	–2	–1	Std.	Units
t_{CYC}	Clock cycle time	3.23	3.68	4.32	ns
F_{MAX}	Maximum frequency	310	272	231	MHz

Note 1: For more information, refer to the application note Simultaneous Read-Write Operations in Dual-Port SRAM for Flash-Based cSoCs and FPGAs.

2: For specific junction temperature and voltage supply levels, refer to Table 2-6 for derating values.

TABLE 2-115: RAM512X18 COMMERCIAL-CASE CONDITIONS: T_J = 70 °C, WORST-CASE VCC = 1.425V

Parameter	Description	–2	–1	Std.	Units
t_{AS}	Address setup time	0.25	0.28	0.33	ns
t_{AH}	Address hold time	0.00	0.00	0.00	ns
t_{ENS}	REN, WEN setup time	0.13	0.15	0.17	ns
t_{ENH}	REN, WEN hold time	0.10	0.11	0.13	ns
t_{DS}	Input data (WD) setup time	0.18	0.21	0.25	ns
t_{DH}	Input data (WD) hold time	0.00	0.00	0.00	ns
t_{CKQ1}	Clock High to new data valid on RD (output retained)	2.16	2.46	2.89	ns
t_{CKQ2}	Clock High to new data valid on RD (pipelined)	0.90	1.02	1.20	ns
t_{C2CRWH}[1]	Address collision clk-to-clk delay for reliable read access after write on same address—Applicable to Opening Edge	0.50	0.43	0.38	ns
t_{C2CWRH}[1]	Address collision clk-to-clk delay for reliable write access after read on same address—Applicable to Opening Edge	0.59	0.50	0.44	ns
t_{RSTBQ}	RESET Low to data out Low on RD (flow-through)	0.92	1.05	1.23	ns
	RESET Low to data out Low on RD (pipelined)	0.92	1.05	1.23	ns
$t_{REMRSTB}$	RESET removal	0.29	0.33	0.38	ns
$t_{RECRSTB}$	RESET recovery	1.50	1.71	2.01	ns
$t_{MPWRSTB}$	RESET minimum pulse width	0.21	0.24	0.29	ns
t_{CYC}	Clock cycle time	3.23	3.68	4.32	ns
F_{MAX}	Maximum frequency	310	272	231	MHz

Note 1: For more information, refer to the application note Simultaneous Read-Write Operations in Dual-Port SRAM for Flash-Based cSoCs and FPGAs.

2: For specific junction temperature and voltage supply levels, refer to Table 2-6 for derating values.

© 2023 Microchip Technology Inc. and its subsidiaries

2.7.2 FIFO

FIGURE 2-36: FIFO MODEL

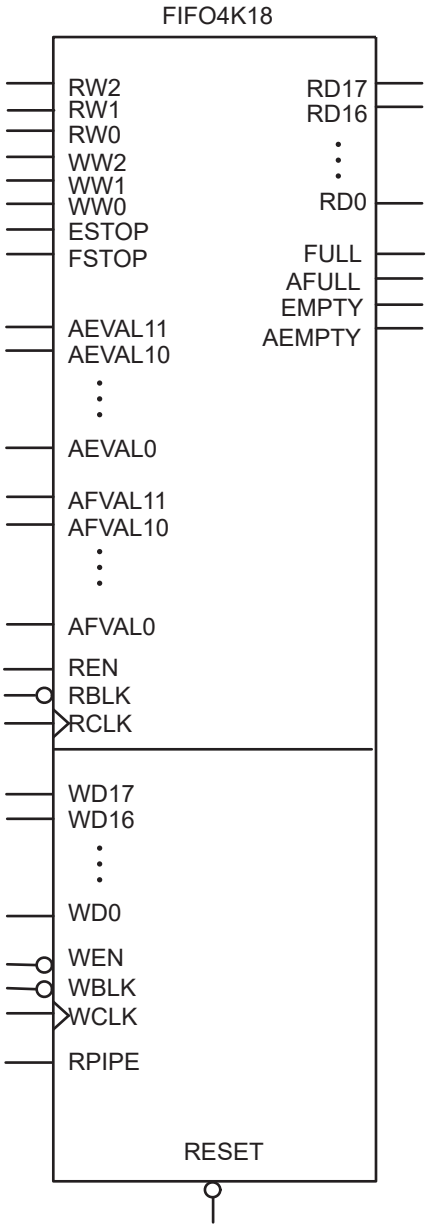

2.7.2.1 Timing Waveforms

FIGURE 2-37: FIFO READ

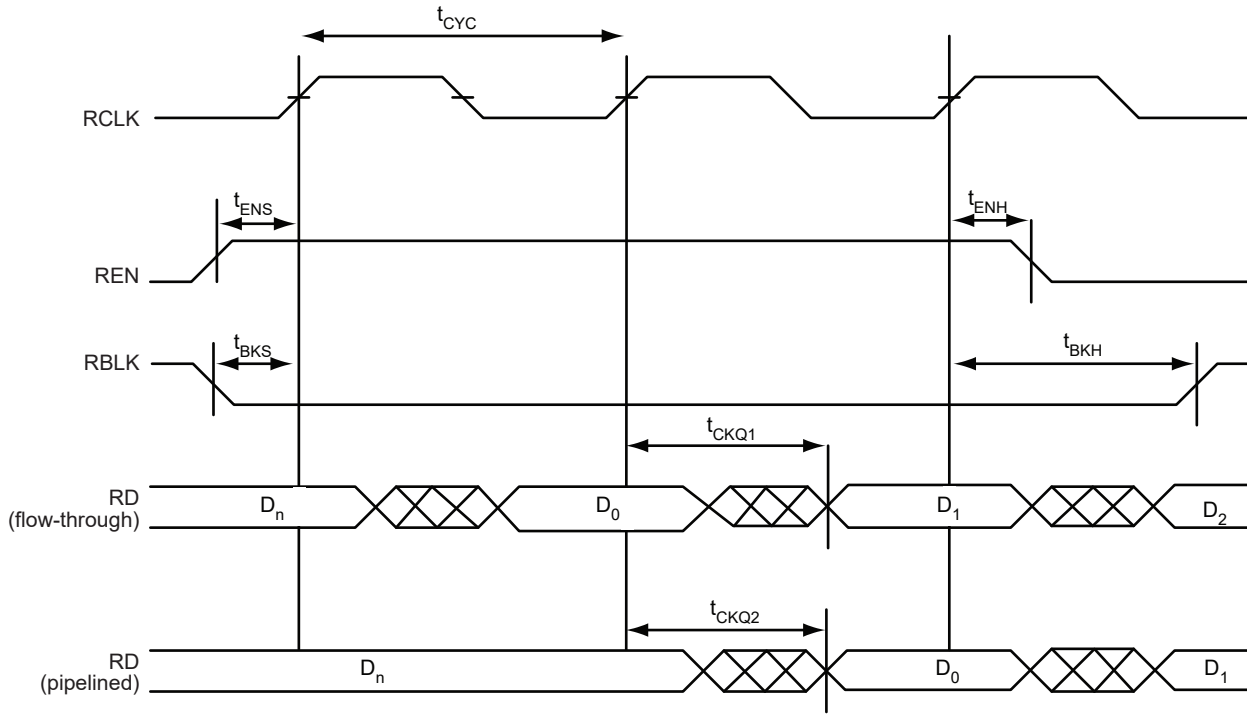

FIGURE 2-38: FIFO WRITE

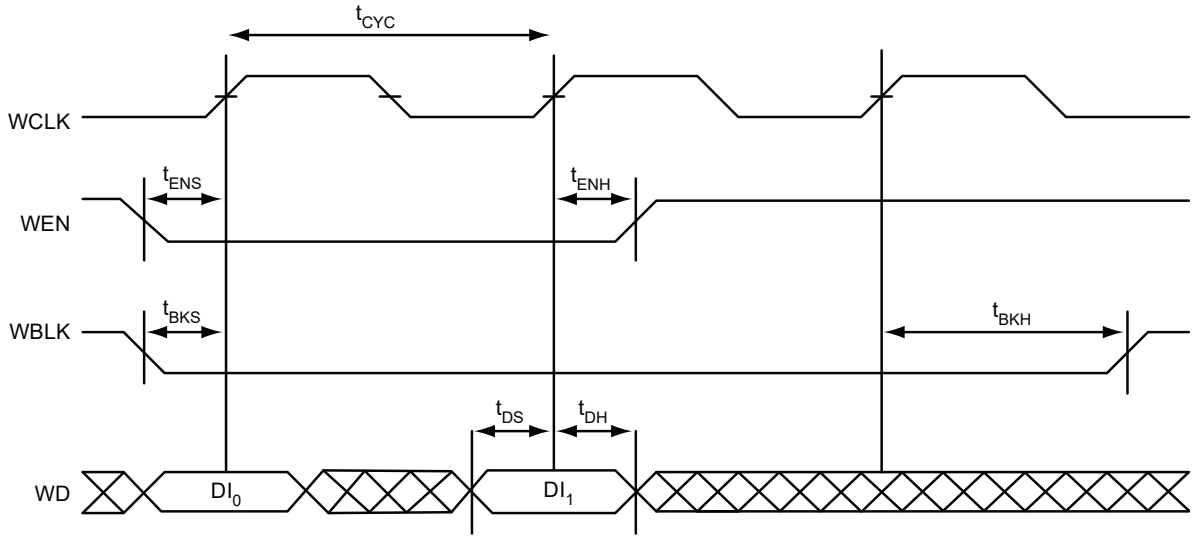

© 2023 Microchip Technology Inc. and its subsidiaries

FIGURE 2-39: FIFO RESET

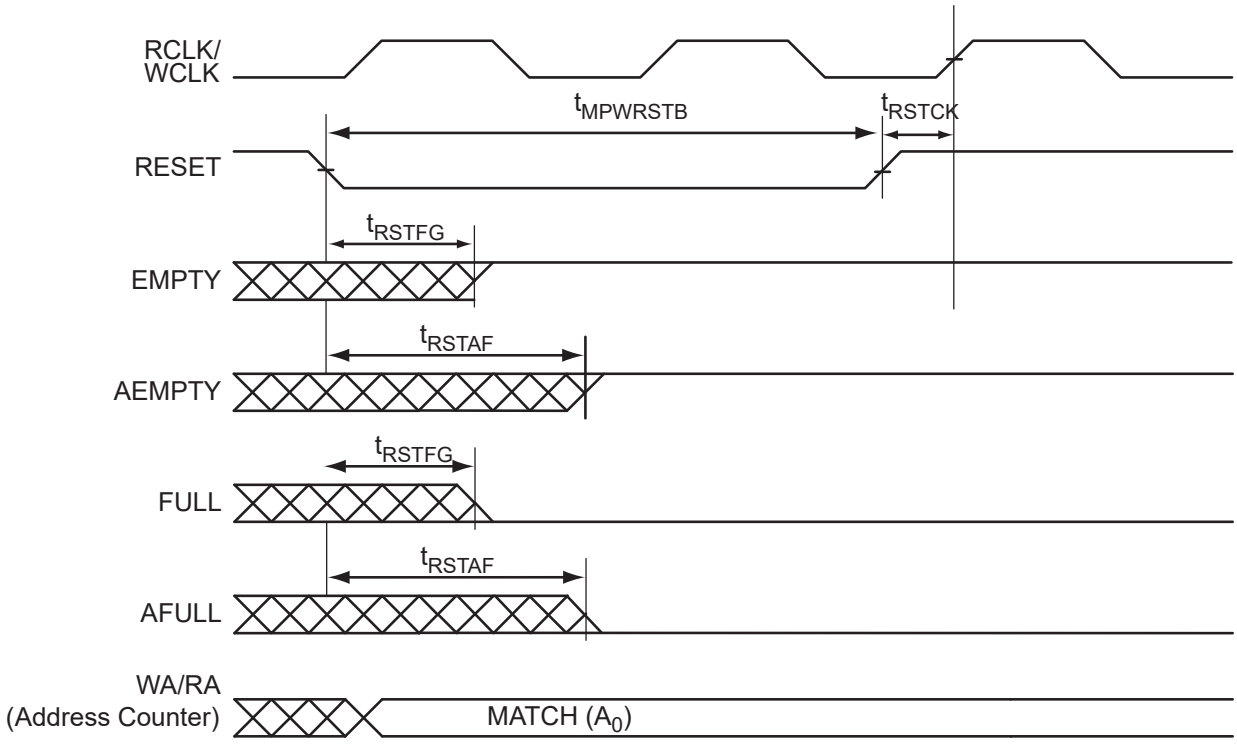

FIGURE 2-40: FIFO EMPTY FLAG AND AEMPTY FLAG ASSERTION

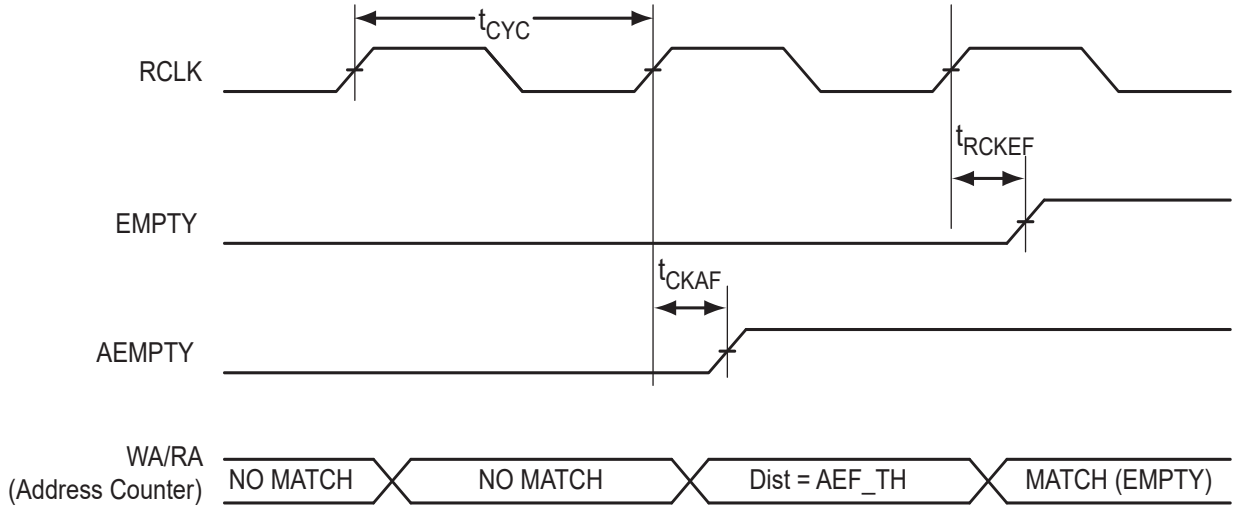

FIGURE 2-41: FIFO FULL FLAG AND AFULL FLAG ASSERTION

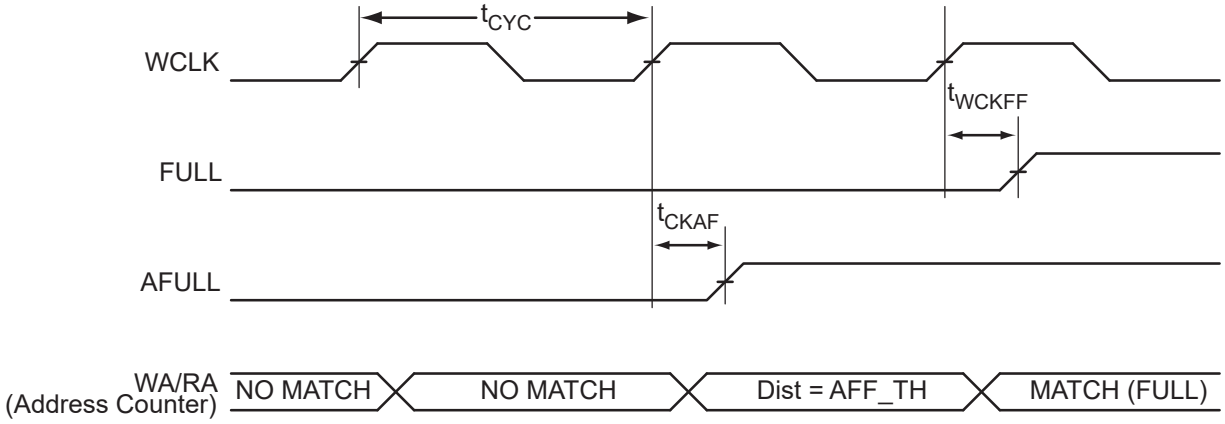

FIGURE 2-42: FIFO EMPTY FLAG AND AEMPTY FLAG DEASSERTION

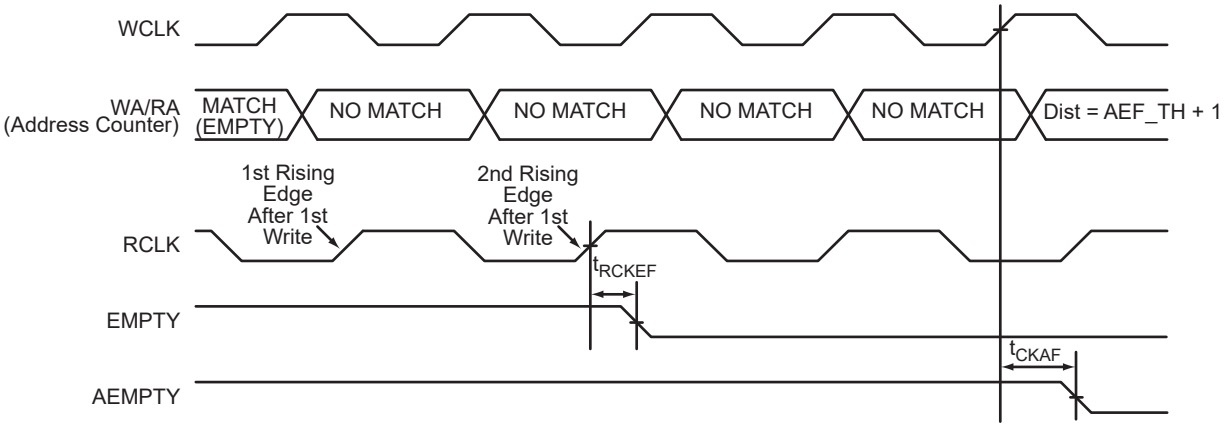

FIGURE 2-43: FIFO FULL FLAG AND AFULL FLAG DEASSERTION

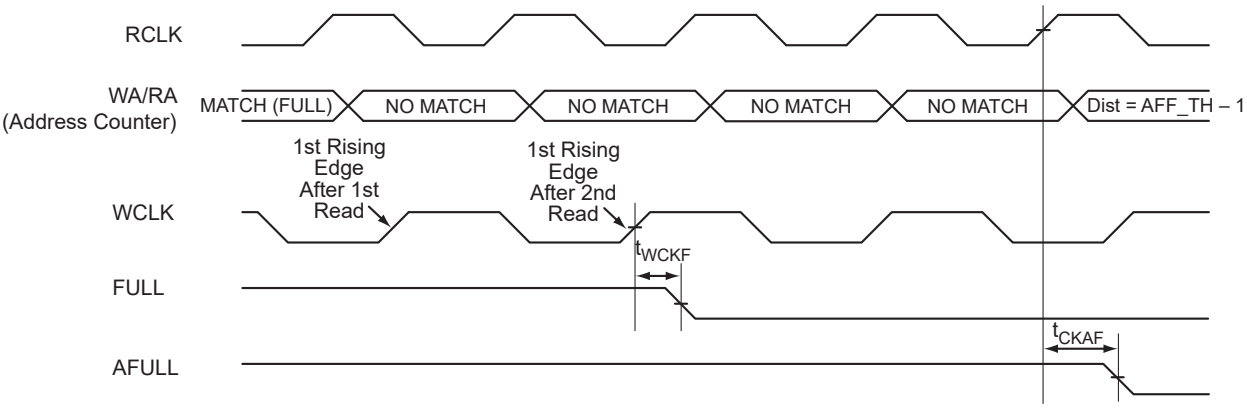

© 2023 Microchip Technology Inc. and its subsidiaries

2.7.2.2 Timing Characteristics

TABLE 2-116: FIFO (FOR ALL DIES EXCEPT A3P250) WORST COMMERCIAL-CASE CONDITIONS: T_J = 70 °C, VCC = 1.425V

Parameter	Description	–2	–1	Std.	Units
t_{ENS}	REN, WEN Setup Time	1.34	1.52	1.79	ns
t_{ENH}	REN, WEN Hold Time	0.00	0.00	0.00	ns
t_{BKS}	BLK Setup Time	0.19	0.22	0.26	ns
t_{BKH}	BLK Hold Time	0.00	0.00	0.00	ns
t_{DS}	Input Data (WD) Setup Time	0.18	0.21	0.25	ns
t_{DH}	Input Data (WD) Hold Time	0.00	0.00	0.00	ns
t_{CKQ1}	Clock High to New Data Valid on RD (flow-through)	2.17	2.47	2.90	ns
t_{CKQ2}	Clock High to New Data Valid on RD (pipelined)	0.94	1.07	1.26	ns
t_{RCKEF}	RCLK High to Empty Flag Valid	1.72	1.96	2.30	ns
t_{WCKFF}	WCLK High to Full Flag Valid	1.63	1.86	2.18	ns
t_{CKAF}	Clock High to Almost Empty/Full Flag Valid	6.19	7.05	8.29	ns
t_{RSTFG}	RESET Low to Empty/Full Flag Valid	1.69	1.93	2.27	ns
t_{RSTAF}	RESET Low to Almost Empty/Full Flag Valid	6.13	6.98	8.20	ns
t_{RSTBQ}	RESET Low to Data Out Low on RD (flow-through)	0.92	1.05	1.23	ns
	RESET Low to Data Out Low on RD (pipelined)	0.92	1.05	1.23	ns
$t_{REMRSTB}$	RESET Removal	0.29	0.33	0.38	ns
$t_{RECRSTB}$	RESET Recovery	1.50	1.71	2.01	ns
$t_{MPWRSTB}$	RESET Minimum Pulse Width	0.21	0.24	0.29	ns
t_{CYC}	Clock Cycle Time	3.23	3.68	4.32	ns
F_{MAX}	Maximum Frequency for FIFO	310	272	231	MHz

Note: For specific junction temperature and voltage supply levels, refer to Table 2-6 for derating values.

TABLE 2-117: FIFO (FOR A3P250 ONLY, ASPECT-RATIO-DEPENDENT) WORST COMMERCIAL-CASE CONDITIONS: T_J = 70 °C, VCC = 1.425V

Parameter	Description	–2	–1	Std.	Units
t_{ENS}	REN, WEN Setup Time	3.26	3.71	4.36	ns
t_{ENH}	REN, WEN Hold Time	0.00	0.00	0.00	ns
t_{BKS}	BLK Setup Time	0.19	0.22	0.26	ns
t_{BKH}	BLK Hold Time	0.00	0.00	0.00	ns
t_{DS}	Input Data (WD) Setup Time	0.18	0.21	0.25	ns
t_{DH}	Input Data (WD) Hold Time	0.00	0.00	0.00	ns
t_{CKQ1}	Clock High to New Data Valid on RD (flow-through)	2.17	2.47	2.90	ns
t_{CKQ2}	Clock High to New Data Valid on RD (pipelined)	0.94	1.07	1.26	ns
t_{RCKEF}	RCLK High to Empty Flag Valid	1.72	1.96	2.30	ns
t_{WCKFF}	WCLK High to Full Flag Valid	1.63	1.86	2.18	ns

TABLE 2-117: FIFO (FOR A3P250 ONLY, ASPECT-RATIO-DEPENDENT) WORST COMMERCIAL-CASE CONDITIONS: T_J = 70 °C, VCC = 1.425V

Parameter	Description	–2	–1	Std.	Units
t_{CKAF}	Clock High to Almost Empty/Full Flag Valid	6.19	7.05	8.29	ns
t_{RSTFG}	RESET Low to Empty/Full Flag Valid	1.69	1.93	2.27	ns
t_{RSTAF}	RESET Low to Almost Empty/Full Flag Valid	6.13	6.98	8.20	ns
t_{RSTBQ}	RESET Low to Data Out Low on RD (flow-through)	0.92	1.05	1.23	ns
	RESET Low to Data Out Low on RD (pipelined)	0.92	1.05	1.23	ns
$t_{REMRSTB}$	RESET Removal	0.29	0.33	0.38	ns
$t_{RECRSTB}$	RESET Recovery	1.50	1.71	2.01	ns
$t_{MPWRSTB}$	RESET Minimum Pulse Width	0.21	0.24	0.29	ns
t_{CYC}	Clock Cycle Time	3.23	3.68	4.32	ns
F_{MAX}	Maximum Frequency for FIFO	310	272	231	MHz

TABLE 2-118: A3P250 FIFO 512 × 8 WORST COMMERCIAL-CASE CONDITIONS: T_J = 70 °C, VCC = 1.425V

Parameter	Description	–2	–1	Std.	Units
t_{ENS}	REN, WEN Setup Time	3.75	4.27	5.02	ns
t_{ENH}	REN, WEN Hold Time	0.00	0.00	0.00	ns
t_{BKS}	BLK Setup Time	0.19	0.22	0.26	ns
t_{BKH}	BLK Hold Time	0.00	0.00	0.00	ns
t_{DS}	Input Data (WD) Setup Time	0.18	0.21	0.25	ns
t_{DH}	Input Data (WD) Hold Time	0.00	0.00	0.00	ns
t_{CKQ1}	Clock High to New Data Valid on RD (flow-through)	2.17	2.47	2.90	ns
t_{CKQ2}	Clock High to New Data Valid on RD (pipelined)	0.94	1.07	1.26	ns
t_{RCKEF}	RCLK High to Empty Flag Valid	1.72	1.96	2.30	ns
t_{WCKFF}	WCLK High to Full Flag Valid	1.63	1.86	2.18	ns
t_{CKAF}	Clock High to Almost Empty/Full Flag Valid	6.19	7.05	8.29	ns
t_{RSTFG}	RESET Low to Empty/Full Flag Valid	1.69	1.93	2.27	ns
t_{RSTAF}	RESET Low to Almost Empty/Full Flag Valid	6.13	6.98	8.20	ns
t_{RSTBQ}	RESET Low to Data Out Low on RD (flow-through)	0.92	1.05	1.23	ns
	RESET Low to Data Out Low on RD (pipelined)	0.92	1.05	1.23	ns
$t_{REMRSTB}$	RESET Removal	0.29	0.33	0.38	ns
$t_{RECRSTB}$	RESET Recovery	1.50	1.71	2.01	ns
$t_{MPWRSTB}$	RESET Minimum Pulse Width	0.21	0.24	0.29	ns
t_{CYC}	Clock Cycle Time	3.23	3.68	4.32	ns
F_{MAX}	Maximum Frequency for FIFO	310	272	231	MHz

© 2023 Microchip Technology Inc. and its subsidiaries

TABLE 2-119: A3P250 FIFO 1K×4 WORST COMMERCIAL-CASE CONDITIONS: T_J = 70 °C, VCC = 1.425V

Parameter	Description	–2	–1	Std.	Units
t_{ENS}	REN, WEN Setup Time	4.05	4.61	5.42	ns
t_{ENH}	REN, WEN Hold Time	0.00	0.00	0.00	ns
t_{BKS}	BLK Setup Time	0.19	0.22	0.26	ns
t_{BKH}	BLK Hold Time	0.00	0.00	0.00	ns
t_{DS}	Input Data (WD) Setup Time	0.18	0.21	0.25	ns
t_{DH}	Input Data (WD) Hold Time	0.00	0.00	0.00	ns
t_{CKQ1}	Clock High to New Data Valid on RD (flow-through)	2.36	2.68	3.15	ns
t_{CKQ2}	Clock High to New Data Valid on RD (pipelined)	0.89	1.02	1.20	ns
t_{RCKEF}	RCLK High to Empty Flag Valid	1.72	1.96	2.30	ns
t_{WCKFF}	WCLK High to Full Flag Valid	1.63	1.86	2.18	ns
t_{CKAF}	Clock High to Almost Empty/Full Flag Valid	6.19	7.05	8.29	ns
t_{RSTFG}	RESET Low to Empty/Full Flag Valid	1.69	1.93	2.27	ns
t_{RSTAF}	RESET Low to Almost Empty/Full Flag Valid	6.13	6.98	8.20	ns
t_{RSTBQ}	RESET Low to Data Out Low on RD (flow-through)	0.92	1.05	1.23	ns
	RESET Low to Data Out Low on RD (pipelined)	0.92	1.05	1.23	ns
$t_{REMRSTB}$	RESET Removal	0.29	0.33	0.38	ns
$t_{RECRSTB}$	RESET Recovery	1.50	1.71	2.01	ns
$t_{MPWRSTB}$	RESET Minimum Pulse Width	0.21	0.24	0.29	ns
t_{CYC}	Clock Cycle Time	3.23	3.68	4.32	ns
F_{MAX}	Maximum Frequency for FIFO	310	272	231	MHz

TABLE 2-120: A3P250 FIFO 2K×2 WORST COMMERCIAL-CASE CONDITIONS: T_J = 70 °C, VCC = 1.425V

Parameter	Description	–2	–1	Std.	Units
t_{ENS}	REN, WEN Setup Time	4.39	5.00	5.88	ns
t_{ENH}	REN, WEN Hold Time	0.00	0.00	0.00	ns
t_{BKS}	BLK Setup Time	0.19	0.22	0.26	ns
t_{BKH}	BLK Hold Time	0.00	0.00	0.00	ns
t_{DS}	Input Data (WD) Setup Time	0.18	0.21	0.25	ns
t_{DH}	Input Data (WD) Hold Time	0.00	0.00	0.00	ns
t_{CKQ1}	Clock High to New Data Valid on RD (flow-through)	2.36	2.68	3.15	ns
t_{CKQ2}	Clock High to New Data Valid on RD (pipelined)	0.89	1.02	1.20	ns
t_{RCKEF}	RCLK High to Empty Flag Valid	1.72	1.96	2.30	ns
t_{WCKFF}	WCLK High to Full Flag Valid	1.63	1.86	2.18	ns
t_{CKAF}	Clock High to Almost Empty/Full Flag Valid	6.19	7.05	8.29	ns
t_{RSTFG}	RESET Low to Empty/Full Flag Valid	1.69	1.93	2.27	ns
t_{RSTAF}	RESET Low to Almost Empty/Full Flag Valid	6.13	6.98	8.20	ns

TABLE 2-120: A3P250 FIFO 2K×2 WORST COMMERCIAL-CASE CONDITIONS: T_J = 70 °C, VCC = 1.425V

Parameter	Description	–2	–1	Std.	Units
t_{RSTBQ}	RESET Low to Data Out Low on RD (flow-through)	0.92	1.05	1.23	ns
	RESET Low to Data Out Low on RD (pipelined)	0.92	1.05	1.23	ns
$t_{REMRSTB}$	RESET Removal	0.29	0.33	0.38	ns
$t_{RECRSTB}$	RESET Recovery	1.50	1.71	2.01	ns
$t_{MPWRSTB}$	RESET Minimum Pulse Width	0.21	0.24	0.29	ns
t_{CYC}	Clock Cycle Time	3.23	3.68	4.32	ns
F_{MAX}	Maximum Frequency for FIFO	310	272	231	MHz

TABLE 2-121: A3P250 FIFO 4K×1 WORST COMMERCIAL-CASE CONDITIONS: T_J = 70 °C, VCC = 1.425 V

Parameter	Description	–2	–1	Std.	Units
t_{ENS}	REN, WEN Setup Time	4.86	5.53	6.50	ns
t_{ENH}	REN, WEN Hold Time	0.00	0.00	0.00	ns
t_{BKS}	BLK Setup Time	0.19	0.22	0.26	ns
t_{BKH}	BLK Hold Time	0.00	0.00	0.00	ns
t_{DS}	Input Data (WD) Setup Time	0.18	0.21	0.25	ns
t_{DH}	Input Data (WD) Hold Time	0.00	0.00	0.00	ns
t_{CKQ1}	Clock High to New Data Valid on RD (flow-through)	2.36	2.68	3.15	ns
t_{CKQ2}	Clock High to New Data Valid on RD (pipelined)	0.89	1.02	1.20	ns
t_{RCKEF}	RCLK High to Empty Flag Valid	1.72	1.96	2.30	ns
t_{WCKFF}	WCLK High to Full Flag Valid	1.63	1.86	2.18	ns
t_{CKAF}	Clock High to Almost Empty/Full Flag Valid	6.19	7.05	8.29	ns
t_{RSTFG}	RESET Low to Empty/Full Flag Valid	1.69	1.93	2.27	ns
t_{RSTAF}	RESET Low to Almost Empty/Full Flag Valid	6.13	6.98	8.20	ns
t_{RSTBQ}	RESET Low to Data Out Low on DO (pass-through)	0.92	1.05	1.23	ns
	RESET Low to Data Out Low on DO (pipelined)	0.92	1.05	1.23	ns
$t_{REMRSTB}$	RESET Removal	0.29	0.33	0.38	ns
$t_{RECRSTB}$	RESET Recovery	1.50	1.71	2.01	ns
$t_{MPWRSTB}$	RESET Minimum Pulse Width	0.21	0.24	0.29	ns
t_{CYC}	Clock Cycle Time	3.23	3.68	4.32	ns
F_{MAX}	Maximum Frequency	310	272	231	MHz

© 2023 Microchip Technology Inc. and its subsidiaries

2.8 Embedded FlashROM Characteristics

FIGURE 2-44: TIMING DIAGRAM

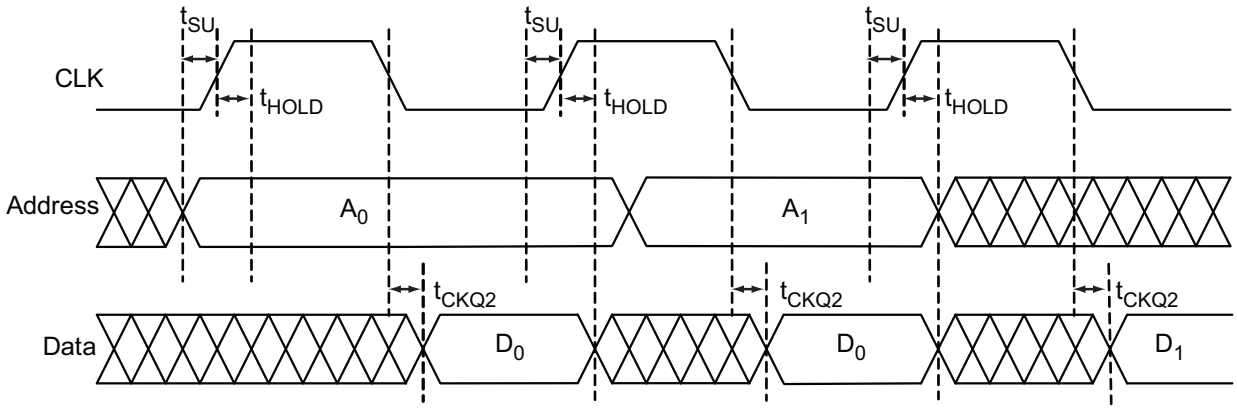

2.8.1 TIMING CHARACTERISTICS

TABLE 2-122: EMBEDDED FLASHROM ACCESS TIME

Parameter	Description	–2	–1	Std.	Units
t_{SU}	Address Setup Time	0.53	0.61	0.71	ns
t_{HOLD}	Address Hold Time	0.00	0.00	0.00	ns
t_{CK2Q}	Clock to Out	21.42	24.40	28.68	ns
F_{MAX}	Maximum Clock Frequency	15	15	15	MHz

2.9 JTAG 1532 Characteristics

JTAG timing delays do not include JTAG I/Os. To obtain complete JTAG timing, add I/O buffer delays to the corresponding standard selected; refer to the I/O timing characteristics in the Section 2.3 User I/O Characteristics for more details.

2.9.1 TIMING CHARACTERISTICS

TABLE 2-123: JTAG 1532 COMMERCIAL-CASE CONDITIONS: T_J = 70 °C, WORST-CASE VCC = 1.425V

Parameter	Description	–2	–1	Std.	Units
t_{DISU}	Test Data Input Setup Time	0.50	0.57	0.67	ns
t_{DIHD}	Test Data Input Hold Time	1.00	1.13	1.33	ns
t_{TMSSU}	Test Mode Select Setup Time	0.50	0.57	0.67	ns
t_{TMDHD}	Test Mode Select Hold Time	1.00	1.13	1.33	ns
t_{TCK2Q}	Clock to Q (data out)	6.00	6.80	8.00	ns
t_{RSTB2Q}	Reset to Q (data out)	20.00	22.67	26.67	ns
F_{TCKMAX}	TCK Maximum Frequency	25.00	22.00	19.00	MHz
$t_{TRSTREM}$	ResetB Removal Time	0.00	0.00	0.00	ns
$t_{TRSTREC}$	ResetB Recovery Time	0.20	0.23	0.27	ns
$t_{TRSTMPW}$	ResetB Minimum Pulse	TBD	TBD	TBD	ns

Note: For specific junction temperature and voltage supply levels, refer to Table 2-6 for derating values.

3.0 PIN DESCRIPTIONS

3.1 Supply Pins

3.1.1 GND GROUND

Ground supply voltage to the core, I/O outputs, and I/O logic.

3.1.2 GNDQ GROUND (QUIET)

Quiet ground supply voltage to input buffers of I/O banks. Within the package, the GNDQ plane is decoupled from the simultaneous switching noise originated from the output buffer ground domain. This minimizes the noise transfer within the package and improves input signal integrity. GNDQ must always be connected to GND on the board.

3.1.3 VCC CORE SUPPLY VOLTAGE

Supply voltage to the FPGA core, nominally 1.5V. VCC is required for powering the JTAG state machine in addition to VJTAG. Even when a device is in bypass mode in a JTAG chain of interconnected devices, both VCC and VJTAG must remain powered to allow JTAG signals to pass through the device.

3.1.4 VCCIBX I/O SUPPLY VOLTAGE

Supply voltage to the bank's I/O output buffers and I/O logic. Bx is the I/O bank number. There are up to eight I/O banks on low power flash devices plus a dedicated VJTAG bank. Each bank can have a separate VCCI connection. All I/Os in a bank will run off the same VCCIBx supply. VCCI can be 1.5V, 1.8V, 2.5V, or 3.3V, nominal voltage. In general, unused I/O banks should have their corresponding VCCIX pins tied to GND. If an output pad is terminated to ground through any resistor and if the corresponding VCCIX is left floating, then the leakage current to ground is ~ 0uA. However, if an output pad is terminated to ground through any resistor and the corresponding VCCIX grounded, then the leakage current to ground is ~ 3 uA. For unused banks the aforementioned behavior is to be taken into account while deciding if it’s better to float VCCIX of unused bank or tie it to GND.

3.1.5 VMVX I/O SUPPLY VOLTAGE (QUIET)

Quiet supply voltage to the input buffers of each I/O bank. *x* is the bank number. Within the package, the VMV plane biases the input stage of the I/Os in the I/O banks. This minimizes the noise transfer within the package and improves input signal integrity. Each bank must have at least one VMV connection, and no VMV should be left unconnected. All I/Os in a bank run off the same VMVx supply. VMV is used to provide a quiet supply voltage to the input buffers of each I/O bank. VMVx can be 1.5V, 1.8V, 2.5V, or 3.3V, nominal voltage. Unused I/O banks should have their corresponding VMV pins tied to GND. VMV and VCCI should be at the same voltage within a given I/O bank. Used VMV pins must be connected to the corresponding VCCI pins of the same bank (i.e., VMV0 to VCCIB0, VMV1 to VCCIB1, etc.).

3.1.6 VCCPLA/B/C/D/E/F PLL SUPPLY VOLTAGE

Supply voltage to analog PLL, nominally 1.5V.

When the PLLs are not used, the Designer place-and-route tool automatically disables the unused PLLs to lower power consumption. The user should tie unused VCCPLx and VCOMPLx pins to ground. Microchip recommends tying VCCPLx to VCC and using proper filtering circuits to decouple VCC noise from the PLLs. Refer to the PLL Power Supply Decoupling section of the "Clock Conditioning Circuits in IGLOO and ProASIC 3 Devices" chapter of the *ProASIC 3 FPGA Fabric User’s Guide* for a complete board solution for the PLL analog power supply and ground.

There is one VCCPLF pin on ProASIC 3 devices.

3.1.7 VCOMPLA/B/C/D/E/F PLL GROUND

Ground to analog PLL power supplies. When the PLLs are not used, the Designer place-and-route tool automatically disables the unused PLLs to lower power consumption. The user should tie unused VCCPLx and VCOMPLx pins to ground.

There is one VCOMPLF pin on ProASIC 3 devices.

3.1.8 VJTAG JTAG SUPPLY VOLTAGE

Low power flash devices have a separate bank for the dedicated JTAG pins. The JTAG pins can be run at any voltage from 1.5V to 3.3V (nominal). Isolating the JTAG power supply in a separate I/O bank gives greater flexibility in supply selection and simplifies power supply and PCB design.

© 2023 Microchip Technology Inc. and its subsidiaries

If the JTAG interface is neither used nor planned for use, the VJTAG pin together with the TRST pin could be tied to GND.

It should be noted that VCC is required to be powered for JTAG operation; VJTAG alone is insufficient. If a device is in a JTAG chain of interconnected boards, the board containing the device can be powered down, provided both VJTAG and VCC to the part remain powered; otherwise, JTAG signals will not be able to transition the device, even in bypass mode.

Microchip recommends that VPUMP and VJTAG power supplies be kept separate with independent filtering capacitors rather than supplying them from a common rail.

3.1.9 VPUMP PROGRAMMING SUPPLY VOLTAGE

ProASIC 3 devices support single-voltage ISP of the configuration flash and FlashROM. For programming, VPUMP should be 3.3V nominal. During normal device operation, VPUMP can be left floating or can be tied (pulled up) to any voltage between 0V and the VPUMP maximum. Programming power supply voltage (VPUMP) range is listed in Table 2-2.

When the VPUMP pin is tied to ground, it will shut off the charge pump circuitry, resulting in no sources of oscillation from the charge pump circuitry.

For proper programming, 0.01 µF and 0.33 µF capacitors (both rated at 16 V) are to be connected in parallel across VPUMP and GND, and positioned as close to the FPGA pins as possible.

Microchip recommends that VPUMP and VJTAG power supplies be kept separate with independent filtering capacitors rather than supplying them from a common rail.

3.2 User Pins

3.2.1 I/O USER INPUT/OUTPUT

The I/O pin functions as an input, output, tristate, or bidirectional buffer. Input and output signal levels are compatible with the I/O standard selected.

During programming, I/Os become tristated and weakly pulled up to V_{CCI}. With V_{CCI}, VMV, and V_{CC} supplies continuously powered up, when the device transitions from programming to operating mode, the I/Os are instantly configured to the desired user configuration.

Unused I/Os are configured as follows:

- Output buffer is disabled (with tristate value of high impedance)
- Input buffer is disabled (with tristate value of high impedance)
- Weak pull-up is programmed

3.2.2 GL GLOBALS

GL I/Os have access to certain clock conditioning circuitry (and the PLL) and/or have direct access to the global network (spines). Additionally, the global I/Os can be used as regular I/Os, since they have identical capabilities. Unused GL pins are configured as inputs with pull-up resistors.

See more detailed descriptions of global I/O connectivity in the "Clock Conditioning Circuits in IGLOO and ProASIC 3 Devices" chapter of the *ProASIC 3 FPGA Fabric User's Guide*. All inputs labeled GC/GF are direct inputs into the quadrant clocks. For example, if GAA0 is used for an input, GAA1 and GAA2 are no longer available for input to the quadrant globals. All inputs labeled GC/GF are direct inputs into the chip-level globals, and the rest are connected to the quadrant globals. The inputs to the global network are multiplexed, and only one input can be used as a global input.

Refer to the I/O Structure section of the handbook for the device you are using for an explanation of the naming of global pins.

3.2.3 FF FLASH*FREEZE MODE ACTIVATION PIN

Flash*Freeze is available on IGLOO, ProASIC 3L, and RT ProASIC 3 devices. It is not supported on ProASIC 3/E devices. The FF pin is a dedicated input pin used to enter and exit Flash*Freeze mode. The FF pin is active-low, has the same characteristics as a single-ended I/O, and must meet the maximum rise and fall times. When Flash*Freeze mode is not used in the design, the FF pin is available as a regular I/O. For IGLOOe, ProASIC 3EL, and RT ProASIC 3 only, the FF pin can be configured as a Schmitt trigger input.

When Flash*Freeze mode is used, the FF pin must not be left floating to avoid accidentally entering Flash*Freeze mode. While in Flash*Freeze mode, the Flash*Freeze pin should be constantly asserted.

The Flash*Freeze pin can be used with any single-ended I/O standard supported by the I/O bank in which the pin is located, and input signal levels compatible with the I/O standard selected. The FF pin should be treated as a sensitive asynchronous signal. When defining pin placement and board layout, simultaneously switching outputs (SSOs) and their effects on sensitive asynchronous pins must be considered.

Unused FF or I/O pins are tristated with weak pull-up. This default configuration applies to both Flash*Freeze mode and normal operation mode. No user intervention is required.

3.3 JTAG Pins

Low power flash devices have a separate bank for the dedicated JTAG pins. The JTAG pins can be run at any voltage from 1.5V to 3.3V (nominal). VCC must also be powered for the JTAG state machine to operate, even if the device is in bypass mode; VJTAG alone is insufficient. Both VJTAG and VCC to the part must be supplied to allow JTAG signals to transition the device. Isolating the JTAG power supply in a separate I/O bank gives greater flexibility in supply selection and simplifies power supply and PCB design. If the JTAG interface is neither used nor planned for use, the VJTAG pin together with the TRST pin could be tied to GND.

3.3.1 TCK TEST CLOCK

Test clock input for JTAG boundary scan, ISP, and UJTAG. The TCK pin does not have an internal pull-up/-down resistor. If JTAG is not used, Microchip recommends tying off TCK to GND through a resistor placed close to the FPGA pin. This prevents JTAG operation in case TMS enters an undesired state.

Note that to operate at all VJTAG voltages, 500Ω to 1 kΩ will satisfy the requirements. Refer to Table 3-1 for more information.

TABLE 3-1: **RECOMMENDED TIE-OFF VALUES FOR THE TCK AND TRST PINS**

VJTAG	Tie-Off Resistance
3.3V	200Ω –1 kΩ
2.5V	200Ω –1 kΩ
1.8V	500Ω –1 kΩ
1.5V	500Ω –1 kΩ

Note 1: Equivalent parallel resistance if more than one device is on the JTAG chain
2: The TCK pin can be pulled up/down.
3: The TRST pin is pulled down.

3.3.2 TDI TEST DATA INPUT

Serial input for JTAG boundary scan, ISP, and UJTAG usage. There is an internal weak pull-up resistor on the TDI pin.

3.3.3 TDO TEST DATA OUTPUT

Serial output for JTAG boundary scan, ISP, and UJTAG usage.

3.3.4 TMS TEST MODE SELECT

The TMS pin controls the use of the IEEE 1532 boundary scan pins (TCK, TDI, TDO, TRST). There is an internal weak pull-up resistor on the TMS pin.

3.3.5 TRST BOUNDARY SCAN RESET PIN

The TRST pin functions as an active low input to asynchronously initialize (or reset) the boundary scan circuitry. There is an internal weak pull-up resistor on the TRST pin. If JTAG is not used, an external pull-down resistor could be included to ensure the test access port (TAP) is held in reset mode. The resistor values must be chosen from Table 3-1 and must satisfy the parallel resistance value requirement. The values in Table 3-1 correspond to the resistor recommended when a single device is used, and the equivalent parallel resistor when multiple devices are connected via a JTAG chain.

In critical applications, an upset in the JTAG circuit could allow entrance to an undesired JTAG state. In such cases, Microchip recommends tying off TRST to GND through a resistor placed close to the FPGA pin.

Note that to operate at all VJTAG voltages, 500Ω to 1 kΩ will satisfy the requirements.

© 2023 Microchip Technology Inc. and its subsidiaries

3.4 Special Function Pins

3.4.1 NC NO CONNECT

This pin is not connected to circuitry within the device. These pins can be driven to any voltage or can be left floating with no effect on the operation of the device.

3.4.2 DC DO NOT CONNECT

This pin should not be connected to any signals on the PCB. These pins should be left unconnected.

3.5 Related Documents

3.5.1 USER'S GUIDES

ProASIC FPGA Fabric User's Guide

https://ww1.microchip.com/downloads/aemDocuments/documents/FPGA/ProductDocuments/UserGuides/pa3_ug.pdf

3.5.2 PACKAGING

The following documents provide packaging information and device selection for low power flash devices.

3.5.2.1 *Product Catalog*

https://ww1.microchip.com/downloads/aemDocuments/documents/FPGA/ProductDocuments/Brochures/igloo_lowpower_flash_fpgas_brochure.pdf

Lists devices currently recommended for new designs and the packages available for each member of the family. Use this document or the datasheet tables to determine the best package for your design, and which package drawing to use.

3.5.3 PACKAGE MECHANICAL DRAWINGS

https://ww1.microchip.com/downloads/aemDocuments/documents/FPGA/ProductDocuments/PackagingSpecifications/PD3068-Package_Mechanical_Drawings_Datasheet_V62.pdf

This document contains the package mechanical drawings for all packages currently or previously supplied by Actel. Use the bookmarks to navigate to the package mechanical drawings.

4.0 PACKAGE PIN ASSIGNMENTS

4.1 QN48

FIGURE 4-1 **• QN48—BOTTOM VIEW**

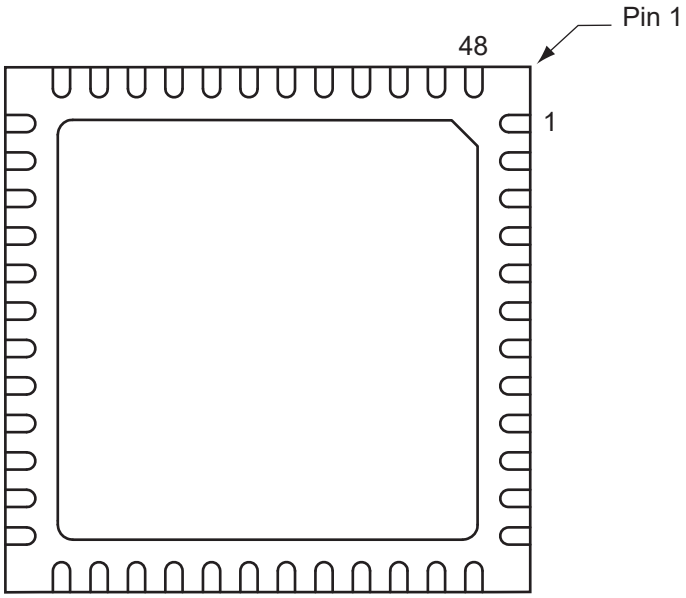

Note: For more information on package drawings, see PD3068: Package Mechanical Drawings.

© 2023 Microchip Technology Inc. and its subsidiaries

QN48	
Pin Number	**A3P030 Function**
1	IO82RSB1
2	GEC0/IO73RSB1
3	GEA0/IO72RSB1
4	GEB0/IO71RSB1
5	GND
6	VCCIB1
7	IO68RSB1
8	IO67RSB1
9	IO66RSB1
10	IO65RSB1
11	IO64RSB1
12	IO62RSB1
13	IO61RSB1
14	IO60RSB1
15	IO57RSB1
16	IO55RSB1
17	IO53RSB1
18	VCC
19	VCCIB1
20	IO46RSB1
21	IO42RSB1
22	TCK
23	TDI
24	TMS
25	VPUMP
26	TDO
27	TRST
28	VJTAG
29	IO38RSB0
30	GDB0/IO34RSB0
31	GDA0/IO33RSB0
32	GDC0/IO32RSB0
33	VCCIB0
34	GND
35	VCC
36	IO25RSB0

QN48	
Pin Number	**A3P030 Function**
37	IO24RSB0
38	IO22RSB0
39	IO20RSB0
40	IO18RSB0
41	IO16RSB0
42	IO14RSB0
43	IO10RSB0
44	IO08RSB0
45	IO06RSB0
46	IO04RSB0
47	IO02RSB0
48	IO00RSB0

© 2023 Microchip Technology Inc. and its subsidiaries

4.2 QN68

***FIGURE 4-2* • QN68—BOTTOM VIEW**

Note: .

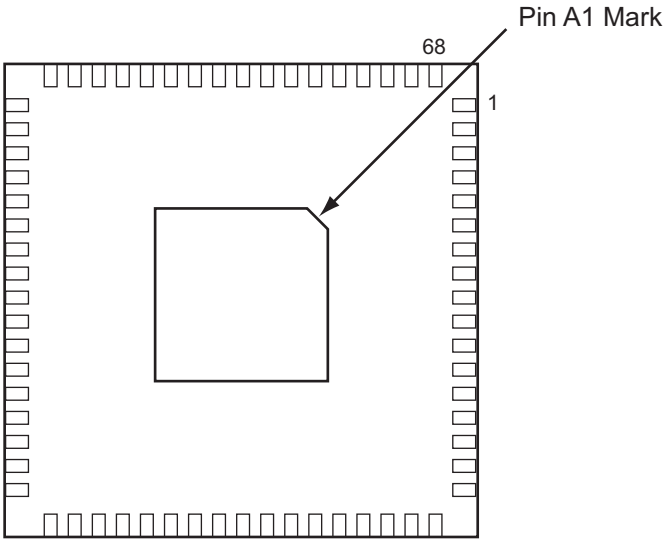

Note: For more information on package drawings, see PD3068: Package Mechanical Drawings.

© 2023 Microchip Technology Inc. and its subsidiaries

QN68	
Pin Number	**A3P030 Function**
1	IO82RSB1
2	IO80RSB1
3	IO78RSB1
4	IO76RSB1
5	GEC0/IO73RSB1
6	GEA0/IO72RSB1
7	GEB0/IO71RSB1
8	VCC
9	GND
10	VCCIB1
11	IO68RSB1
12	IO67RSB1
13	IO66RSB1
14	IO65RSB1
15	IO64RSB1
16	IO63RSB1
17	IO62RSB1
18	IO60RSB1
19	IO58RSB1
20	IO56RSB1
21	IO54RSB1
22	IO52RSB1
23	IO51RSB1
24	VCC
25	GND
26	VCCIB1
27	IO50RSB1
28	IO48RSB1
29	IO46RSB1
30	IO44RSB1
31	IO42RSB1
32	TCK
33	TDI
34	TMS
35	VPUMP
36	TDO

QN68	
Pin Number	**A3P030 Function**
37	TRST
38	VJTAG
39	IO40RSB0
40	IO37RSB0
41	GDB0/IO34RSB0
42	GDA0/IO33RSB0
43	GDC0/IO32RSB0
44	VCCIB0
45	GND
46	VCC
47	IO31RSB0
48	IO29RSB0
49	IO28RSB0
50	IO27RSB0
51	IO25RSB0
52	IO24RSB0
53	IO22RSB0
54	IO21RSB0
55	IO19RSB0
56	IO17RSB0
57	IO15RSB0
58	IO14RSB0
59	VCCIB0
60	GND
61	VCC
62	IO12RSB0
63	IO10RSB0
64	IO08RSB0
65	IO06RSB0
66	IO04RSB0
67	IO02RSB0
68	IO00RSB0

© 2023 Microchip Technology Inc. and its subsidiaries

4.3 QN132

***FIGURE 4-3* • QN132—BOTTOM VIEW**

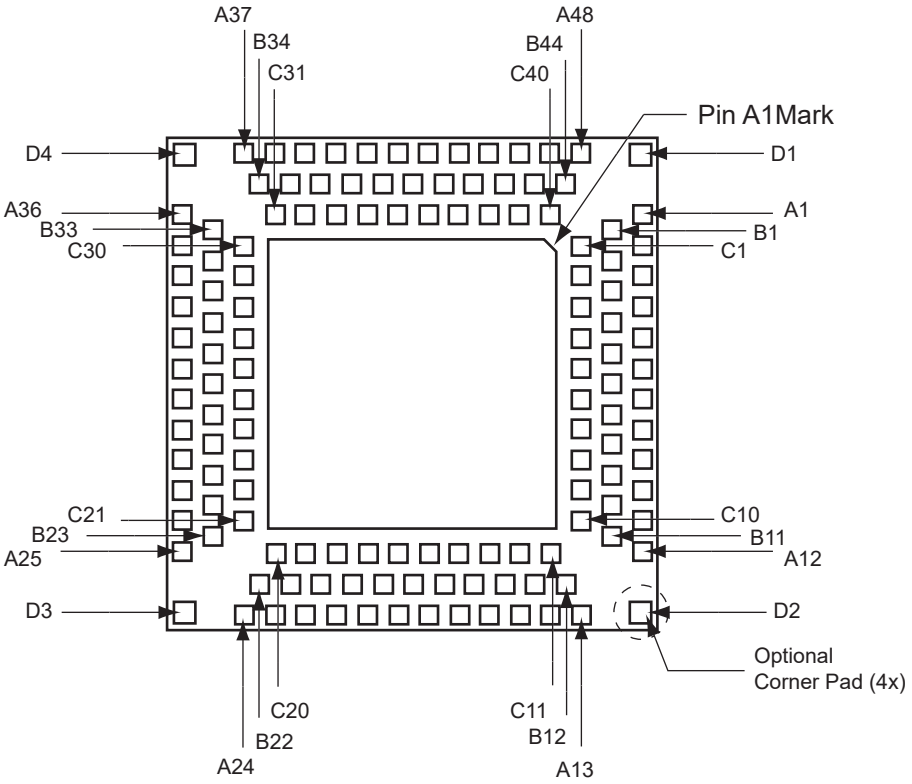

Note 1: The die attach paddle center of the package is tied to ground (GND).

2: Option corner pads come with this device and package combination. It is optional to tie them to ground or leave them floating.

3: The QN132 package is discontinued and is not available for ProASIC 3 devices.

4: For more information on package drawings, see PD3068: Package Mechanical Drawings.

© 2023 Microchip Technology Inc. and its subsidiaries

QN132	
Pin Number	A3P030 Function
A1	IO01RSB1
A2	IO81RSB1
A3	NC
A4	IO80RSB1
A5	GEC0/IO77RSB1
A6	NC
A7	GEB0/IO75RSB1
A8	IO73RSB1
A9	NC
A10	VCC
A11	IO71RSB1
A12	IO68RSB1
A13	IO63RSB1
A14	IO60RSB1
A15	NC
A16	IO59RSB1
A17	IO57RSB1
A18	VCC
A19	IO54RSB1
A20	IO52RSB1
A21	IO49RSB1
A22	IO48RSB1
A23	IO47RSB1
A24	TDI
A25	TRST
A26	IO44RSB0
A27	NC
A28	IO43RSB0
A29	IO42RSB0
A30	IO40RSB0
A31	IO39RSB0
A32	GDC0/IO36RSB0
A33	NC
A34	VCC
A35	IO34RSB0
A36	IO31RSB0

QN132	
Pin Number	A3P030 Function
A37	IO26RSB0
A38	IO23RSB0
A39	NC
A40	IO22RSB0
A41	IO20RSB0
A42	IO18RSB0
A43	VCC
A44	IO15RSB0
A45	IO12RSB0
A46	IO10RSB0
A47	IO09RSB0
A48	IO06RSB0
B1	IO02RSB1
B2	IO82RSB1
B3	GND
B4	IO79RSB1
B5	NC
B6	GND
B7	IO74RSB1
B8	NC
B9	GND
B10	IO70RSB1
B11	IO67RSB1
B12	IO64RSB1
B13	IO61RSB1
B14	GND
B15	IO58RSB1
B16	IO56RSB1
B17	GND
B18	IO53RSB1
B19	IO50RSB1
B20	GND
B21	IO46RSB1
B22	TMS
B23	TDO
B24	IO45RSB0

QN132	
Pin Number	A3P030 Function
B25	GND
B26	NC
B27	IO41RSB0
B28	GND
B29	GDA0/IO37RSB0
B30	NC
B31	GND
B32	IO33RSB0
B33	IO30RSB0
B34	IO27RSB0
B35	IO24RSB0
B36	GND
B37	IO21RSB0
B38	IO19RSB0
B39	GND
B40	IO16RSB0
B41	IO13RSB0
B42	GND
B43	IO08RSB0
B44	IO05RSB0
C1	IO03RSB1
C2	IO00RSB1
C3	NC
C4	IO78RSB1
C5	GEA0/IO76RSB1
C6	NC
C7	NC
C8	VCCIB1
C9	IO69RSB1
C10	IO66RSB1
C11	IO65RSB1
C12	IO62RSB1
C13	NC
C14	NC
C15	IO55RSB1
C16	VCCIB1

© 2023 Microchip Technology Inc. and its subsidiaries

QN132	
Pin Number	**A3P030 Function**
C17	IO51RSB1
C18	NC
C19	TCK
C20	NC
C21	VPUMP
C22	VJTAG
C23	NC
C24	NC
C25	NC
C26	GDB0/IO38RSB0
C27	NC
C28	VCCIB0
C29	IO32RSB0
C30	IO29RSB0
C31	IO28RSB0
C32	IO25RSB0
C33	NC
C34	NC
C35	VCCIB0
C36	IO17RSB0
C37	IO14RSB0
C38	IO11RSB0
C39	IO07RSB0
C40	IO04RSB0
D1	GND
D2	GND
D3	GND
D4	GND

© 2023 Microchip Technology Inc. and its subsidiaries

QN132	
Pin Number	A3P060 Function
A1	GAB2/IO00RSB1
A2	IO93RSB1
A3	VCCIB1
A4	GFC1/IO89RSB1
A5	GFB0/IO86RSB1
A6	VCCPLF
A7	GFA1/IO84RSB1
A8	GFC2/IO81RSB1
A9	IO78RSB1
A10	VCC
A11	GEB1/IO75RSB1
A12	GEA0/IO72RSB1
A13	GEC2/IO69RSB1
A14	IO65RSB1
A15	VCC
A16	IO64RSB1
A17	IO63RSB1
A18	IO62RSB1
A19	IO61RSB1
A20	IO58RSB1
A21	GDB2/IO55RSB1
A22	NC
A23	GDA2/IO54RSB1
A24	TDI
A25	TRST
A26	GDC1/IO48RSB0
A27	VCC
A28	IO47RSB0
A29	GCC2/IO46RSB0
A30	GCA2/IO44RSB0
A31	GCA0/IO43RSB0
A32	GCB1/IO40RSB0
A33	IO36RSB0
A34	VCC
A35	IO31RSB0
A36	GBA2/IO28RSB0

QN132	
Pin Number	A3P060 Function
A37	GBB1/IO25RSB0
A38	GBC0/IO22RSB0
A39	VCCIB0
A40	IO21RSB0
A41	IO18RSB0
A42	IO15RSB0
A43	IO14RSB0
A44	IO11RSB0
A45	GAB1/IO08RSB0
A46	NC
A47	GAB0/IO07RSB0
A48	IO04RSB0
B1	IO01RSB1
B2	GAC2/IO94RSB1
B3	GND
B4	GFC0/IO88RSB1
B5	VCOMPLF
B6	GND
B7	GFB2/IO82RSB1
B8	IO79RSB1
B9	GND
B10	GEB0/IO74RSB1
B11	VMV1
B12	GEB2/IO70RSB1
B13	IO67RSB1
B14	GND
B15	NC
B16	NC
B17	GND
B18	IO59RSB1
B19	GDC2/IO56RSB1
B20	GND
B21	GNDQ
B22	TMS
B23	TDO
B24	GDC0/IO49RSB0

QN132	
Pin Number	A3P060 Function
B25	GND
B26	NC
B27	GCB2/IO45RSB0
B28	GND
B29	GCB0/IO41RSB0
B30	GCC1/IO38RSB0
B31	GND
B32	GBB2/IO30RSB0
B33	VMV0
B34	GBA0/IO26RSB0
B35	GBC1/IO23RSB0
B36	GND
B37	IO20RSB0
B38	IO17RSB0
B39	GND
B40	IO12RSB0
B41	GAC0/IO09RSB0
B42	GND
B43	GAA1/IO06RSB0
B44	GNDQ
C1	GAA2/IO02RSB1
C2	IO95RSB1
C3	VCC
C4	GFB1/IO87RSB1
C5	GFA0/IO85RSB1
C6	GFA2/IO83RSB1
C7	IO80RSB1
C8	VCCIB1
C9	GEA1/IO73RSB1
C10	GNDQ
C11	GEA2/IO71RSB1
C12	IO68RSB1
C13	VCCIB1
C14	NC
C15	NC
C16	IO60RSB1

© 2023 Microchip Technology Inc. and its subsidiaries

QN132	
Pin Number	**A3P060 Function**
C17	IO57RSB1
C18	NC
C19	TCK
C20	VMV1
C21	VPUMP
C22	VJTAG
C23	VCCIB0
C24	NC
C25	NC
C26	GCA1/IO42RSB0
C27	GCC0/IO39RSB0
C28	VCCIB0
C29	IO29RSB0
C30	GNDQ
C31	GBA1/IO27RSB0
C32	GBB0/IO24RSB0
C33	VCC
C34	IO19RSB0
C35	IO16RSB0
C36	IO13RSB0
C37	GAC1/IO10RSB0
C38	NC
C39	GAA0/IO05RSB0
C40	VMV0
D1	GND
D2	GND
D3	GND
D4	GND

© 2023 Microchip Technology Inc. and its subsidiaries

QN132	
Pin Number	A3P125 Function
A1	GAB2/IO69RSB1
A2	IO130RSB1
A3	VCCIB1
A4	GFC1/IO126RSB1
A5	GFB0/IO123RSB1
A6	VCCPLF
A7	GFA1/IO121RSB1
A8	GFC2/IO118RSB1
A9	IO115RSB1
A10	VCC
A11	GEB1/IO110RSB1
A12	GEA0/IO107RSB1
A13	GEC2/IO104RSB1
A14	IO100RSB1
A15	VCC
A16	IO99RSB1
A17	IO96RSB1
A18	IO94RSB1
A19	IO91RSB1
A20	IO85RSB1
A21	IO79RSB1
A22	VCC
A23	GDB2/IO71RSB1
A24	TDI
A25	TRST
A26	GDC1/IO61RSB0
A27	VCC
A28	IO60RSB0
A29	GCC2/IO59RSB0
A30	GCA2/IO57RSB0
A31	GCA0/IO56RSB0
A32	GCB1/IO53RSB0
A33	IO49RSB0
A34	VCC
A35	IO44RSB0
A36	GBA2/IO41RSB0

QN132	
Pin Number	A3P125 Function
A37	GBB1/IO38RSB0
A38	GBC0/IO35RSB0
A39	VCCIB0
A40	IO28RSB0
A41	IO22RSB0
A42	IO18RSB0
A43	IO14RSB0
A44	IO11RSB0
A45	IO07RSB0
A46	VCC
A47	GAC1/IO05RSB0
A48	GAB0/IO02RSB0
B1	IO68RSB1
B2	GAC2/IO131RSB1
B3	GND
B4	GFC0/IO125RSB1
B5	VCOMPLF
B6	GND
B7	GFB2/IO119RSB1
B8	IO116RSB1
B9	GND
B10	GEB0/IO109RSB1
B11	VMV1
B12	GEB2/IO105RSB1
B13	IO101RSB1
B14	GND
B15	IO98RSB1
B16	IO95RSB1
B17	GND
B18	IO87RSB1
B19	IO81RSB1
B20	GND
B21	GNDQ
B22	TMS
B23	TDO
B24	GDC0/IO62RSB0

QN132	
Pin Number	A3P125 Function
B25	GND
B26	NC
B27	GCB2/IO58RSB0
B28	GND
B29	GCB0/IO54RSB0
B30	GCC1/IO51RSB0
B31	GND
B32	GBB2/IO43RSB0
B33	VMV0
B34	GBA0/IO39RSB0
B35	GBC1/IO36RSB0
B36	GND
B37	IO26RSB0
B38	IO21RSB0
B39	GND
B40	IO13RSB0
B41	IO08RSB0
B42	GND
B43	GAC0/IO04RSB0
B44	GNDQ
C1	GAA2/IO67RSB1
C2	IO132RSB1
C3	VCC
C4	GFB1/IO124RSB1
C5	GFA0/IO122RSB1
C6	GFA2/IO120RSB1
C7	IO117RSB1
C8	VCCIB1
C9	GEA1/IO108RSB1
C10	GNDQ
C11	GEA2/IO106RSB1
C12	IO103RSB1
C13	VCCIB1
C14	IO97RSB1
C15	IO93RSB1
C16	IO89RSB1

© 2023 Microchip Technology Inc. and its subsidiaries

QN132	
Pin Number	**A3P125 Function**
C17	IO83RSB1
C18	VCCIB1
C19	TCK
C20	VMV1
C21	VPUMP
C22	VJTAG
C23	VCCIB0
C24	NC
C25	NC
C26	GCA1/IO55RSB0
C27	GCC0/IO52RSB0
C28	VCCIB0
C29	IO42RSB0
C30	GNDQ
C31	GBA1/IO40RSB0
C32	GBB0/IO37RSB0
C33	VCC
C34	IO24RSB0
C35	IO19RSB0
C36	IO16RSB0
C37	IO10RSB0
C38	VCCIB0
C39	GAB1/IO03RSB0
C40	VMV0
D1	GND
D2	GND
D3	GND
D4	GND

© 2023 Microchip Technology Inc. and its subsidiaries

QN132	
Pin Number	A3P250 Function
A1	GAB2/IO117UPB3
A2	IO117VPB3
A3	VCCIB3
A4	GFC1/IO110PDB3
A5	GFB0/IO109NPB3
A6	VCCPLF
A7	GFA1/IO108PPB3
A8	GFC2/IO105PPB3
A9	IO103NDB3
A10	VCC
A11	GEA1/IO98PPB3
A12	GEA0/IO98NPB3
A13	GEC2/IO95RSB2
A14	IO91RSB2
A15	VCC
A16	IO90RSB2
A17	IO87RSB2
A18	IO85RSB2
A19	IO82RSB2
A20	IO76RSB2
A21	IO70RSB2
A22	VCC
A23	GDB2/IO62RSB2
A24	TDI
A25	TRST
A26	GDC1/IO58UDB1
A27	VCC
A28	IO54NDB1
A29	IO52NDB1
A30	GCA2/IO51PPB1
A31	GCA0/IO50NPB1
A32	GCB1/IO49PDB1
A33	IO47NSB1
A34	VCC
A35	IO41NPB1
A36	GBA2/IO41PPB1

QN132	
Pin Number	A3P250 Function
A37	GBB1/IO38RSB0
A38	GBC0/IO35RSB0
A39	VCCIB0
A40	IO28RSB0
A41	IO22RSB0
A42	IO18RSB0
A43	IO14RSB0
A44	IO11RSB0
A45	IO07RSB0
A46	VCC
A47	GAC1/IO05RSB0
A48	GAB0/IO02RSB0
B1	IO118VDB3
B2	GAC2/IO116UDB3
B3	GND
B4	GFC0/IO110NDB3
B5	VCOMPLF
B6	GND
B7	GFB2/IO106PSB3
B8	IO103PDB3
B9	GND
B10	GEB0/IO99NDB3
B11	VMV3
B12	GEB2/IO96RSB2
B13	IO92RSB2
B14	GND
B15	IO89RSB2
B16	IO86RSB2
B17	GND
B18	IO78RSB2
B19	IO72RSB2
B20	GND
B21	GNDQ
B22	TMS
B23	TDO
B24	GDC0/IO58VDB1

QN132	
Pin Number	A3P250 Function
B25	GND
B26	IO54PDB1
B27	GCB2/IO52PDB1
B28	GND
B29	GCB0/IO49NDB1
B30	GCC1/IO48PDB1
B31	GND
B32	GBB2/IO42PDB1
B33	VMV1
B34	GBA0/IO39RSB0
B35	GBC1/IO36RSB0
B36	GND
B37	IO26RSB0
B38	IO21RSB0
B39	GND
B40	IO13RSB0
B41	IO08RSB0
B42	GND
B43	GAC0/IO04RSB0
B44	GNDQ
C1	GAA2/IO118UDB3
C2	IO116VDB3
C3	VCC
C4	GFB1/IO109PPB3
C5	GFA0/IO108NPB3
C6	GFA2/IO107PSB3
C7	IO105NPB3
C8	VCCIB3
C9	GEB1/IO99PDB3
C10	GNDQ
C11	GEA2/IO97RSB2
C12	IO94RSB2
C13	VCCIB2
C14	IO88RSB2
C15	IO84RSB2
C16	IO80RSB2

© 2023 Microchip Technology Inc. and its subsidiaries

QN132	
Pin Number	**A3P250 Function**
C17	IO74RSB2
C18	VCCIB2
C19	TCK
C20	VMV2
C21	VPUMP
C22	VJTAG
C23	VCCIB1
C24	IO53NSB1
C25	IO51NPB1
C26	GCA1/IO50PPB1
C27	GCC0/IO48NDB1
C28	VCCIB1
C29	IO42NDB1
C30	GNDQ
C31	GBA1/IO40RSB0
C32	GBB0/IO37RSB0
C33	VCC
C34	IO24RSB0
C35	IO19RSB0
C36	IO16RSB0
C37	IO10RSB0
C38	VCCIB0
C39	GAB1/IO03RSB0
C40	VMV0
D1	GND
D2	GND
D3	GND
D4	GND

Note: For more information on package drawings, see PD3068: Package Mechanical Drawings.

4.4 VQ100

Note: For more information on package drawings, see PD3068: Package Mechanical Drawings.

© 2023 Microchip Technology Inc. and its subsidiaries

FIGURE 4-4 **• VQ100—TOPVIEW**

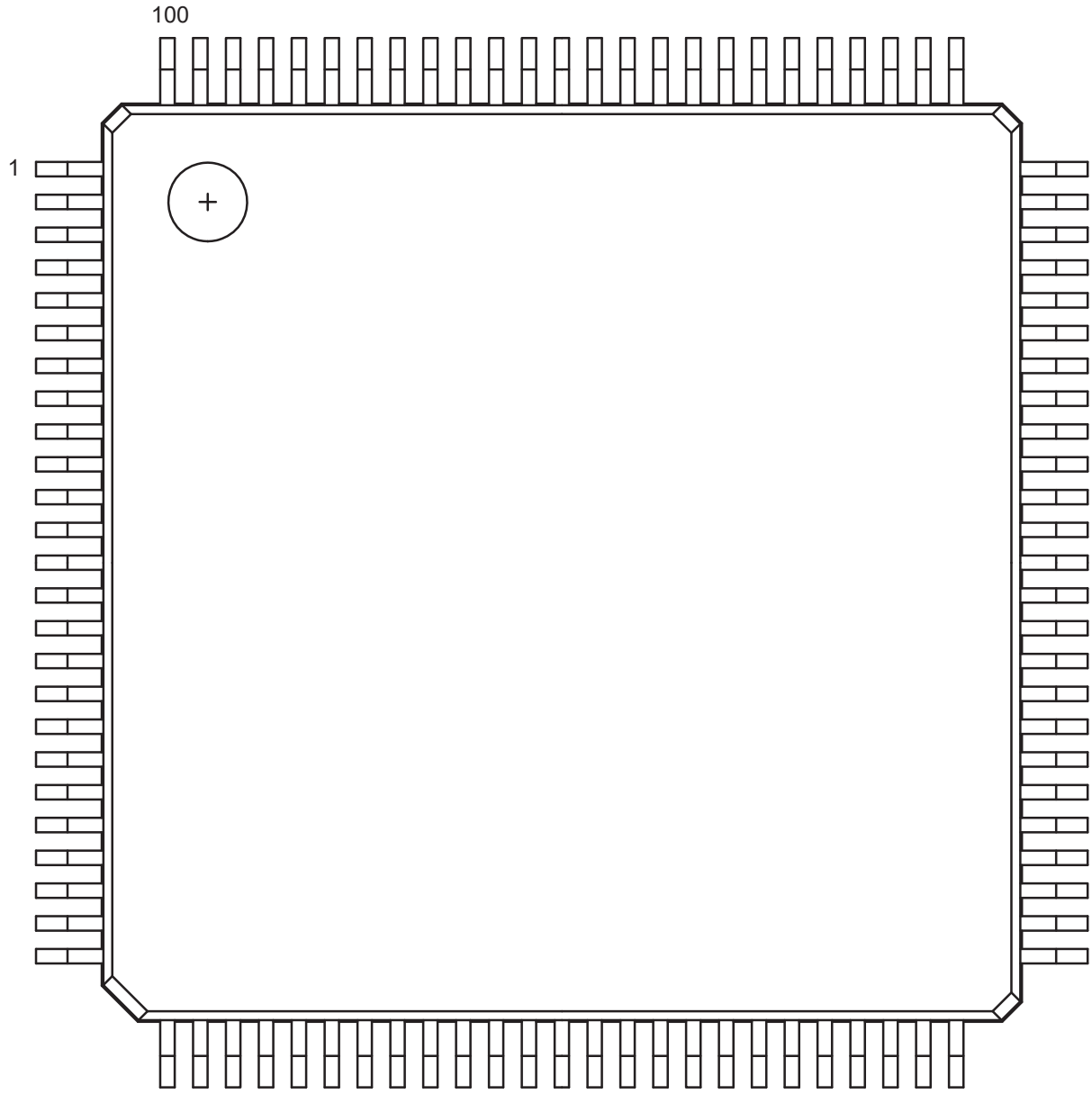

VQ100	
Pin Number	A3P030 Function
1	GND
2	IO82RSB1
3	IO81RSB1
4	IO80RSB1
5	IO79RSB1
6	IO78RSB1
7	IO77RSB1
8	IO76RSB1
9	GND
10	IO75RSB1
11	IO74RSB1
12	GEC0/IO73RSB1
13	GEA0/IO72RSB1
14	GEB0/IO71RSB1
15	IO70RSB1
16	IO69RSB1
17	VCC
18	VCCIB1
19	IO68RSB1
20	IO67RSB1
21	IO66RSB1
22	IO65RSB1
23	IO64RSB1
24	IO63RSB1
25	IO62RSB1
26	IO61RSB1
27	IO60RSB1
28	IO59RSB1
29	IO58RSB1
30	IO57RSB1
31	IO56RSB1
32	IO55RSB1
33	IO54RSB1
34	IO53RSB1
35	IO52RSB1
36	IO51RSB1

VQ100	
Pin Number	A3P030 Function
37	VCC
38	GND
39	VCCIB1
40	IO49RSB1
41	IO47RSB1
42	IO46RSB1
43	IO45RSB1
44	IO44RSB1
45	IO43RSB1
46	IO42RSB1
47	TCK
48	TDI
49	TMS
50	NC
51	GND
52	VPUMP
53	NC
54	TDO
55	TRST
56	VJTAG
57	IO41RSB0
58	IO40RSB0
59	IO39RSB0
60	IO38RSB0
61	IO37RSB0
62	IO36RSB0
63	GDB0/IO34RSB0
64	GDA0/IO33RSB0
65	GDC0/IO32RSB0
66	VCCIB0
67	GND
68	VCC
69	IO31RSB0
70	IO30RSB0
71	IO29RSB0
72	IO28RSB0

VQ100	
Pin Number	A3P030 Function
73	IO27RSB0
74	IO26RSB0
75	IO25RSB0
76	IO24RSB0
77	IO23RSB0
78	IO22RSB0
79	IO21RSB0
80	IO20RSB0
81	IO19RSB0
82	IO18RSB0
83	IO17RSB0
84	IO16RSB0
85	IO15RSB0
86	IO14RSB0
87	VCCIB0
88	GND
89	VCC
90	IO12RSB0
91	IO10RSB0
92	IO08RSB0
93	IO07RSB0
94	IO06RSB0
95	IO05RSB0
96	IO04RSB0
97	IO03RSB0
98	IO02RSB0
99	IO01RSB0
100	IO00RSB0

© 2023 Microchip Technology Inc. and its subsidiaries

VQ100	
Pin Number	A3P060 Function
1	GND
2	GAA2/IO51RSB1
3	IO52RSB1
4	GAB2/IO53RSB1
5	IO95RSB1
6	GAC2/IO94RSB1
7	IO93RSB1
8	IO92RSB1
9	GND
10	GFB1/IO87RSB1
11	GFB0/IO86RSB1
12	VCOMPLF
13	GFA0/IO85RSB1
14	VCCPLF
15	GFA1/IO84RSB1
16	GFA2/IO83RSB1
17	VCC
18	VCCIB1
19	GEC1/IO77RSB1
20	GEB1/IO75RSB1
21	GEB0/IO74RSB1
22	GEA1/IO73RSB1
23	GEA0/IO72RSB1
24	VMV1
25	GNDQ
26	GEA2/IO71RSB1
27	GEB2/IO70RSB1
28	GEC2/IO69RSB1
29	IO68RSB1
30	IO67RSB1
31	IO66RSB1
32	IO65RSB1
33	IO64RSB1
34	IO63RSB1
35	IO62RSB1
36	IO61RSB1

VQ100	
Pin Number	A3P060 Function
37	VCC
38	GND
39	VCCIB1
40	IO60RSB1
41	IO59RSB1
42	IO58RSB1
43	IO57RSB1
44	GDC2/IO56RSB1
45	GDB2/IO55RSB1
46	GDA2/IO54RSB1
47	TCK
48	TDI
49	TMS
50	VMV1
51	GND
52	VPUMP
53	NC
54	TDO
55	TRST
56	VJTAG
57	GDA1/IO49RSB0
58	GDC0/IO46RSB0
59	GDC1/IO45RSB0
60	GCC2/IO43RSB0
61	GCB2/IO42RSB0
62	GCA0/IO40RSB0
63	GCA1/IO39RSB0
64	GCC0/IO36RSB0
65	GCC1/IO35RSB0
66	VCCIB0
67	GND
68	VCC
69	IO31RSB0
70	GBC2/IO29RSB0
71	GBB2/IO27RSB0
72	IO26RSB0

VQ100	
Pin Number	A3P060 Function
73	GBA2/IO25RSB0
74	VMV0
75	GNDQ
76	GBA1/IO24RSB0
77	GBA0/IO23RSB0
78	GBB1/IO22RSB0
79	GBB0/IO21RSB0
80	GBC1/IO20RSB0
81	GBC0/IO19RSB0
82	IO18RSB0
83	IO17RSB0
84	IO15RSB0
85	IO13RSB0
86	IO11RSB0
87	VCCIB0
88	GND
89	VCC
90	IO10RSB0
91	IO09RSB0
92	IO08RSB0
93	GAC1/IO07RSB0
94	GAC0/IO06RSB0
95	GAB1/IO05RSB0
96	GAB0/IO04RSB0
97	GAA1/IO03RSB0
98	GAA0/IO02RSB0
99	IO01RSB0
100	IO00RSB0

© 2023 Microchip Technology Inc. and its subsidiaries

VQ100	
Pin Number	**A3P125 Function**
1	GND
2	GAA2/IO67RSB1
3	IO68RSB1
4	GAB2/IO69RSB1
5	IO132RSB1
6	GAC2/IO131RSB1
7	IO130RSB1
8	IO129RSB1
9	GND
10	GFB1/IO124RSB1
11	GFB0/IO123RSB1
12	VCOMPLF
13	GFA0/IO122RSB1
14	VCCPLF
15	GFA1/IO121RSB1
16	GFA2/IO120RSB1
17	VCC
18	VCCIB1
19	GEC0/IO111RSB1
20	GEB1/IO110RSB1
21	GEB0/IO109RSB1
22	GEA1/IO108RSB1
23	GEA0/IO107RSB1
24	VMV1
25	GNDQ
26	GEA2/IO106RSB1
27	GEB2/IO105RSB1
28	GEC2/IO104RSB1
29	IO102RSB1
30	IO100RSB1
31	IO99RSB1
32	IO97RSB1
33	IO96RSB1
34	IO95RSB1
35	IO94RSB1
36	IO93RSB1

VQ100	
Pin Number	**A3P125 Function**
37	VCC
38	GND
39	VCCIB1
40	IO87RSB1
41	IO84RSB1
42	IO81RSB1
43	IO75RSB1
44	GDC2/IO72RSB1
45	GDB2/IO71RSB1
46	GDA2/IO70RSB1
47	TCK
48	TDI
49	TMS
50	VMV1
51	GND
52	VPUMP
53	NC
54	TDO
55	TRST
56	VJTAG
57	GDA1/IO65RSB0
58	GDC0/IO62RSB0
59	GDC1/IO61RSB0
60	GCC2/IO59RSB0
61	GCB2/IO58RSB0
62	GCA0/IO56RSB0
63	GCA1/IO55RSB0
64	GCC0/IO52RSB0
65	GCC1/IO51RSB0
66	VCCIB0
67	GND
68	VCC
69	IO47RSB0
70	GBC2/IO45RSB0
71	GBB2/IO43RSB0
72	IO42RSB0

VQ100	
Pin Number	**A3P125 Function**
73	GBA2/IO41RSB0
74	VMV0
75	GNDQ
76	GBA1/IO40RSB0
77	GBA0/IO39RSB0
78	GBB1/IO38RSB0
79	GBB0/IO37RSB0
80	GBC1/IO36RSB0
81	GBC0/IO35RSB0
82	IO32RSB0
83	IO28RSB0
84	IO25RSB0
85	IO22RSB0
86	IO19RSB0
87	VCCIB0
88	GND
89	VCC
90	IO15RSB0
91	IO13RSB0
92	IO11RSB0
93	IO09RSB0
94	IO07RSB0
95	GAC1/IO05RSB0
96	GAC0/IO04RSB0
97	GAB1/IO03RSB0
98	GAB0/IO02RSB0
99	GAA1/IO01RSB0
100	GAA0/IO00RSB0

© 2023 Microchip Technology Inc. and its subsidiaries

VQ100	
Pin Number	A3P250 Function
1	GND
2	GAA2/IO118UDB3
3	IO118VDB3
4	GAB2/IO117UDB3
5	IO117VDB3
6	GAC2/IO116UDB3
7	IO116VDB3
8	IO112PSB3
9	GND
10	GFB1/IO109PDB3
11	GFB0/IO109NDB3
12	VCOMPLF
13	GFA0/IO108NPB3
14	VCCPLF
15	GFA1/IO108PPB3
16	GFA2/IO107PSB3
17	VCC
18	VCCIB3
19	GFC2/IO105PSB3
20	GEC1/IO100PDB3
21	GEC0/IO100NDB3
22	GEA1/IO98PDB3
23	GEA0/IO98NDB3
24	VMV3
25	GNDQ
26	GEA2/IO97RSB2
27	GEB2/IO96RSB2
28	GEC2/IO95RSB2
29	IO93RSB2
30	IO92RSB2
31	IO91RSB2
32	IO90RSB2
33	IO88RSB2
34	IO86RSB2
35	IO85RSB2
36	IO84RSB2

VQ100	
Pin Number	A3P250 Function
37	VCC
38	GND
39	VCCIB2
40	IO77RSB2
41	IO74RSB2
42	IO71RSB2
43	GDC2/IO63RSB2
44	GDB2/IO62RSB2
45	GDA2/IO61RSB2
46	GNDQ
47	TCK
48	TDI
49	TMS
50	VMV2
51	GND
52	VPUMP
53	NC
54	TDO
55	TRST
56	VJTAG
57	GDA1/IO60USB1
58	GDC0/IO58VDB1
59	GDC1/IO58UDB1
60	IO52NDB1
61	GCB2/IO52PDB1
62	GCA1/IO50PDB1
63	GCA0/IO50NDB1
64	GCC0/IO48NDB1
65	GCC1/IO48PDB1
66	VCCIB1
67	GND
68	VCC
69	IO43NDB1
70	GBC2/IO43PDB1
71	GBB2/IO42PSB1
72	IO41NDB1

VQ100	
Pin Number	A3P250 Function
73	GBA2/IO41PDB1
74	VMV1
75	GNDQ
76	GBA1/IO40RSB0
77	GBA0/IO39RSB0
78	GBB1/IO38RSB0
79	GBB0/IO37RSB0
80	GBC1/IO36RSB0
81	GBC0/IO35RSB0
82	IO29RSB0
83	IO27RSB0
84	IO25RSB0
85	IO23RSB0
86	IO21RSB0
87	VCCIB0
88	GND
89	VCC
90	IO15RSB0
91	IO13RSB0
92	IO11RSB0
93	GAC1/IO05RSB0
94	GAC0/IO04RSB0
95	GAB1/IO03RSB0
96	GAB0/IO02RSB0
97	GAA1/IO01RSB0
98	GAA0/IO00RSB0
99	GNDQ
100	VMV0

© 2023 Microchip Technology Inc. and its subsidiaries

4.5 TQ144

FIGURE 4-5 **• TQ144—TOPVIEW**

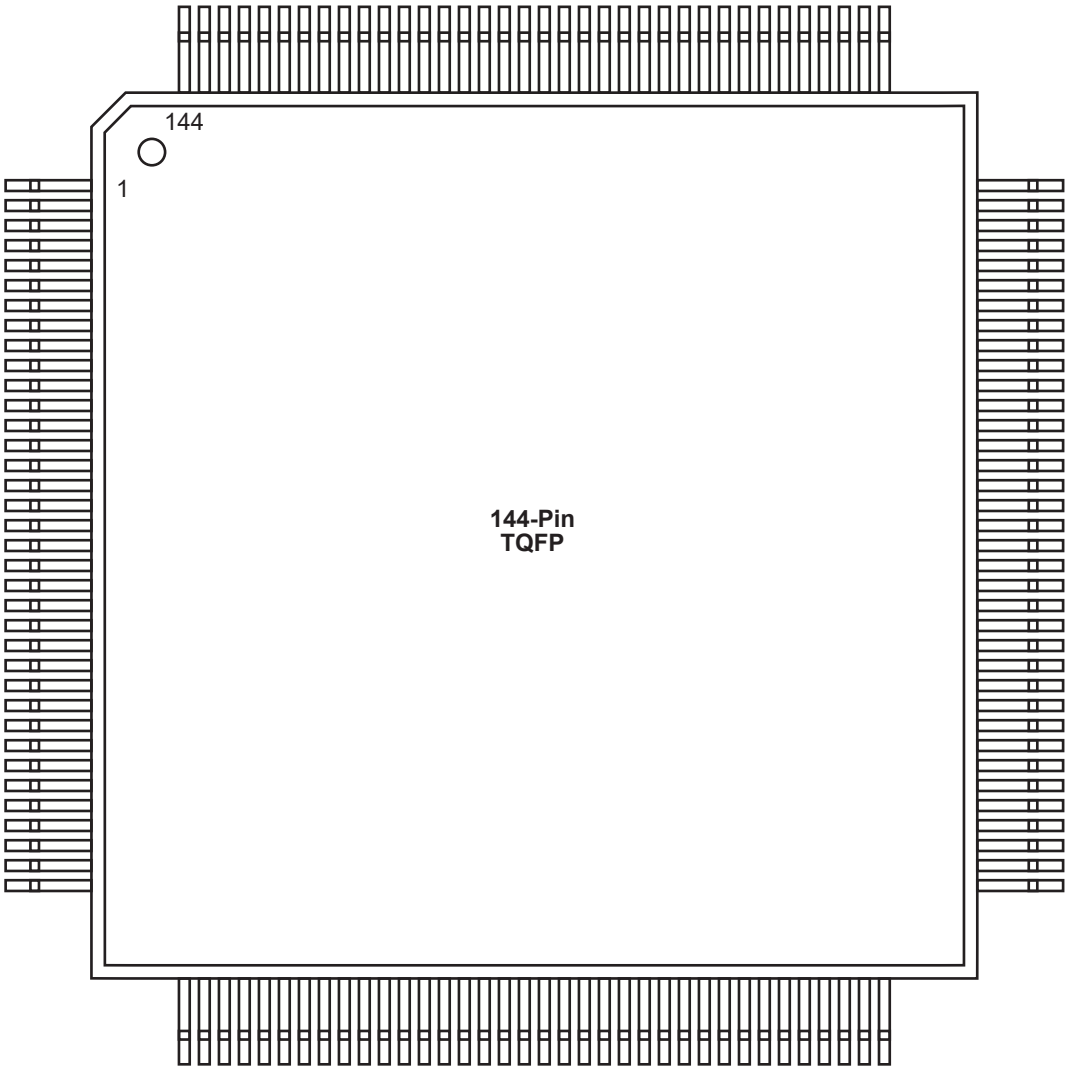

Note: For more information on package drawings, see PD3068: Package Mechanical Drawings.

© 2023 Microchip Technology Inc. and its subsidiaries

TQ144		TQ144		TQ144	
Pin Number	A3P060 Function	Pin Number	A3P060 Function	Pin Number	A3P060 Function
1	GAA2/IO51RSB1	37	NC	73	VPUMP
2	IO52RSB1	38	GEA2/IO71RSB1	74	NC
3	GAB2/IO53RSB1	39	GEB2/IO70RSB1	75	TDO
4	IO95RSB1	40	GEC2/IO69RSB1	76	TRST
5	GAC2/IO94RSB1	41	IO68RSB1	77	VJTAG
6	IO93RSB1	42	IO67RSB1	78	GDA0/IO50RSB0
7	IO92RSB1	43	IO66RSB1	79	GDB0/IO48RSB0
8	IO91RSB1	44	IO65RSB1	80	GDB1/IO47RSB0
9	VCC	45	VCC	81	VCCIB0
10	GND	46	GND	82	GND
11	VCCIB1	47	VCCIB1	83	IO44RSB0
12	IO90RSB1	48	NC	84	GCC2/IO43RSB0
13	GFC1/IO89RSB1	49	IO64RSB1	85	GCB2/IO42RSB0
14	GFC0/IO88RSB1	50	NC	86	GCA2/IO41RSB0
15	GFB1/IO87RSB1	51	IO63RSB1	87	GCA0/IO40RSB0
16	GFB0/IO86RSB1	52	NC	88	GCA1/IO39RSB0
17	VCOMPLF	53	IO62RSB1	89	GCB0/IO38RSB0
18	GFA0/IO85RSB1	54	NC	90	GCB1/IO37RSB0
19	VCCPLF	55	IO61RSB1	91	GCC0/IO36RSB0
20	GFA1/IO84RSB1	56	NC	92	GCC1/IO35RSB0
21	GFA2/IO83RSB1	57	NC	93	IO34RSB0
22	GFB2/IO82RSB1	58	IO60RSB1	94	IO33RSB0
23	GFC2/IO81RSB1	59	IO59RSB1	95	NC
24	IO80RSB1	60	IO58RSB1	96	NC
25	IO79RSB1	61	IO57RSB1	97	NC
26	IO78RSB1	62	NC	98	VCCIB0
27	GND	63	GND	99	GND
28	VCCIB1	64	NC	100	VCC
29	GEC1/IO77RSB1	65	GDC2/IO56RSB1	101	IO30RSB0
30	GEC0/IO76RSB1	66	GDB2/IO55RSB1	102	GBC2/IO29RSB0
31	GEB1/IO75RSB1	67	GDA2/IO54RSB1	103	IO28RSB0
32	GEB0/IO74RSB1	68	GNDQ	104	GBB2/IO27RSB0
33	GEA1/IO73RSB1	69	TCK	105	IO26RSB0
34	GEA0/IO72RSB1	70	TDI	106	GBA2/IO25RSB0
35	VMV1	71	TMS	107	VMV0
36	GNDQ	72	VMV1	108	GNDQ

© 2023 Microchip Technology Inc. and its subsidiaries

TQ144	
Pin Number	**A3P060 Function**
109	NC
110	NC
111	GBA1/IO24RSB0
112	GBA0/IO23RSB0
113	GBB1/IO22RSB0
114	GBB0/IO21RSB0
115	GBC1/IO20RSB0
116	GBC0/IO19RSB0
117	VCCIB0
118	GND
119	VCC
120	IO18RSB0
121	IO17RSB0
122	IO16RSB0
123	IO15RSB0
124	IO14RSB0
125	IO13RSB0
126	IO12RSB0
127	IO11RSB0
128	NC
129	IO10RSB0
130	IO09RSB0
131	IO08RSB0
132	GAC1/IO07RSB0
133	GAC0/IO06RSB0
134	NC
135	GND
136	NC
137	GAB1/IO05RSB0
138	GAB0/IO04RSB0
139	GAA1/IO03RSB0
140	GAA0/IO02RSB0
141	IO01RSB0
142	IO00RSB0
143	GNDQ
144	VMV0

© 2023 Microchip Technology Inc. and its subsidiaries

TQ144	
Pin Number	A3P125 Function
1	GAA2/IO67RSB1
2	IO68RSB1
3	GAB2/IO69RSB1
4	IO132RSB1
5	GAC2/IO131RSB1
6	IO130RSB1
7	IO129RSB1
8	IO128RSB1
9	VCC
10	GND
11	VCCIB1
12	IO127RSB1
13	GFC1/IO126RSB1
14	GFC0/IO125RSB1
15	GFB1/IO124RSB1
16	GFB0/IO123RSB1
17	VCOMPLF
18	GFA0/IO122RSB1
19	VCCPLF
20	GFA1/IO121RSB1
21	GFA2/IO120RSB1
22	GFB2/IO119RSB1
23	GFC2/IO118RSB1
24	IO117RSB1
25	IO116RSB1
26	IO115RSB1
27	GND
28	VCCIB1
29	GEC1/IO112RSB1
30	GEC0/IO111RSB1
31	GEB1/IO110RSB1
32	GEB0/IO109RSB1
33	GEA1/IO108RSB1
34	GEA0/IO107RSB1
35	VMV1
36	GNDQ

TQ144	
Pin Number	A3P125 Function
37	NC
38	GEA2/IO106RSB1
39	GEB2/IO105RSB1
40	GEC2/IO104RSB1
41	IO103RSB1
42	IO102RSB1
43	IO101RSB1
44	IO100RSB1
45	VCC
46	GND
47	VCCIB1
48	IO99RSB1
49	IO97RSB1
50	IO95RSB1
51	IO93RSB1
52	IO92RSB1
53	IO90RSB1
54	IO88RSB1
55	IO86RSB1
56	IO84RSB1
57	IO83RSB1
58	IO82RSB1
59	IO81RSB1
60	IO80RSB1
61	IO79RSB1
62	VCC
63	GND
64	VCCIB1
65	GDC2/IO72RSB1
66	GDB2/IO71RSB1
67	GDA2/IO70RSB1
68	GNDQ
69	TCK
70	TDI
71	TMS
72	VMV1

TQ144	
Pin Number	A3P125 Function
73	VPUMP
74	NC
75	TDO
76	TRST
77	VJTAG
78	GDA0/IO66RSB0
79	GDB0/IO64RSB0
80	GDB1/IO63RSB0
81	VCCIB0
82	GND
83	IO60RSB0
84	GCC2/IO59RSB0
85	GCB2/IO58RSB0
86	GCA2/IO57RSB0
87	GCA0/IO56RSB0
88	GCA1/IO55RSB0
89	GCB0/IO54RSB0
90	GCB1/IO53RSB0
91	GCC0/IO52RSB0
92	GCC1/IO51RSB0
93	IO50RSB0
94	IO49RSB0
95	NC
96	NC
97	NC
98	VCCIB0
99	GND
100	VCC
101	IO47RSB0
102	GBC2/IO45RSB0
103	IO44RSB0
104	GBB2/IO43RSB0
105	IO42RSB0
106	GBA2/IO41RSB0
107	VMV0
108	GNDQ

© 2023 Microchip Technology Inc. and its subsidiaries

TQ144	
Pin Number	**A3P125 Function**
109	GBA1/IO40RSB0
110	GBA0/IO39RSB0
111	GBB1/IO38RSB0
112	GBB0/IO37RSB0
113	GBC1/IO36RSB0
114	GBC0/IO35RSB0
115	IO34RSB0
116	IO33RSB0
117	VCCIB0
118	GND
119	VCC
120	IO29RSB0
121	IO28RSB0
122	IO27RSB0
123	IO25RSB0
124	IO23RSB0
125	IO21RSB0
126	IO19RSB0
127	IO17RSB0
128	IO16RSB0
129	IO14RSB0
130	IO12RSB0
131	IO10RSB0
132	IO08RSB0
133	IO06RSB0
134	VCCIB0
135	GND
136	VCC
137	GAC1/IO05RSB0
138	GAC0/IO04RSB0
139	GAB1/IO03RSB0
140	GAB0/IO02RSB0
141	GAA1/IO01RSB0
142	GAA0/IO00RSB0
143	GNDQ
144	VMV0

© 2023 Microchip Technology Inc. and its subsidiaries

4.6 PQ208

***FIGURE 4-6* • PQ208—TOPVIEW**

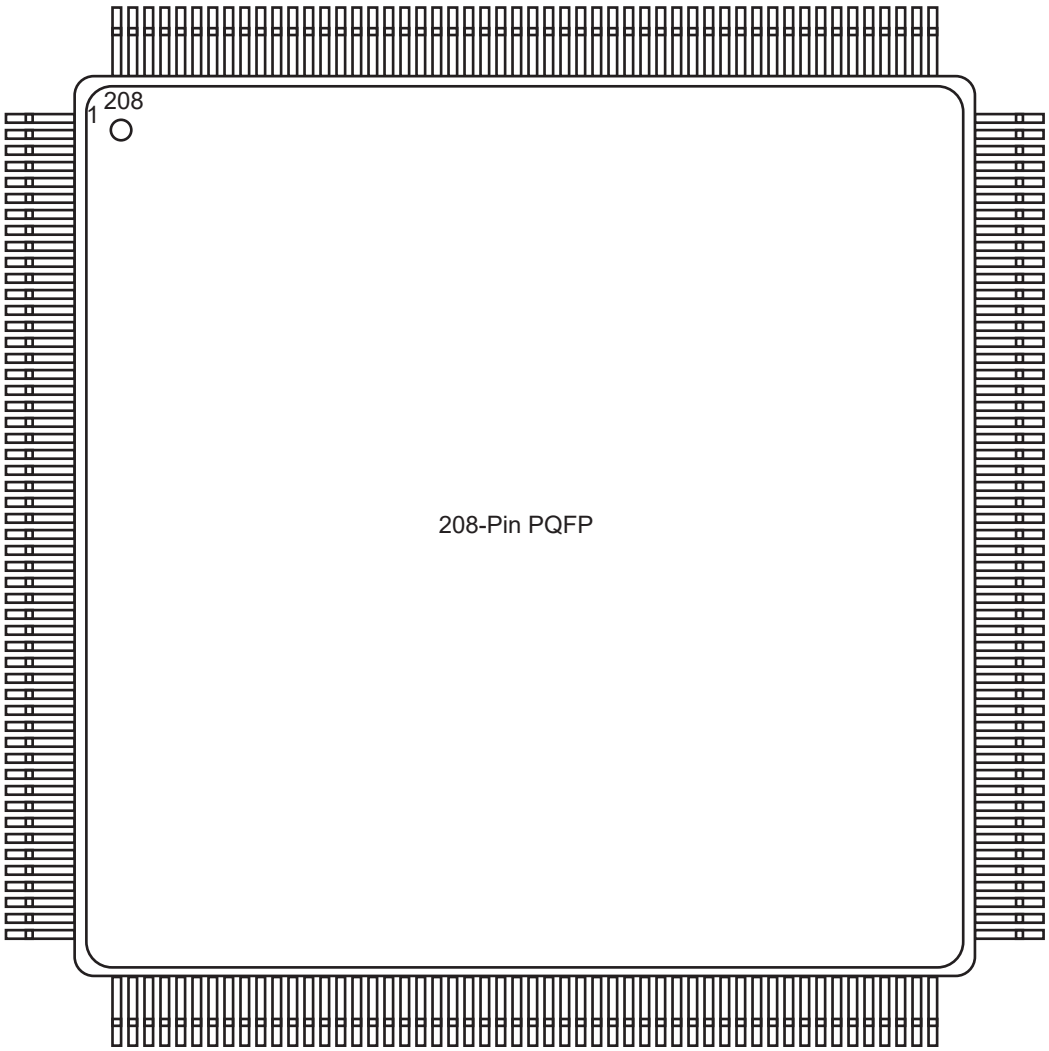

Note: For more information on package drawings, see PD3068: Package Mechanical Drawings.

PQ208	
Pin Number	A3P125 Function
1	GND
2	GAA2/IO67RSB1
3	IO68RSB1
4	GAB2/IO69RSB1
5	IO132RSB1
6	GAC2/IO131RSB1
7	NC
8	NC
9	IO130RSB1
10	IO129RSB1
11	NC
12	IO128RSB1
13	NC
14	NC
15	NC
16	VCC
17	GND
18	VCCIB1
19	IO127RSB1
20	NC
21	GFC1/IO126RSB1
22	GFC0/IO125RSB1
23	GFB1/IO124RSB1
24	GFB0/IO123RSB1
25	VCOMPLF
26	GFA0/IO122RSB1
27	VCCPLF
28	GFA1/IO121RSB1
29	GND
30	GFA2/IO120RSB1
31	NC
32	GFB2/IO119RSB1
33	NC
34	GFC2/IO118RSB1
35	IO117RSB1
36	NC

PQ208	
Pin Number	A3P125 Function
37	IO116RSB1
38	IO115RSB1
39	NC
40	VCCIB1
41	GND
42	IO114RSB1
43	IO113RSB1
44	GEC1/IO112RSB1
45	GEC0/IO111RSB1
46	GEB1/IO110RSB1
47	GEB0/IO109RSB1
48	GEA1/IO108RSB1
49	GEA0/IO107RSB1
50	VMV1
51	GNDQ
52	GND
53	NC
54	NC
55	GEA2/IO106RSB1
56	GEB2/IO105RSB1
57	GEC2/IO104RSB1
58	IO103RSB1
59	IO102RSB1
60	IO101RSB1
61	IO100RSB1
62	VCCIB1
63	IO99RSB1
64	IO98RSB1
65	GND
66	IO97RSB1
67	IO96RSB1
68	IO95RSB1
69	IO94RSB1
70	IO93RSB1
71	VCC
72	VCCIB1

PQ208	
Pin Number	A3P125 Function
73	IO92RSB1
74	IO91RSB1
75	IO90RSB1
76	IO89RSB1
77	IO88RSB1
78	IO87RSB1
79	IO86RSB1
80	IO85RSB1
81	GND
82	IO84RSB1
83	IO83RSB1
84	IO82RSB1
85	IO81RSB1
86	IO80RSB1
87	IO79RSB1
88	VCC
89	VCCIB1
90	IO78RSB1
91	IO77RSB1
92	IO76RSB1
93	IO75RSB1
94	IO74RSB1
95	IO73RSB1
96	GDC2/IO72RSB1
97	GND
98	GDB2/IO71RSB1
99	GDA2/IO70RSB1
100	GNDQ
101	TCK
102	TDI
103	TMS
104	VMV1
105	GND
106	VPUMP
107	NC
108	TDO

© 2023 Microchip Technology Inc. and its subsidiaries

PQ208	
Pin Number	A3P125 Function
109	TRST
110	VJTAG
111	GDA0/IO66RSB0
112	GDA1/IO65RSB0
113	GDB0/IO64RSB0
114	GDB1/IO63RSB0
115	GDC0/IO62RSB0
116	GDC1/IO61RSB0
117	NC
118	NC
119	NC
120	NC
121	NC
122	GND
123	VCCIB0
124	NC
125	NC
126	VCC
127	IO60RSB0
128	GCC2/IO59RSB0
129	GCB2/IO58RSB0
130	GND
131	GCA2/IO57RSB0
132	GCA0/IO56RSB0
133	GCA1/IO55RSB0
134	GCB0/IO54RSB0
135	GCB1/IO53RSB0
136	GCC0/IO52RSB0
137	GCC1/IO51RSB0
138	IO50RSB0
139	IO49RSB0
140	VCCIB0
141	GND
142	VCC
143	IO48RSB0
144	IO47RSB0

PQ208	
Pin Number	A3P125 Function
145	IO46RSB0
146	NC
147	NC
148	NC
149	GBC2/IO45RSB0
150	IO44RSB0
151	GBB2/IO43RSB0
152	IO42RSB0
153	GBA2/IO41RSB0
154	VMV0
155	GNDQ
156	GND
157	NC
158	GBA1/IO40RSB0
159	GBA0/IO39RSB0
160	GBB1/IO38RSB0
161	GBB0/IO37RSB0
162	GND
163	GBC1/IO36RSB0
164	GBC0/IO35RSB0
165	IO34RSB0
166	IO33RSB0
167	IO32RSB0
168	IO31RSB0
169	IO30RSB0
170	VCCIB0
171	VCC
172	IO29RSB0
173	IO28RSB0
174	IO27RSB0
175	IO26RSB0
176	IO25RSB0
177	IO24RSB0
178	GND
179	IO23RSB0
180	IO22RSB0

PQ208	
Pin Number	A3P125 Function
181	IO21RSB0
182	IO20RSB0
183	IO19RSB0
184	IO18RSB0
185	IO17RSB0
186	VCCIB0
187	VCC
188	IO16RSB0
189	IO15RSB0
190	IO14RSB0
191	IO13RSB0
192	IO12RSB0
193	IO11RSB0
194	IO10RSB0
195	GND
196	IO09RSB0
197	IO08RSB0
198	IO07RSB0
199	IO06RSB0
200	VCCIB0
201	GAC1/IO05RSB0
202	GAC0/IO04RSB0
203	GAB1/IO03RSB0
204	GAB0/IO02RSB0
205	GAA1/IO01RSB0
206	GAA0/IO00RSB0
207	GNDQ
208	VMV0

© 2023 Microchip Technology Inc. and its subsidiaries

PQ208	
Pin Number	A3P250 Function
1	GND
2	GAA2/IO118UDB3
3	IO118VDB3
4	GAB2/IO117UDB3
5	IO117VDB3
6	GAC2/IO116UDB3
7	IO116VDB3
8	IO115UDB3
9	IO115VDB3
10	IO114UDB3
11	IO114VDB3
12	IO113PDB3
13	IO113NDB3
14	IO112PDB3
15	IO112NDB3
16	VCC
17	GND
18	VCCIB3
19	IO111PDB3
20	IO111NDB3
21	GFC1/IO110PDB3
22	GFC0/IO110NDB3
23	GFB1/IO109PDB3
24	GFB0/IO109NDB3
25	VCOMPLF
26	GFA0/IO108NPB3
27	VCCPLF
28	GFA1/IO108PPB3
29	GND
30	GFA2/IO107PDB3
31	IO107NDB3
32	GFB2/IO106PDB3
33	IO106NDB3
34	GFC2/IO105PDB3
35	IO105NDB3
36	NC

PQ208	
Pin Number	A3P250 Function
37	IO104PDB3
38	IO104NDB3
39	IO103PSB3
40	VCCIB3
41	GND
42	IO101PDB3
43	IO101NDB3
44	GEC1/IO100PDB3
45	GEC0/IO100NDB3
46	GEB1/IO99PDB3
47	GEB0/IO99NDB3
48	GEA1/IO98PDB3
49	GEA0/IO98NDB3
50	VMV3
51	GNDQ
52	GND
53	NC
54	NC
55	GEA2/IO97RSB2
56	GEB2/IO96RSB2
57	GEC2/IO95RSB2
58	IO94RSB2
59	IO93RSB2
60	IO92RSB2
61	IO91RSB2
62	VCCIB2
63	IO90RSB2
64	IO89RSB2
65	GND
66	IO88RSB2
67	IO87RSB2
68	IO86RSB2
69	IO85RSB2
70	IO84RSB2
71	VCC
72	VCCIB2

PQ208	
Pin Number	A3P250 Function
73	IO83RSB2
74	IO82RSB2
75	IO81RSB2
76	IO80RSB2
77	IO79RSB2
78	IO78RSB2
79	IO77RSB2
80	IO76RSB2
81	GND
82	IO75RSB2
83	IO74RSB2
84	IO73RSB2
85	IO72RSB2
86	IO71RSB2
87	IO70RSB2
88	VCC
89	VCCIB2
90	IO69RSB2
91	IO68RSB2
92	IO67RSB2
93	IO66RSB2
94	IO65RSB2
95	IO64RSB2
96	GDC2/IO63RSB2
97	GND
98	GDB2/IO62RSB2
99	GDA2/IO61RSB2
100	GNDQ
101	TCK
102	TDI
103	TMS
104	VMV2
105	GND
106	VPUMP
107	NC
108	TDO

© 2023 Microchip Technology Inc. and its subsidiaries

PQ208	
Pin Number	A3P250 Function
109	TRST
110	VJTAG
111	GDA0/IO60VDB1
112	GDA1/IO60UDB1
113	GDB0/IO59VDB1
114	GDB1/IO59UDB1
115	GDC0/IO58VDB1
116	GDC1/IO58UDB1
117	IO57VDB1
118	IO57UDB1
119	IO56NDB1
120	IO56PDB1
121	IO55RSB1
122	GND
123	VCCIB1
124	NC
125	NC
126	VCC
127	IO53NDB1
128	GCC2/IO53PDB1
129	GCB2/IO52PSB1
130	GND
131	GCA2/IO51PSB1
132	GCA1/IO50PDB1
133	GCA0/IO50NDB1
134	GCB0/IO49NDB1
135	GCB1/IO49PDB1
136	GCC0/IO48NDB1
137	GCC1/IO48PDB1
138	IO47NDB1
139	IO47PDB1
140	VCCIB1
141	GND
142	VCC
143	IO46RSB1
144	IO45NDB1

PQ208	
Pin Number	A3P250 Function
145	IO45PDB1
146	IO44NDB1
147	IO44PDB1
148	IO43NDB1
149	GBC2/IO43PDB1
150	IO42NDB1
151	GBB2/IO42PDB1
152	IO41NDB1
153	GBA2/IO41PDB1
154	VMV1
155	GNDQ
156	GND
157	NC
158	GBA1/IO40RSB0
159	GBA0/IO39RSB0
160	GBB1/IO38RSB0
161	GBB0/IO37RSB0
162	GND
163	GBC1/IO36RSB0
164	GBC0/IO35RSB0
165	IO34RSB0
166	IO33RSB0
167	IO32RSB0
168	IO31RSB0
169	IO30RSB0
170	VCCIB0
171	VCC
172	IO29RSB0
173	IO28RSB0
174	IO27RSB0
175	IO26RSB0
176	IO25RSB0
177	IO24RSB0
178	GND
179	IO23RSB0
180	IO22RSB0

PQ208	
Pin Number	A3P250 Function
181	IO21RSB0
182	IO20RSB0
183	IO19RSB0
184	IO18RSB0
185	IO17RSB0
186	VCCIB0
187	VCC
188	IO16RSB0
189	IO15RSB0
190	IO14RSB0
191	IO13RSB0
192	IO12RSB0
193	IO11RSB0
194	IO10RSB0
195	GND
196	IO09RSB0
197	IO08RSB0
198	IO07RSB0
199	IO06RSB0
200	VCCIB0
201	GAC1/IO05RSB0
202	GAC0/IO04RSB0
203	GAB1/IO03RSB0
204	GAB0/IO02RSB0
205	GAA1/IO01RSB0
206	GAA0/IO00RSB0
207	GNDQ
208	VMV0

© 2023 Microchip Technology Inc. and its subsidiaries

PQ208	
Pin Number	A3P400 Function
1	GND
2	GAA2/IO155UDB3
3	IO155VDB3
4	GAB2/IO154UDB3
5	IO154VDB3
6	GAC2/IO153UDB3
7	IO153VDB3
8	IO152UDB3
9	IO152VDB3
10	IO151UDB3
11	IO151VDB3
12	IO150PDB3
13	IO150NDB3
14	IO149PDB3
15	IO149NDB3
16	VCC
17	GND
18	VCCIB3
19	IO148PDB3
20	IO148NDB3
21	GFC1/IO147PDB3
22	GFC0/IO147NDB3
23	GFB1/IO146PDB3
24	GFB0/IO146NDB3
25	VCOMPLF
26	GFA0/IO145NPB3
27	VCCPLF
28	GFA1/IO145PPB3
29	GND
30	GFA2/IO144PDB3
31	IO144NDB3
32	GFB2/IO143PDB3
33	IO143NDB3
34	GFC2/IO142PDB3
35	IO142NDB3
36	NC

PQ208	
Pin Number	A3P400 Function
37	IO141PSB3
38	IO140PDB3
39	IO140NDB3
40	VCCIB3
41	GND
42	IO138PDB3
43	IO138NDB3
44	GEC1/IO137PDB3
45	GEC0/IO137NDB3
46	GEB1/IO136PDB3
47	GEB0/IO136NDB3
48	GEA1/IO135PDB3
49	GEA0/IO135NDB3
50	VMV3
51	GNDQ
52	GND
53	VMV2
54	NC
55	GEA2/IO134RSB2
56	GEB2/IO133RSB2
57	GEC2/IO132RSB2
58	IO131RSB2
59	IO130RSB2
60	IO129RSB2
61	IO128RSB2
62	VCCIB2
63	IO125RSB2
64	IO123RSB2
65	GND
66	IO121RSB2
67	IO119RSB2
68	IO117RSB2
69	IO115RSB2
70	IO113RSB2
71	VCC
72	VCCIB2

PQ208	
Pin Number	A3P400 Function
73	IO112RSB2
74	IO111RSB2
75	IO110RSB2
76	IO109RSB2
77	IO108RSB2
78	IO107RSB2
79	IO106RSB2
80	IO104RSB2
81	GND
82	IO102RSB2
83	IO101RSB2
84	IO100RSB2
85	IO99RSB2
86	IO98RSB2
87	IO97RSB2
88	VCC
89	VCCIB2
90	IO94RSB2
91	IO92RSB2
92	IO90RSB2
93	IO88RSB2
94	IO86RSB2
95	IO84RSB2
96	GDC2/IO82RSB2
97	GND
98	GDB2/IO81RSB2
99	GDA2/IO80RSB2
100	GNDQ
101	TCK
102	TDI
103	TMS
104	VMV2
105	GND
106	VPUMP
107	NC
108	TDO

© 2023 Microchip Technology Inc. and its subsidiaries

PQ208	
Pin Number	A3P400 Function
109	TRST
110	VJTAG
111	GDA0/IO79VDB1
112	GDA1/IO79UDB1
113	GDB0/IO78VDB1
114	GDB1/IO78UDB1
115	GDC0/IO77VDB1
116	GDC1/IO77UDB1
117	IO76VDB1
118	IO76UDB1
119	IO75NDB1
120	IO75PDB1
121	IO74RSB1
122	GND
123	VCCIB1
124	NC
125	NC
126	VCC
127	IO72NDB1
128	GCC2/IO72PDB1
129	GCB2/IO71PSB1
130	GND
131	GCA2/IO70PSB1
132	GCA1/IO69PDB1
133	GCA0/IO69NDB1
134	GCB0/IO68NDB1
135	GCB1/IO68PDB1
136	GCC0/IO67NDB1
137	GCC1/IO67PDB1
138	IO66NDB1
139	IO66PDB1
140	VCCIB1
141	GND
142	VCC
143	IO65RSB1
144	IO64NDB1

PQ208	
Pin Number	A3P400 Function
145	IO64PDB1
146	IO63NDB1
147	IO63PDB1
148	IO62NDB1
149	GBC2/IO62PDB1
150	IO61NDB1
151	GBB2/IO61PDB1
152	IO60NDB1
153	GBA2/IO60PDB1
154	VMV1
155	GNDQ
156	GND
157	VMV0
158	GBA1/IO59RSB0
159	GBA0/IO58RSB0
160	GBB1/IO57RSB0
161	GBB0/IO56RSB0
162	GND
163	GBC1/IO55RSB0
164	GBC0/IO54RSB0
165	IO52RSB0
166	IO49RSB0
167	IO46RSB0
168	IO43RSB0
169	IO40RSB0
170	VCCIB0
171	VCC
172	IO36RSB0
173	IO35RSB0
174	IO34RSB0
175	IO33RSB0
176	IO32RSB0
177	IO31RSB0
178	GND
179	IO29RSB0
180	IO28RSB0

PQ208	
Pin Number	A3P400 Function
181	IO27RSB0
182	IO26RSB0
183	IO25RSB0
184	IO24RSB0
185	IO23RSB0
186	VCCIB0
187	VCC
188	IO21RSB0
189	IO20RSB0
190	IO19RSB0
191	IO18RSB0
192	IO17RSB0
193	IO16RSB0
194	IO15RSB0
195	GND
196	IO13RSB0
197	IO11RSB0
198	IO09RSB0
199	IO07RSB0
200	VCCIB0
201	GAC1/IO05RSB0
202	GAC0/IO04RSB0
203	GAB1/IO03RSB0
204	GAB0/IO02RSB0
205	GAA1/IO01RSB0
206	GAA0/IO00RSB0
207	GNDQ
208	VMV0

© 2023 Microchip Technology Inc. and its subsidiaries

PQ208	
Pin Number	A3P600 Function
1	GND
2	GAA2/IO174PDB3
3	IO174NDB3
4	GAB2/IO173PDB3
5	IO173NDB3
6	GAC2/IO172PDB3
7	IO172NDB3
8	IO171PDB3
9	IO171NDB3
10	IO170PDB3
11	IO170NDB3
12	IO169PDB3
13	IO169NDB3
14	IO168PDB3
15	IO168NDB3
16	VCC
17	GND
18	VCCIB3
19	IO166PDB3
20	IO166NDB3
21	GFC1/IO164PDB3
22	GFC0/IO164NDB3
23	GFB1/IO163PDB3
24	GFB0/IO163NDB3
25	VCOMPLF
26	GFA0/IO162NPB3
27	VCCPLF
28	GFA1/IO162PPB3
29	GND
30	GFA2/IO161PDB3
31	IO161NDB3
32	GFB2/IO160PDB3
33	IO160NDB3
34	GFC2/IO159PDB3
35	IO159NDB3
36	VCC

PQ208	
Pin Number	A3P600 Function
37	IO152PDB3
38	IO152NDB3
39	IO150PSB3
40	VCCIB3
41	GND
42	IO147PDB3
43	IO147NDB3
44	GEC1/IO146PDB3
45	GEC0/IO146NDB3
46	GEB1/IO145PDB3
47	GEB0/IO145NDB3
48	GEA1/IO144PDB3
49	GEA0/IO144NDB3
50	VMV3
51	GNDQ
52	GND
53	VMV2
54	GEA2/IO143RSB2
55	GEB2/IO142RSB2
56	GEC2/IO141RSB2
57	IO140RSB2
58	IO139RSB2
59	IO138RSB2
60	IO137RSB2
61	IO136RSB2
62	VCCIB2
63	IO135RSB2
64	IO133RSB2
65	GND
66	IO131RSB2
67	IO129RSB2
68	IO127RSB2
69	IO125RSB2
70	IO123RSB2
71	VCC
72	VCCIB2

PQ208	
Pin Number	A3P600 Function
73	IO120RSB2
74	IO119RSB2
75	IO118RSB2
76	IO117RSB2
77	IO116RSB2
78	IO115RSB2
79	IO114RSB2
80	IO112RSB2
81	GND
82	IO111RSB2
83	IO110RSB2
84	IO109RSB2
85	IO108RSB2
86	IO107RSB2
87	IO106RSB2
88	VCC
89	VCCIB2
90	IO104RSB2
91	IO102RSB2
92	IO100RSB2
93	IO98RSB2
94	IO96RSB2
95	IO92RSB2
96	GDC2/IO91RSB2
97	GND
98	GDB2/IO90RSB2
99	GDA2/IO89RSB2
100	GNDQ
101	TCK
102	TDI
103	TMS
104	VMV2
105	GND
106	VPUMP
107	GNDQ
108	TDO

© 2023 Microchip Technology Inc. and its subsidiaries

PQ208	
Pin Number	A3P600 Function
109	TRST
110	VJTAG
111	GDA0/IO88NDB1
112	GDA1/IO88PDB1
113	GDB0/IO87NDB1
114	GDB1/IO87PDB1
115	GDC0/IO86NDB1
116	GDC1/IO86PDB1
117	IO84NDB1
118	IO84PDB1
119	IO82NDB1
120	IO82PDB1
121	IO81PSB1
122	GND
123	VCCIB1
124	IO77NDB1
125	IO77PDB1
126	NC
127	IO74NDB1
128	GCC2/IO74PDB1
129	GCB2/IO73PSB1
130	GND
131	GCA2/IO72PSB1
132	GCA1/IO71PDB1
133	GCA0/IO71NDB1
134	GCB0/IO70NDB1
135	GCB1/IO70PDB1
136	GCC0/IO69NDB1
137	GCC1/IO69PDB1
138	IO67NDB1
139	IO67PDB1
140	VCCIB1
141	GND
142	VCC
143	IO65PSB1
144	IO64NDB1

PQ208	
Pin Number	A3P600 Function
145	IO64PDB1
146	IO63NDB1
147	IO63PDB1
148	IO62NDB1
149	GBC2/IO62PDB1
150	IO61NDB1
151	GBB2/IO61PDB1
152	IO60NDB1
153	GBA2/IO60PDB1
154	VMV1
155	GNDQ
156	GND
157	VMV0
158	GBA1/IO59RSB0
159	GBA0/IO58RSB0
160	GBB1/IO57RSB0
161	GBB0/IO56RSB0
162	GND
163	GBC1/IO55RSB0
164	GBC0/IO54RSB0
165	IO52RSB0
166	IO50RSB0
167	IO48RSB0
168	IO46RSB0
169	IO44RSB0
170	VCCIB0
171	VCC
172	IO36RSB0
173	IO35RSB0
174	IO34RSB0
175	IO33RSB0
176	IO32RSB0
177	IO31RSB0
178	GND
179	IO29RSB0
180	IO28RSB0

PQ208	
Pin Number	A3P600 Function
181	IO27RSB0
182	IO26RSB0
183	IO25RSB0
184	IO24RSB0
185	IO23RSB0
186	VCCIB0
187	VCC
188	IO20RSB0
189	IO19RSB0
190	IO18RSB0
191	IO17RSB0
192	IO16RSB0
193	IO14RSB0
194	IO12RSB0
195	GND
196	IO10RSB0
197	IO09RSB0
198	IO08RSB0
199	IO07RSB0
200	VCCIB0
201	GAC1/IO05RSB0
202	GAC0/IO04RSB0
203	GAB1/IO03RSB0
204	GAB0/IO02RSB0
205	GAA1/IO01RSB0
206	GAA0/IO00RSB0
207	GNDQ
208	VMV0

© 2023 Microchip Technology Inc. and its subsidiaries

PQ208	
Pin Number	A3P1000 Function
1	GND
2	GAA2/IO225PDB3
3	IO225NDB3
4	GAB2/IO224PDB3
5	IO224NDB3
6	GAC2/IO223PDB3
7	IO223NDB3
8	IO222PDB3
9	IO222NDB3
10	IO220PDB3
11	IO220NDB3
12	IO218PDB3
13	IO218NDB3
14	IO216PDB3
15	IO216NDB3
16	VCC
17	GND
18	VCCIB3
19	IO212PDB3
20	IO212NDB3
21	GFC1/IO209PDB3
22	GFC0/IO209NDB3
23	GFB1/IO208PDB3
24	GFB0/IO208NDB3
25	VCOMPLF
26	GFA0/IO207NPB3
27	VCCPLF
28	GFA1/IO207PPB3
29	GND
30	GFA2/IO206PDB3
31	IO206NDB3
32	GFB2/IO205PDB3
33	IO205NDB3
34	GFC2/IO204PDB3
35	IO204NDB3
36	VCC

PQ208	
Pin Number	A3P1000 Function
37	IO199PDB3
38	IO199NDB3
39	IO197PSB3
40	VCCIB3
41	GND
42	IO191PDB3
43	IO191NDB3
44	GEC1/IO190PDB3
45	GEC0/IO190NDB3
46	GEB1/IO189PDB3
47	GEB0/IO189NDB3
48	GEA1/IO188PDB3
49	GEA0/IO188NDB3
50	VMV3
51	GNDQ
52	GND
53	VMV2
54	GEA2/IO187RSB2
55	GEB2/IO186RSB2
56	GEC2/IO185RSB2
57	IO184RSB2
58	IO183RSB2
59	IO182RSB2
60	IO181RSB2
61	IO180RSB2
62	VCCIB2
63	IO178RSB2
64	IO176RSB2
65	GND
66	IO174RSB2
67	IO172RSB2
68	IO170RSB2
69	IO168RSB2
70	IO166RSB2
71	VCC
72	VCCIB2

PQ208	
Pin Number	A3P1000 Function
73	IO162RSB2
74	IO160RSB2
75	IO158RSB2
76	IO156RSB2
77	IO154RSB2
78	IO152RSB2
79	IO150RSB2
80	IO148RSB2
81	GND
82	IO143RSB2
83	IO141RSB2
84	IO139RSB2
85	IO137RSB2
86	IO135RSB2
87	IO133RSB2
88	VCC
89	VCCIB2
90	IO128RSB2
91	IO126RSB2
92	IO124RSB2
93	IO122RSB2
94	IO120RSB2
95	IO118RSB2
96	GDC2/IO116RSB2
97	GND
98	GDB2/IO115RSB2
99	GDA2/IO114RSB2
100	GNDQ
101	TCK
102	TDI
103	TMS
104	VMV2
105	GND
106	VPUMP
107	GNDQ
108	TDO

© 2023 Microchip Technology Inc. and its subsidiaries

PQ208	
Pin Number	**A3P1000 Function**
109	TRST
110	VJTAG
111	GDA0/IO113NDB1
112	GDA1/IO113PDB1
113	GDB0/IO112NDB1
114	GDB1/IO112PDB1
115	GDC0/IO111NDB1
116	GDC1/IO111PDB1
117	IO109NDB1
118	IO109PDB1
119	IO106NDB1
120	IO106PDB1
121	IO104PSB1
122	GND
123	VCCIB1
124	IO99NDB1
125	IO99PDB1
126	NC
127	IO96NDB1
128	GCC2/IO96PDB1
129	GCB2/IO95PSB1
130	GND
131	GCA2/IO94PSB1
132	GCA1/IO93PDB1
133	GCA0/IO93NDB1
134	GCB0/IO92NDB1
135	GCB1/IO92PDB1
136	GCC0/IO91NDB1
137	GCC1/IO91PDB1
138	IO88NDB1
139	IO88PDB1
140	VCCIB1
141	GND
142	VCC
143	IO86PSB1
144	IO84NDB1

PQ208	
Pin Number	**A3P1000 Function**
145	IO84PDB1
146	IO82NDB1
147	IO82PDB1
148	IO80NDB1
149	GBC2/IO80PDB1
150	IO79NDB1
151	GBB2/IO79PDB1
152	IO78NDB1
153	GBA2/IO78PDB1
154	VMV1
155	GNDQ
156	GND
157	VMV0
158	GBA1/IO77RSB0
159	GBA0/IO76RSB0
160	GBB1/IO75RSB0
161	GBB0/IO74RSB0
162	GND
163	GBC1/IO73RSB0
164	GBC0/IO72RSB0
165	IO70RSB0
166	IO67RSB0
167	IO63RSB0
168	IO60RSB0
169	IO57RSB0
170	VCCIB0
171	VCC
172	IO54RSB0
173	IO51RSB0
174	IO48RSB0
175	IO45RSB0
176	IO42RSB0
177	IO40RSB0
178	GND
179	IO38RSB0
180	IO35RSB0

PQ208	
Pin Number	**A3P1000 Function**
181	IO33RSB0
182	IO31RSB0
183	IO29RSB0
184	IO27RSB0
185	IO25RSB0
186	VCCIB0
187	VCC
188	IO22RSB0
189	IO20RSB0
190	IO18RSB0
191	IO16RSB0
192	IO15RSB0
193	IO14RSB0
194	IO13RSB0
195	GND
196	IO12RSB0
197	IO11RSB0
198	IO10RSB0
199	IO09RSB0
200	VCCIB0
201	GAC1/IO05RSB0
202	GAC0/IO04RSB0
203	GAB1/IO03RSB0
204	GAB0/IO02RSB0
205	GAA1/IO01RSB0
206	GAA0/IO00RSB0
207	GNDQ
208	VMV0

© 2023 Microchip Technology Inc. and its subsidiaries

4.7 FG144

***FIGURE 4-7* • FG144—BOTTOMVIEW**

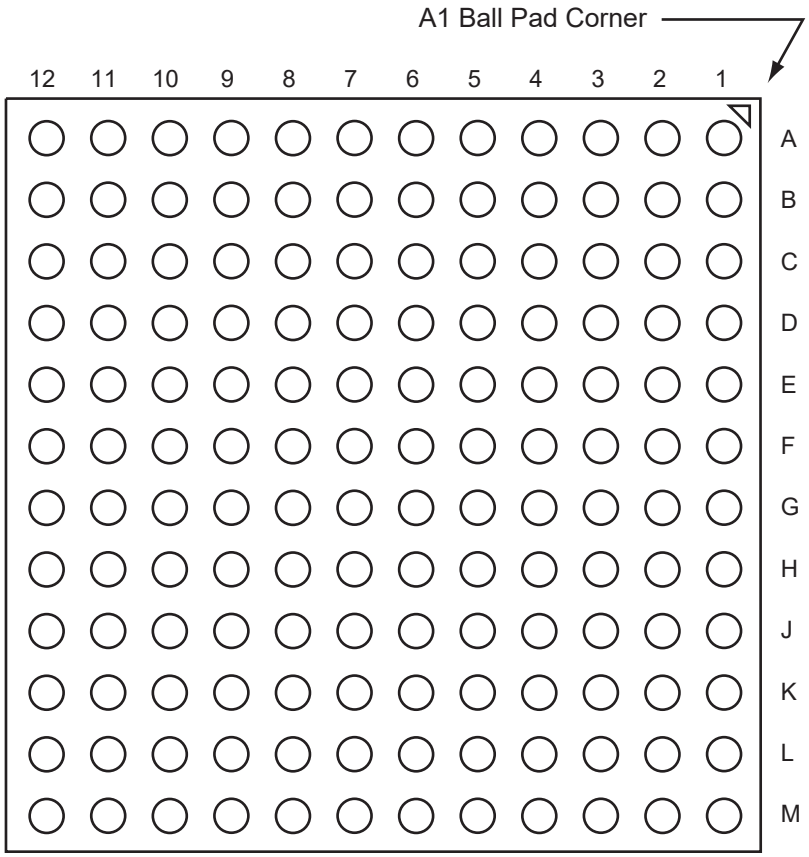

Note: For more information on package drawings, see PD3068: Package Mechanical Drawings.

© 2023 Microchip Technology Inc. and its subsidiaries

FG144	
Pin Number	A3P060 Function
A1	GNDQ
A2	VMV0
A3	GAB0/IO04RSB0
A4	GAB1/IO05RSB0
A5	IO08RSB0
A6	GND
A7	IO11RSB0
A8	VCC
A9	IO16RSB0
A10	GBA0/IO23RSB0
A11	GBA1/IO24RSB0
A12	GNDQ
B1	GAB2/IO53RSB1
B2	GND
B3	GAA0/IO02RSB0
B4	GAA1/IO03RSB0
B5	IO00RSB0
B6	IO10RSB0
B7	IO12RSB0
B8	IO14RSB0
B9	GBB0/IO21RSB0
B10	GBB1/IO22RSB0
B11	GND
B12	VMV0
C1	IO95RSB1
C2	GFA2/IO83RSB1
C3	GAC2/IO94RSB1
C4	VCC
C5	IO01RSB0
C6	IO09RSB0
C7	IO13RSB0
C8	IO15RSB0
C9	IO17RSB0
C10	GBA2/IO25RSB0
C11	IO26RSB0
C12	GBC2/IO29RSB0

FG144	
Pin Number	A3P060 Function
D1	IO91RSB1
D2	IO92RSB1
D3	IO93RSB1
D4	GAA2/IO51RSB1
D5	GAC0/IO06RSB0
D6	GAC1/IO07RSB0
D7	GBC0/IO19RSB0
D8	GBC1/IO20RSB0
D9	GBB2/IO27RSB0
D10	IO18RSB0
D11	IO28RSB0
D12	GCB1/IO37RSB0
E1	VCC
E2	GFC0/IO88RSB1
E3	GFC1/IO89RSB1
E4	VCCIB1
E5	IO52RSB1
E6	VCCIB0
E7	VCCIB0
E8	GCC1/IO35RSB0
E9	VCCIB0
E10	VCC
E11	GCA0/IO40RSB0
E12	IO30RSB0
F1	GFB0/IO86RSB1
F2	VCOMPLF
F3	GFB1/IO87RSB1
F4	IO90RSB1
F5	GND
F6	GND
F7	GND
F8	GCC0/IO36RSB0
F9	GCB0/IO38RSB0
F10	GND
F11	GCA1/IO39RSB0
F12	GCA2/IO41RSB0

FG144	
Pin Number	A3P060 Function
G1	GFA1/IO84RSB1
G2	GND
G3	VCCPLF
G4	GFA0/IO85RSB1
G5	GND
G6	GND
G7	GND
G8	GDC1/IO45RSB0
G9	IO32RSB0
G10	GCC2/IO43RSB0
G11	IO31RSB0
G12	GCB2/IO42RSB0
H1	VCC
H2	GFB2/IO82RSB1
H3	GFC2/IO81RSB1
H4	GEC1/IO77RSB1
H5	VCC
H6	IO34RSB0
H7	IO44RSB0
H8	GDB2/IO55RSB1
H9	GDC0/IO46RSB0
H10	VCCIB0
H11	IO33RSB0
H12	VCC
J1	GEB1/IO75RSB1
J2	IO78RSB1
J3	VCCIB1
J4	GEC0/IO76RSB1
J5	IO79RSB1
J6	IO80RSB1
J7	VCC
J8	TCK
J9	GDA2/IO54RSB1
J10	TDO
J11	GDA1/IO49RSB0
J12	GDB1/IO47RSB0

© 2023 Microchip Technology Inc. and its subsidiaries

FG144	
Pin Number	**A3P060 Function**
K1	GEB0/IO74RSB1
K2	GEA1/IO73RSB1
K3	GEA0/IO72RSB1
K4	GEA2/IO71RSB1
K5	IO65RSB1
K6	IO64RSB1
K7	GND
K8	IO57RSB1
K9	GDC2/IO56RSB1
K10	GND
K11	GDA0/IO50RSB0
K12	GDB0/IO48RSB0
L1	GND
L2	VMV1
L3	GEB2/IO70RSB1
L4	IO67RSB1
L5	VCCIB1
L6	IO62RSB1
L7	IO59RSB1
L8	IO58RSB1
L9	TMS
L10	VJTAG
L11	VMV1
L12	TRST
M1	GNDQ
M2	GEC2/IO69RSB1
M3	IO68RSB1
M4	IO66RSB1
M5	IO63RSB1
M6	IO61RSB1
M7	IO60RSB1
M8	NC
M9	TDI
M10	VCCIB1
M11	VPUMP
M12	GNDQ

© 2023 Microchip Technology Inc. and its subsidiaries

FG144	
Pin Number	**A3P125 Function**
A1	GNDQ
A2	VMV0
A3	GAB0/IO02RSB0
A4	GAB1/IO03RSB0
A5	IO11RSB0
A6	GND
A7	IO18RSB0
A8	VCC
A9	IO25RSB0
A10	GBA0/IO39RSB0
A11	GBA1/IO40RSB0
A12	GNDQ
B1	GAB2/IO69RSB1
B2	GND
B3	GAA0/IO00RSB0
B4	GAA1/IO01RSB0
B5	IO08RSB0
B6	IO14RSB0
B7	IO19RSB0
B8	IO22RSB0
B9	GBB0/IO37RSB0
B10	GBB1/IO38RSB0
B11	GND
B12	VMV0
C1	IO132RSB1
C2	GFA2/IO120RSB1
C3	GAC2/IO131RSB1
C4	VCC
C5	IO10RSB0
C6	IO12RSB0
C7	IO21RSB0
C8	IO24RSB0
C9	IO27RSB0
C10	GBA2/IO41RSB0
C11	IO42RSB0
C12	GBC2/IO45RSB0

FG144	
Pin Number	**A3P125 Function**
D1	IO128RSB1
D2	IO129RSB1
D3	IO130RSB1
D4	GAA2/IO67RSB1
D5	GAC0/IO04RSB0
D6	GAC1/IO05RSB0
D7	GBC0/IO35RSB0
D8	GBC1/IO36RSB0
D9	GBB2/IO43RSB0
D10	IO28RSB0
D11	IO44RSB0
D12	GCB1/IO53RSB0
E1	VCC
E2	GFC0/IO125RSB1
E3	GFC1/IO126RSB1
E4	VCCIB1
E5	IO68RSB1
E6	VCCIB0
E7	VCCIB0
E8	GCC1/IO51RSB0
E9	VCCIB0
E10	VCC
E11	GCA0/IO56RSB0
E12	IO46RSB0
F1	GFB0/IO123RSB1
F2	VCOMPLF
F3	GFB1/IO124RSB1
F4	IO127RSB1
F5	GND
F6	GND
F7	GND
F8	GCC0/IO52RSB0
F9	GCB0/IO54RSB0
F10	GND
F11	GCA1/IO55RSB0
F12	GCA2/IO57RSB0

FG144	
Pin Number	**A3P125 Function**
G1	GFA1/IO121RSB1
G2	GND
G3	VCCPLF
G4	GFA0/IO122RSB1
G5	GND
G6	GND
G7	GND
G8	GDC1/IO61RSB0
G9	IO48RSB0
G10	GCC2/IO59RSB0
G11	IO47RSB0
G12	GCB2/IO58RSB0
H1	VCC
H2	GFB2/IO119RSB1
H3	GFC2/IO118RSB1
H4	GEC1/IO112RSB1
H5	VCC
H6	IO50RSB0
H7	IO60RSB0
H8	GDB2/IO71RSB1
H9	GDC0/IO62RSB0
H10	VCCIB0
H11	IO49RSB0
H12	VCC
J1	GEB1/IO110RSB1
J2	IO115RSB1
J3	VCCIB1
J4	GEC0/IO111RSB1
J5	IO116RSB1
J6	IO117RSB1
J7	VCC
J8	TCK
J9	GDA2/IO70RSB1
J10	TDO
J11	GDA1/IO65RSB0
J12	GDB1/IO63RSB0

© 2023 Microchip Technology Inc. and its subsidiaries

FG144	
Pin Number	**A3P125 Function**
K1	GEB0/IO109RSB1
K2	GEA1/IO108RSB1
K3	GEA0/IO107RSB1
K4	GEA2/IO106RSB1
K5	IO100RSB1
K6	IO98RSB1
K7	GND
K8	IO73RSB1
K9	GDC2/IO72RSB1
K10	GND
K11	GDA0/IO66RSB0
K12	GDB0/IO64RSB0
L1	GND
L2	VMV1
L3	GEB2/IO105RSB1
L4	IO102RSB1
L5	VCCIB1
L6	IO95RSB1
L7	IO85RSB1
L8	IO74RSB1
L9	TMS
L10	VJTAG
L11	VMV1
L12	TRST
M1	GNDQ
M2	GEC2/IO104RSB1
M3	IO103RSB1
M4	IO101RSB1
M5	IO97RSB1
M6	IO94RSB1
M7	IO86RSB1
M8	IO75RSB1
M9	TDI
M10	VCCIB1
M11	VPUMP
M12	GNDQ

© 2023 Microchip Technology Inc. and its subsidiaries

FG144	
Pin Number	A3P250 Function
A1	GNDQ
A2	VMV0
A3	GAB0/IO02RSB0
A4	GAB1/IO03RSB0
A5	IO16RSB0
A6	GND
A7	IO29RSB0
A8	VCC
A9	IO33RSB0
A10	GBA0/IO39RSB0
A11	GBA1/IO40RSB0
A12	GNDQ
B1	GAB2/IO117UDB3
B2	GND
B3	GAA0/IO00RSB0
B4	GAA1/IO01RSB0
B5	IO14RSB0
B6	IO19RSB0
B7	IO22RSB0
B8	IO30RSB0
B9	GBB0/IO37RSB0
B10	GBB1/IO38RSB0
B11	GND
B12	VMV1
C1	IO117VDB3
C2	GFA2/IO107PPB3
C3	GAC2/IO116UDB3
C4	VCC
C5	IO12RSB0
C6	IO17RSB0
C7	IO24RSB0
C8	IO31RSB0
C9	IO34RSB0
C10	GBA2/IO41PDB1
C11	IO41NDB1
C12	GBC2/IO43PPB1

FG144	
Pin Number	A3P250 Function
D1	IO112NDB3
D2	IO112PDB3
D3	IO116VDB3
D4	GAA2/IO118UPB3
D5	GAC0/IO04RSB0
D6	GAC1/IO05RSB0
D7	GBC0/IO35RSB0
D8	GBC1/IO36RSB0
D9	GBB2/IO42PDB1
D10	IO42NDB1
D11	IO43NPB1
D12	GCB1/IO49PPB1
E1	VCC
E2	GFC0/IO110NDB3
E3	GFC1/IO110PDB3
E4	VCCIB3
E5	IO118VPB3
E6	VCCIB0
E7	VCCIB0
E8	GCC1/IO48PDB1
E9	VCCIB1
E10	VCC
E11	GCA0/IO50NDB1
E12	IO51NDB1
F1	GFB0/IO109NPB3
F2	VCOMPLF
F3	GFB1/IO109PPB3
F4	IO107NPB3
F5	GND
F6	GND
F7	GND
F8	GCC0/IO48NDB1
F9	GCB0/IO49NPB1
F10	GND
F11	GCA1/IO50PDB1
F12	GCA2/IO51PDB1

FG144	
Pin Number	A3P250 Function
G1	GFA1/IO108PPB3
G2	GND
G3	VCCPLF
G4	GFA0/IO108NPB3
G5	GND
G6	GND
G7	GND
G8	GDC1/IO58UPB1
G9	IO53NDB1
G10	GCC2/IO53PDB1
G11	IO52NDB1
G12	GCB2/IO52PDB1
H1	VCC
H2	GFB2/IO106PDB3
H3	GFC2/IO105PSB3
H4	GEC1/IO100PDB3
H5	VCC
H6	IO79RSB2
H7	IO65RSB2
H8	GDB2/IO62RSB2
H9	GDC0/IO58VPB1
H10	VCCIB1
H11	IO54PSB1
H12	VCC
J1	GEB1/IO99PDB3
J2	IO106NDB3
J3	VCCIB3
J4	GEC0/IO100NDB3
J5	IO88RSB2
J6	IO81RSB2
J7	VCC
J8	TCK
J9	GDA2/IO61RSB2
J10	TDO
J11	GDA1/IO60UDB1
J12	GDB1/IO59UDB1

© 2023 Microchip Technology Inc. and its subsidiaries

FG144	
Pin Number	**A3P250 Function**
K1	GEB0/IO99NDB3
K2	GEA1/IO98PDB3
K3	GEA0/IO98NDB3
K4	GEA2/IO97RSB2
K5	IO90RSB2
K6	IO84RSB2
K7	GND
K8	IO66RSB2
K9	GDC2/IO63RSB2
K10	GND
K11	GDA0/IO60VDB1
K12	GDB0/IO59VDB1
L1	GND
L2	VMV3
L3	GEB2/IO96RSB2
L4	IO91RSB2
L5	VCCIB2
L6	IO82RSB2
L7	IO80RSB2
L8	IO72RSB2
L9	TMS
L10	VJTAG
L11	VMV2
L12	TRST
M1	GNDQ
M2	GEC2/IO95RSB2
M3	IO92RSB2
M4	IO89RSB2
M5	IO87RSB2
M6	IO85RSB2
M7	IO78RSB2
M8	IO76RSB2
M9	TDI
M10	VCCIB2
M11	VPUMP
M12	GNDQ

© 2023 Microchip Technology Inc. and its subsidiaries

FG144	
Pin Number	A3P400 Function
A1	GNDQ
A2	VMV0
A3	GAB0/IO02RSB0
A4	GAB1/IO03RSB0
A5	IO16RSB0
A6	GND
A7	IO30RSB0
A8	VCC
A9	IO34RSB0
A10	GBA0/IO58RSB0
A11	GBA1/IO59RSB0
A12	GNDQ
B1	GAB2/IO154UDB3
B2	GND
B3	GAA0/IO00RSB0
B4	GAA1/IO01RSB0
B5	IO14RSB0
B6	IO19RSB0
B7	IO23RSB0
B8	IO31RSB0
B9	GBB0/IO56RSB0
B10	GBB1/IO57RSB0
B11	GND
B12	VMV1
C1	IO154VDB3
C2	GFA2/IO144PPB3
C3	GAC2/IO153UDB3
C4	VCC
C5	IO12RSB0
C6	IO17RSB0
C7	IO25RSB0
C8	IO32RSB0
C9	IO53RSB0
C10	GBA2/IO60PDB1
C11	IO60NDB1
C12	GBC2/IO62PPB1

FG144	
Pin Number	A3P400 Function
D1	IO149NDB3
D2	IO149PDB3
D3	IO153VDB3
D4	GAA2/IO155UPB3
D5	GAC0/IO04RSB0
D6	GAC1/IO05RSB0
D7	GBC0/IO54RSB0
D8	GBC1/IO55RSB0
D9	GBB2/IO61PDB1
D10	IO61NDB1
D11	IO62NPB1
D12	GCB1/IO68PPB1
E1	VCC
E2	GFC0/IO147NDB3
E3	GFC1/IO147PDB3
E4	VCCIB3
E5	IO155VPB3
E6	VCCIB0
E7	VCCIB0
E8	GCC1/IO67PDB1
E9	VCCIB1
E10	VCC
E11	GCA0/IO69NDB1
E12	IO70NDB1
F1	GFB0/IO146NPB3
F2	VCOMPLF
F3	GFB1/IO146PPB3
F4	IO144NPB3
F5	GND
F6	GND
F7	GND
F8	GCC0/IO67NDB1
F9	GCB0/IO68NPB1
F10	GND
F11	GCA1/IO69PDB1
F12	GCA2/IO70PDB1

FG144	
Pin Number	A3P400 Function
G1	GFA1/IO145PPB3
G2	GND
G3	VCCPLF
G4	GFA0/IO145NPB3
G5	GND
G6	GND
G7	GND
G8	GDC1/IO77UPB1
G9	IO72NDB1
G10	GCC2/IO72PDB1
G11	IO71NDB1
G12	GCB2/IO71PDB1
H1	VCC
H2	GFB2/IO143PDB3
H3	GFC2/IO142PSB3
H4	GEC1/IO137PDB3
H5	VCC
H6	IO75PDB1
H7	IO75NDB1
H8	GDB2/IO81RSB2
H9	GDC0/IO77VPB1
H10	VCCIB1
H11	IO73PSB1
H12	VCC
J1	GEB1/IO136PDB3
J2	IO143NDB3
J3	VCCIB3
J4	GEC0/IO137NDB3
J5	IO125RSB2
J6	IO116RSB2
J7	VCC
J8	TCK
J9	GDA2/IO80RSB2
J10	TDO
J11	GDA1/IO79UDB1
J12	GDB1/IO78UDB1

© 2023 Microchip Technology Inc. and its subsidiaries

FG144	
Pin Number	**A3P400 Function**
K1	GEB0/IO136NDB3
K2	GEA1/IO135PDB3
K3	GEA0/IO135NDB3
K4	GEA2/IO134RSB2
K5	IO127RSB2
K6	IO121RSB2
K7	GND
K8	IO104RSB2
K9	GDC2/IO82RSB2
K10	GND
K11	GDA0/IO79VDB1
K12	GDB0/IO78VDB1
L1	GND
L2	VMV3
L3	GEB2/IO133RSB2
L4	IO128RSB2
L5	VCCIB2
L6	IO119RSB2
L7	IO114RSB2
L8	IO110RSB2
L9	TMS
L10	VJTAG
L11	VMV2
L12	TRST
M1	GNDQ
M2	GEC2/IO132RSB2
M3	IO129RSB2
M4	IO126RSB2
M5	IO124RSB2
M6	IO122RSB2
M7	IO117RSB2
M8	IO115RSB2
M9	TDI
M10	VCCIB2
M11	VPUMP
M12	GNDQ

© 2023 Microchip Technology Inc. and its subsidiaries

FG144	
Pin Number	**A3P600 Function**
A1	GNDQ
A2	VMV0
A3	GAB0/IO02RSB0
A4	GAB1/IO03RSB0
A5	IO10RSB0
A6	GND
A7	IO34RSB0
A8	VCC
A9	IO50RSB0
A10	GBA0/IO58RSB0
A11	GBA1/IO59RSB0
A12	GNDQ
B1	GAB2/IO173PDB3
B2	GND
B3	GAA0/IO00RSB0
B4	GAA1/IO01RSB0
B5	IO13RSB0
B6	IO19RSB0
B7	IO31RSB0
B8	IO39RSB0
B9	GBB0/IO56RSB0
B10	GBB1/IO57RSB0
B11	GND
B12	VMV1
C1	IO173NDB3
C2	GFA2/IO161PPB3
C3	GAC2/IO172PDB3
C4	VCC
C5	IO16RSB0
C6	IO25RSB0
C7	IO28RSB0
C8	IO42RSB0
C9	IO45RSB0
C10	GBA2/IO60PDB1
C11	IO60NDB1
C12	GBC2/IO62PPB1

FG144	
Pin Number	**A3P600 Function**
D1	IO169PDB3
D2	IO169NDB3
D3	IO172NDB3
D4	GAA2/IO174PPB3
D5	GAC0/IO04RSB0
D6	GAC1/IO05RSB0
D7	GBC0/IO54RSB0
D8	GBC1/IO55RSB0
D9	GBB2/IO61PDB1
D10	IO61NDB1
D11	IO62NPB1
D12	GCB1/IO70PPB1
E1	VCC
E2	GFC0/IO164NDB3
E3	GFC1/IO164PDB3
E4	VCCIB3
E5	IO174NPB3
E6	VCCIB0
E7	VCCIB0
E8	GCC1/IO69PDB1
E9	VCCIB1
E10	VCC
E11	GCA0/IO71NDB1
E12	IO72NDB1
F1	GFB0/IO163NPB3
F2	VCOMPLF
F3	GFB1/IO163PPB3
F4	IO161NPB3
F5	GND
F6	GND
F7	GND
F8	GCC0/IO69NDB1
F9	GCB0/IO70NPB1
F10	GND
F11	GCA1/IO71PDB1
F12	GCA2/IO72PDB1

FG144	
Pin Number	**A3P600 Function**
G1	GFA1/IO162PPB3
G2	GND
G3	VCCPLF
G4	GFA0/IO162NPB3
G5	GND
G6	GND
G7	GND
G8	GDC1/IO86PPB1
G9	IO74NDB1
G10	GCC2/IO74PDB1
G11	IO73NDB1
G12	GCB2/IO73PDB1
H1	VCC
H2	GFB2/IO160PDB3
H3	GFC2/IO159PSB3
H4	GEC1/IO146PDB3
H5	VCC
H6	IO80PDB1
H7	IO80NDB1
H8	GDB2/IO90RSB2
H9	GDC0/IO86NPB1
H10	VCCIB1
H11	IO84PSB1
H12	VCC
J1	GEB1/IO145PDB3
J2	IO160NDB3
J3	VCCIB3
J4	GEC0/IO146NDB3
J5	IO129RSB2
J6	IO131RSB2
J7	VCC
J8	TCK
J9	GDA2/IO89RSB2
J10	TDO
J11	GDA1/IO88PDB1
J12	GDB1/IO87PDB1

© 2023 Microchip Technology Inc. and its subsidiaries

FG144	
Pin Number	**A3P600 Function**
K1	GEB0/IO145NDB3
K2	GEA1/IO144PDB3
K3	GEA0/IO144NDB3
K4	GEA2/IO143RSB2
K5	IO119RSB2
K6	IO111RSB2
K7	GND
K8	IO94RSB2
K9	GDC2/IO91RSB2
K10	GND
K11	GDA0/IO88NDB1
K12	GDB0/IO87NDB1
L1	GND
L2	VMV3
L3	GEB2/IO142RSB2
L4	IO136RSB2
L5	VCCIB2
L6	IO115RSB2
L7	IO103RSB2
L8	IO97RSB2
L9	TMS
L10	VJTAG
L11	VMV2
L12	TRST
M1	GNDQ
M2	GEC2/IO141RSB2
M3	IO138RSB2
M4	IO123RSB2
M5	IO126RSB2
M6	IO134RSB2
M7	IO108RSB2
M8	IO99RSB2
M9	TDI
M10	VCCIB2
M11	VPUMP
M12	GNDQ

© 2023 Microchip Technology Inc. and its subsidiaries

FG144	
Pin Number	**A3P1000 Function**
A1	GNDQ
A2	VMV0
A3	GAB0/IO02RSB0
A4	GAB1/IO03RSB0
A5	IO10RSB0
A6	GND
A7	IO44RSB0
A8	VCC
A9	IO69RSB0
A10	GBA0/IO76RSB0
A11	GBA1/IO77RSB0
A12	GNDQ
B1	GAB2/IO224PDB3
B2	GND
B3	GAA0/IO00RSB0
B4	GAA1/IO01RSB0
B5	IO13RSB0
B6	IO26RSB0
B7	IO35RSB0
B8	IO60RSB0
B9	GBB0/IO74RSB0
B10	GBB1/IO75RSB0
B11	GND
B12	VMV1
C1	IO224NDB3
C2	GFA2/IO206PPB3
C3	GAC2/IO223PDB3
C4	VCC
C5	IO16RSB0
C6	IO29RSB0
C7	IO32RSB0
C8	IO63RSB0
C9	IO66RSB0
C10	GBA2/IO78PDB1
C11	IO78NDB1
C12	GBC2/IO80PPB1

FG144	
Pin Number	**A3P1000 Function**
D1	IO213PDB3
D2	IO213NDB3
D3	IO223NDB3
D4	GAA2/IO225PPB3
D5	GAC0/IO04RSB0
D6	GAC1/IO05RSB0
D7	GBC0/IO72RSB0
D8	GBC1/IO73RSB0
D9	GBB2/IO79PDB1
D10	IO79NDB1
D11	IO80NPB1
D12	GCB1/IO92PPB1
E1	VCC
E2	GFC0/IO209NDB3
E3	GFC1/IO209PDB3
E4	VCCIB3
E5	IO225NPB3
E6	VCCIB0
E7	VCCIB0
E8	GCC1/IO91PDB1
E9	VCCIB1
E10	VCC
E11	GCA0/IO93NDB1
E12	IO94NDB1
F1	GFB0/IO208NPB3
F2	VCOMPLF
F3	GFB1/IO208PPB3
F4	IO206NPB3
F5	GND
F6	GND
F7	GND
F8	GCC0/IO91NDB1
F9	GCB0/IO92NPB1
F10	GND
F11	GCA1/IO93PDB1
F12	GCA2/IO94PDB1

FG144	
Pin Number	**A3P1000 Function**
G1	GFA1/IO207PPB3
G2	GND
G3	VCCPLF
G4	GFA0/IO207NPB3
G5	GND
G6	GND
G7	GND
G8	GDC1/IO111PPB1
G9	IO96NDB1
G10	GCC2/IO96PDB1
G11	IO95NDB1
G12	GCB2/IO95PDB1
H1	VCC
H2	GFB2/IO205PDB3
H3	GFC2/IO204PSB3
H4	GEC1/IO190PDB3
H5	VCC
H6	IO105PDB1
H7	IO105NDB1
H8	GDB2/IO115RSB2
H9	GDC0/IO111NPB1
H10	VCCIB1
H11	IO101PSB1
H12	VCC
J1	GEB1/IO189PDB3
J2	IO205NDB3
J3	VCCIB3
J4	GEC0/IO190NDB3
J5	IO160RSB2
J6	IO157RSB2
J7	VCC
J8	TCK
J9	GDA2/IO114RSB2
J10	TDO
J11	GDA1/IO113PDB1
J12	GDB1/IO112PDB1

© 2023 Microchip Technology Inc. and its subsidiaries

FG144	
Pin Number	**A3P1000 Function**
K1	GEB0/IO189NDB3
K2	GEA1/IO188PDB3
K3	GEA0/IO188NDB3
K4	GEA2/IO187RSB2
K5	IO169RSB2
K6	IO152RSB2
K7	GND
K8	IO117RSB2
K9	GDC2/IO116RSB2
K10	GND
K11	GDA0/IO113NDB1
K12	GDB0/IO112NDB1
L1	GND
L2	VMV3
L3	GEB2/IO186RSB2
L4	IO172RSB2
L5	VCCIB2
L6	IO153RSB2
L7	IO144RSB2
L8	IO140RSB2
L9	TMS
L10	VJTAG
L11	VMV2
L12	TRST
M1	GNDQ
M2	GEC2/IO185RSB2
M3	IO173RSB2
M4	IO168RSB2
M5	IO161RSB2
M6	IO156RSB2
M7	IO145RSB2
M8	IO141RSB2
M9	TDI
M10	VCCIB2
M11	VPUMP
M12	GNDQ

© 2023 Microchip Technology Inc. and its subsidiaries

4.8 FG256

FIGURE 4-8 **• FG256—BOTTOM VIEW**

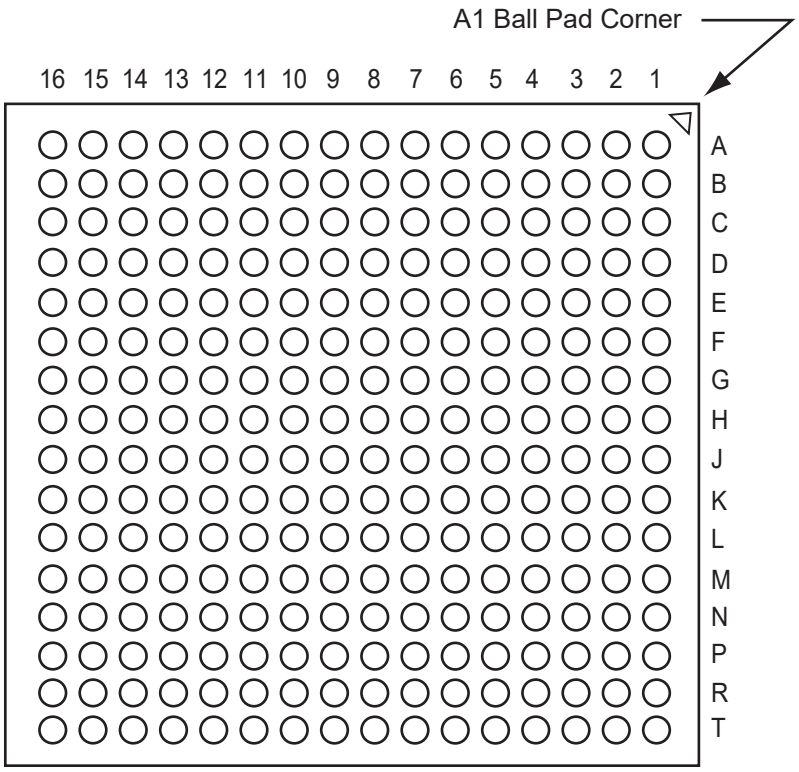

Note: For more information on package drawings, see PD3068: Package Mechanical Drawings.

FG256	
Pin Number	A3P250 Function
A1	GND
A2	GAA0/IO00RSB0
A3	GAA1/IO01RSB0
A4	GAB0/IO02RSB0
A5	IO07RSB0
A6	IO10RSB0
A7	IO11RSB0
A8	IO15RSB0
A9	IO20RSB0
A10	IO25RSB0
A11	IO29RSB0
A12	IO33RSB0
A13	GBB1/IO38RSB0
A14	GBA0/IO39RSB0
A15	GBA1/IO40RSB0
A16	GND
B1	GAB2/IO117UDB3
B2	GAA2/IO118UDB3
B3	NC
B4	GAB1/IO03RSB0
B5	IO06RSB0
B6	IO09RSB0
B7	IO12RSB0
B8	IO16RSB0
B9	IO21RSB0
B10	IO26RSB0
B11	IO30RSB0
B12	GBC1/IO36RSB0
B13	GBB0/IO37RSB0
B14	NC
B15	GBA2/IO41PDB1
B16	IO41NDB1
C1	IO117VDB3
C2	IO118VDB3
C3	NC
C4	NC

FG256	
Pin Number	A3P250 Function
C5	GAC0/IO04RSB0
C6	GAC1/IO05RSB0
C7	IO13RSB0
C8	IO17RSB0
C9	IO22RSB0
C10	IO27RSB0
C11	IO31RSB0
C12	GBC0/IO35RSB0
C13	IO34RSB0
C14	NC
C15	IO42NPB1
C16	IO44PDB1
D1	IO114VDB3
D2	IO114UDB3
D3	GAC2/IO116UDB3
D4	NC
D5	GNDQ
D6	IO08RSB0
D7	IO14RSB0
D8	IO18RSB0
D9	IO23RSB0
D10	IO28RSB0
D11	IO32RSB0
D12	GNDQ
D13	NC
D14	GBB2/IO42PPB1
D15	NC
D16	IO44NDB1
E1	IO113PDB3
E2	NC
E3	IO116VDB3
E4	IO115UDB3
E5	VMV0
E6	VCCIB0
E7	VCCIB0
E8	IO19RSB0

FG256	
Pin Number	A3P250 Function
E9	IO24RSB0
E10	VCCIB0
E11	VCCIB0
E12	VMV1
E13	GBC2/IO43PDB1
E14	IO46RSB1
E15	NC
E16	IO45PDB1
F1	IO113NDB3
F2	IO112PPB3
F3	NC
F4	IO115VDB3
F5	VCCIB3
F6	GND
F7	VCC
F8	VCC
F9	VCC
F10	VCC
F11	GND
F12	VCCIB1
F13	IO43NDB1
F14	NC
F15	IO47PPB1
F16	IO45NDB1
G1	IO111NDB3
G2	IO111PDB3
G3	IO112NPB3
G4	GFC1/IO110PPB3
G5	VCCIB3
G6	VCC
G7	GND
G8	GND
G9	GND
G10	GND
G11	VCC
G12	VCCIB1

© 2023 Microchip Technology Inc. and its subsidiaries

FG256	
Pin Number	A3P250 Function
G13	GCC1/IO48PPB1
G14	IO47NPB1
G15	IO54PDB1
G16	IO54NDB1
H1	GFB0/IO109NPB3
H2	GFA0/IO108NDB3
H3	GFB1/IO109PPB3
H4	VCOMPLF
H5	GFC0/IO110NPB3
H6	VCC
H7	GND
H8	GND
H9	GND
H10	GND
H11	VCC
H12	GCC0/IO48NPB1
H13	GCB1/IO49PPB1
H14	GCA0/IO50NPB1
H15	NC
H16	GCB0/IO49NPB1
J1	GFA2/IO107PPB3
J2	GFA1/IO108PDB3
J3	VCCPLF
J4	IO106NDB3
J5	GFB2/IO106PDB3
J6	VCC
J7	GND
J8	GND
J9	GND
J10	GND
J11	VCC
J12	GCB2/IO52PPB1
J13	GCA1/IO50PPB1
J14	GCC2/IO53PPB1
J15	NC
J16	GCA2/IO51PDB1

FG256	
Pin Number	A3P250 Function
K1	GFC2/IO105PDB3
K2	IO107NPB3
K3	IO104PPB3
K4	NC
K5	VCCIB3
K6	VCC
K7	GND
K8	GND
K9	GND
K10	GND
K11	VCC
K12	VCCIB1
K13	IO52NPB1
K14	IO55RSB1
K15	IO53NPB1
K16	IO51NDB1
L1	IO105NDB3
L2	IO104NPB3
L3	NC
L4	IO102RSB3
L5	VCCIB3
L6	GND
L7	VCC
L8	VCC
L9	VCC
L10	VCC
L11	GND
L12	VCCIB1
L13	GDB0/IO59VPB1
L14	IO57VDB1
L15	IO57UDB1
L16	IO56PDB1
M1	IO103PDB3
M2	NC
M3	IO101NPB3
M4	GEC0/IO100NPB3

FG256	
Pin Number	A3P250 Function
M5	VMV3
M6	VCCIB2
M7	VCCIB2
M8	NC
M9	IO74RSB2
M10	VCCIB2
M11	VCCIB2
M12	VMV2
M13	NC
M14	GDB1/IO59UPB1
M15	GDC1/IO58UDB1
M16	IO56NDB1
N1	IO103NDB3
N2	IO101PPB3
N3	GEC1/IO100PPB3
N4	NC
N5	GNDQ
N6	GEA2/IO97RSB2
N7	IO86RSB2
N8	IO82RSB2
N9	IO75RSB2
N10	IO69RSB2
N11	IO64RSB2
N12	GNDQ
N13	NC
N14	VJTAG
N15	GDC0/IO58VDB1
N16	GDA1/IO60UDB1
P1	GEB1/IO99PDB3
P2	GEB0/IO99NDB3
P3	NC
P4	NC
P5	IO92RSB2
P6	IO89RSB2
P7	IO85RSB2
P8	IO81RSB2

© 2023 Microchip Technology Inc. and its subsidiaries

FG256	
Pin Number	**A3P250 Function**
P9	IO76RSB2
P10	IO71RSB2
P11	IO66RSB2
P12	NC
P13	TCK
P14	VPUMP
P15	TRST
P16	GDA0/IO60VDB1
R1	GEA1/IO98PDB3
R2	GEA0/IO98NDB3
R3	NC
R4	GEC2/IO95RSB2
R5	IO91RSB2
R6	IO88RSB2
R7	IO84RSB2
R8	IO80RSB2
R9	IO77RSB2
R10	IO72RSB2
R11	IO68RSB2
R12	IO65RSB2
R13	GDB2/IO62RSB2
R14	TDI
R15	NC
R16	TDO
T1	GND
T2	IO94RSB2
T3	GEB2/IO96RSB2
T4	IO93RSB2
T5	IO90RSB2
T6	IO87RSB2
T7	IO83RSB2
T8	IO79RSB2
T9	IO78RSB2
T10	IO73RSB2
T11	IO70RSB2
T12	GDC2/IO63RSB2

FG256	
Pin Number	**A3P250 Function**
T13	IO67RSB2
T14	GDA2/IO61RSB2
T15	TMS
T16	GND

© 2023 Microchip Technology Inc. and its subsidiaries

FG256	
Pin Number	A3P400 Function
A1	GND
A2	GAA0/IO00RSB0
A3	GAA1/IO01RSB0
A4	GAB0/IO02RSB0
A5	IO16RSB0
A6	IO17RSB0
A7	IO22RSB0
A8	IO28RSB0
A9	IO34RSB0
A10	IO37RSB0
A11	IO41RSB0
A12	IO43RSB0
A13	GBB1/IO57RSB0
A14	GBA0/IO58RSB0
A15	GBA1/IO59RSB0
A16	GND
B1	GAB2/IO154UDB3
B2	GAA2/IO155UDB3
B3	IO12RSB0
B4	GAB1/IO03RSB0
B5	IO13RSB0
B6	IO14RSB0
B7	IO21RSB0
B8	IO27RSB0
B9	IO32RSB0
B10	IO38RSB0
B11	IO42RSB0
B12	GBC1/IO55RSB0
B13	GBB0/IO56RSB0
B14	IO44RSB0
B15	GBA2/IO60PDB1
B16	IO60NDB1
C1	IO154VDB3
C2	IO155VDB3
C3	IO11RSB0
C4	IO07RSB0

FG256	
Pin Number	A3P400 Function
C5	GAC0/IO04RSB0
C6	GAC1/IO05RSB0
C7	IO20RSB0
C8	IO24RSB0
C9	IO33RSB0
C10	IO39RSB0
C11	IO45RSB0
C12	GBC0/IO54RSB0
C13	IO48RSB0
C14	VMV0
C15	IO61NPB1
C16	IO63PDB1
D1	IO151VDB3
D2	IO151UDB3
D3	GAC2/IO153UDB3
D4	IO06RSB0
D5	GNDQ
D6	IO10RSB0
D7	IO19RSB0
D8	IO26RSB0
D9	IO30RSB0
D10	IO40RSB0
D11	IO46RSB0
D12	GNDQ
D13	IO47RSB0
D14	GBB2/IO61PPB1
D15	IO53RSB0
D16	IO63NDB1
E1	IO150PDB3
E2	IO08RSB0
E3	IO153VDB3
E4	IO152VDB3
E5	VMV0
E6	VCCIB0
E7	VCCIB0
E8	IO25RSB0

FG256	
Pin Number	A3P400 Function
E9	IO31RSB0
E10	VCCIB0
E11	VCCIB0
E12	VMV1
E13	GBC2/IO62PDB1
E14	IO65RSB1
E15	IO52RSB0
E16	IO66PDB1
F1	IO150NDB3
F2	IO149NPB3
F3	IO09RSB0
F4	IO152UDB3
F5	VCCIB3
F6	GND
F7	VCC
F8	VCC
F9	VCC
F10	VCC
F11	GND
F12	VCCIB1
F13	IO62NDB1
F14	IO49RSB0
F15	IO64PPB1
F16	IO66NDB1
G1	IO148NDB3
G2	IO148PDB3
G3	IO149PPB3
G4	GFC1/IO147PPB3
G5	VCCIB3
G6	VCC
G7	GND
G8	GND
G9	GND
G10	GND
G11	VCC
G12	VCCIB1

© 2023 Microchip Technology Inc. and its subsidiaries

FG256	
Pin Number	A3P400 Function
G13	GCC1/IO67PPB1
G14	IO64NPB1
G15	IO73PDB1
G16	IO73NDB1
H1	GFB0/IO146NPB3
H2	GFA0/IO145NDB3
H3	GFB1/IO146PPB3
H4	VCOMPLF
H5	GFC0/IO147NPB3
H6	VCC
H7	GND
H8	GND
H9	GND
H10	GND
H11	VCC
H12	GCC0/IO67NPB1
H13	GCB1/IO68PPB1
H14	GCA0/IO69NPB1
H15	NC
H16	GCB0/IO68NPB1
J1	GFA2/IO144PPB3
J2	GFA1/IO145PDB3
J3	VCCPLF
J4	IO143NDB3
J5	GFB2/IO143PDB3
J6	VCC
J7	GND
J8	GND
J9	GND
J10	GND
J11	VCC
J12	GCB2/IO71PPB1
J13	GCA1/IO69PPB1
J14	GCC2/IO72PPB1
J15	NC
J16	GCA2/IO70PDB1

FG256	
Pin Number	A3P400 Function
K1	GFC2/IO142PDB3
K2	IO144NPB3
K3	IO141PPB3
K4	IO120RSB2
K5	VCCIB3
K6	VCC
K7	GND
K8	GND
K9	GND
K10	GND
K11	VCC
K12	VCCIB1
K13	IO71NPB1
K14	IO74RSB1
K15	IO72NPB1
K16	IO70NDB1
L1	IO142NDB3
L2	IO141NPB3
L3	IO125RSB2
L4	IO139RSB3
L5	VCCIB3
L6	GND
L7	VCC
L8	VCC
L9	VCC
L10	VCC
L11	GND
L12	VCCIB1
L13	GDB0/IO78VPB1
L14	IO76VDB1
L15	IO76UDB1
L16	IO75PDB1
M1	IO140PDB3
M2	IO130RSB2
M3	IO138NPB3
M4	GEC0/IO137NPB3

FG256	
Pin Number	A3P400 Function
M5	VMV3
M6	VCCIB2
M7	VCCIB2
M8	IO108RSB2
M9	IO101RSB2
M10	VCCIB2
M11	VCCIB2
M12	VMV2
M13	IO83RSB2
M14	GDB1/IO78UPB1
M15	GDC1/IO77UDB1
M16	IO75NDB1
N1	IO140NDB3
N2	IO138PPB3
N3	GEC1/IO137PPB3
N4	IO131RSB2
N5	GNDQ
N6	GEA2/IO134RSB2
N7	IO117RSB2
N8	IO111RSB2
N9	IO99RSB2
N10	IO94RSB2
N11	IO87RSB2
N12	GNDQ
N13	IO93RSB2
N14	VJTAG
N15	GDC0/IO77VDB1
N16	GDA1/IO79UDB1
P1	GEB1/IO136PDB3
P2	GEB0/IO136NDB3
P3	VMV2
P4	IO129RSB2
P5	IO128RSB2
P6	IO122RSB2
P7	IO115RSB2
P8	IO110RSB2

© 2023 Microchip Technology Inc. and its subsidiaries

FG256	
Pin Number	**A3P400 Function**
P9	IO98RSB2
P10	IO95RSB2
P11	IO88RSB2
P12	IO84RSB2
P13	TCK
P14	VPUMP
P15	TRST
P16	GDA0/IO79VDB1
R1	GEA1/IO135PDB3
R2	GEA0/IO135NDB3
R3	IO127RSB2
R4	GEC2/IO132RSB2
R5	IO123RSB2
R6	IO118RSB2
R7	IO112RSB2
R8	IO106RSB2
R9	IO100RSB2
R10	IO96RSB2
R11	IO89RSB2
R12	IO85RSB2
R13	GDB2/IO81RSB2
R14	TDI
R15	NC
R16	TDO
T1	GND
T2	IO126RSB2
T3	GEB2/IO133RSB2
T4	IO124RSB2
T5	IO116RSB2
T6	IO113RSB2
T7	IO107RSB2
T8	IO105RSB2
T9	IO102RSB2
T10	IO97RSB2
T11	IO92RSB2
T12	GDC2/IO82RSB2

FG256	
Pin Number	**A3P400 Function**
T13	IO86RSB2
T14	GDA2/IO80RSB2
T15	TMS
T16	GND

© 2023 Microchip Technology Inc. and its subsidiaries

FG256	
Pin Number	A3P600 Function
A1	GND
A2	GAA0/IO00RSB0
A3	GAA1/IO01RSB0
A4	GAB0/IO02RSB0
A5	IO11RSB0
A6	IO16RSB0
A7	IO18RSB0
A8	IO28RSB0
A9	IO34RSB0
A10	IO37RSB0
A11	IO41RSB0
A12	IO43RSB0
A13	GBB1/IO57RSB0
A14	GBA0/IO58RSB0
A15	GBA1/IO59RSB0
A16	GND
B1	GAB2/IO173PDB3
B2	GAA2/IO174PDB3
B3	GNDQ
B4	GAB1/IO03RSB0
B5	IO13RSB0
B6	IO14RSB0
B7	IO21RSB0
B8	IO27RSB0
B9	IO32RSB0
B10	IO38RSB0
B11	IO42RSB0
B12	GBC1/IO55RSB0
B13	GBB0/IO56RSB0
B14	IO52RSB0
B15	GBA2/IO60PDB1
B16	IO60NDB1
C1	IO173NDB3
C2	IO174NDB3
C3	VMV3
C4	IO07RSB0

FG256	
Pin Number	A3P600 Function
C5	GAC0/IO04RSB0
C6	GAC1/IO05RSB0
C7	IO20RSB0
C8	IO24RSB0
C9	IO33RSB0
C10	IO39RSB0
C11	IO44RSB0
C12	GBC0/IO54RSB0
C13	IO51RSB0
C14	VMV0
C15	IO61NPB1
C16	IO63PDB1
D1	IO171NDB3
D2	IO171PDB3
D3	GAC2/IO172PDB3
D4	IO06RSB0
D5	GNDQ
D6	IO10RSB0
D7	IO19RSB0
D8	IO26RSB0
D9	IO30RSB0
D10	IO40RSB0
D11	IO45RSB0
D12	GNDQ
D13	IO50RSB0
D14	GBB2/IO61PPB1
D15	IO53RSB0
D16	IO63NDB1
E1	IO166PDB3
E2	IO167NPB3
E3	IO172NDB3
E4	IO169NDB3
E5	VMV0
E6	VCCIB0
E7	VCCIB0
E8	IO25RSB0

FG256	
Pin Number	A3P600 Function
E9	IO31RSB0
E10	VCCIB0
E11	VCCIB0
E12	VMV1
E13	GBC2/IO62PDB1
E14	IO67PPB1
E15	IO64PPB1
E16	IO66PDB1
F1	IO166NDB3
F2	IO168NPB3
F3	IO167PPB3
F4	IO169PDB3
F5	VCCIB3
F6	GND
F7	VCC
F8	VCC
F9	VCC
F10	VCC
F11	GND
F12	VCCIB1
F13	IO62NDB1
F14	IO64NPB1
F15	IO65PPB1
F16	IO66NDB1
G1	IO165NDB3
G2	IO165PDB3
G3	IO168PPB3
G4	GFC1/IO164PPB3
G5	VCCIB3
G6	VCC
G7	GND
G8	GND
G9	GND
G10	GND
G11	VCC
G12	VCCIB1

© 2023 Microchip Technology Inc. and its subsidiaries

FG256	
Pin Number	A3P600 Function
G13	GCC1/IO69PPB1
G14	IO65NPB1
G15	IO75PDB1
G16	IO75NDB1
H1	GFB0/IO163NPB3
H2	GFA0/IO162NDB3
H3	GFB1/IO163PPB3
H4	VCOMPLF
H5	GFC0/IO164NPB3
H6	VCC
H7	GND
H8	GND
H9	GND
H10	GND
H11	VCC
H12	GCC0/IO69NPB1
H13	GCB1/IO70PPB1
H14	GCA0/IO71NPB1
H15	IO67NPB1
H16	GCB0/IO70NPB1
J1	GFA2/IO161PPB3
J2	GFA1/IO162PDB3
J3	VCCPLF
J4	IO160NDB3
J5	GFB2/IO160PDB3
J6	VCC
J7	GND
J8	GND
J9	GND
J10	GND
J11	VCC
J12	GCB2/IO73PPB1
J13	GCA1/IO71PPB1
J14	GCC2/IO74PPB1
J15	IO80PPB1
J16	GCA2/IO72PDB1

FG256	
Pin Number	A3P600 Function
K1	GFC2/IO159PDB3
K2	IO161NPB3
K3	IO156PPB3
K4	IO129RSB2
K5	VCCIB3
K6	VCC
K7	GND
K8	GND
K9	GND
K10	GND
K11	VCC
K12	VCCIB1
K13	IO73NPB1
K14	IO80NPB1
K15	IO74NPB1
K16	IO72NDB1
L1	IO159NDB3
L2	IO156NPB3
L3	IO151PPB3
L4	IO158PSB3
L5	VCCIB3
L6	GND
L7	VCC
L8	VCC
L9	VCC
L10	VCC
L11	GND
L12	VCCIB1
L13	GDB0/IO87NPB1
L14	IO85NDB1
L15	IO85PDB1
L16	IO84PDB1
M1	IO150PDB3
M2	IO151NPB3
M3	IO147NPB3
M4	GEC0/IO146NPB3

FG256	
Pin Number	A3P600 Function
M5	VMV3
M6	VCCIB2
M7	VCCIB2
M8	IO117RSB2
M9	IO110RSB2
M10	VCCIB2
M11	VCCIB2
M12	VMV2
M13	IO94RSB2
M14	GDB1/IO87PPB1
M15	GDC1/IO86PDB1
M16	IO84NDB1
N1	IO150NDB3
N2	IO147PPB3
N3	GEC1/IO146PPB3
N4	IO140RSB2
N5	GNDQ
N6	GEA2/IO143RSB2
N7	IO126RSB2
N8	IO120RSB2
N9	IO108RSB2
N10	IO103RSB2
N11	IO99RSB2
N12	GNDQ
N13	IO92RSB2
N14	VJTAG
N15	GDC0/IO86NDB1
N16	GDA1/IO88PDB1
P1	GEB1/IO145PDB3
P2	GEB0/IO145NDB3
P3	VMV2
P4	IO138RSB2
P5	IO136RSB2
P6	IO131RSB2
P7	IO124RSB2
P8	IO119RSB2

© 2023 Microchip Technology Inc. and its subsidiaries

FG256	
Pin Number	**A3P600 Function**
P9	IO107RSB2
P10	IO104RSB2
P11	IO97RSB2
P12	VMV1
P13	TCK
P14	VPUMP
P15	TRST
P16	GDA0/IO88NDB1
R1	GEA1/IO144PDB3
R2	GEA0/IO144NDB3
R3	IO139RSB2
R4	GEC2/IO141RSB2
R5	IO132RSB2
R6	IO127RSB2
R7	IO121RSB2
R8	IO114RSB2
R9	IO109RSB2
R10	IO105RSB2
R11	IO98RSB2
R12	IO96RSB2
R13	GDB2/IO90RSB2
R14	TDI
R15	GNDQ
R16	TDO
T1	GND
T2	IO137RSB2
T3	GEB2/IO142RSB2
T4	IO134RSB2
T5	IO125RSB2
T6	IO123RSB2
T7	IO118RSB2
T8	IO115RSB2
T9	IO111RSB2
T10	IO106RSB2
T11	IO102RSB2
T12	GDC2/IO91RSB2

FG256	
Pin Number	**A3P600 Function**
T13	IO93RSB2
T14	GDA2/IO89RSB2
T15	TMS
T16	GND

© 2023 Microchip Technology Inc. and its subsidiaries

FG256	
Pin Number	A3P1000 Function
A1	GND
A2	GAA0/IO00RSB0
A3	GAA1/IO01RSB0
A4	GAB0/IO02RSB0
A5	IO16RSB0
A6	IO22RSB0
A7	IO28RSB0
A8	IO35RSB0
A9	IO45RSB0
A10	IO50RSB0
A11	IO55RSB0
A12	IO61RSB0
A13	GBB1/IO75RSB0
A14	GBA0/IO76RSB0
A15	GBA1/IO77RSB0
A16	GND
B1	GAB2/IO224PDB3
B2	GAA2/IO225PDB3
B3	GNDQ
B4	GAB1/IO03RSB0
B5	IO17RSB0
B6	IO21RSB0
B7	IO27RSB0
B8	IO34RSB0
B9	IO44RSB0
B10	IO51RSB0
B11	IO57RSB0
B12	GBC1/IO73RSB0
B13	GBB0/IO74RSB0
B14	IO71RSB0
B15	GBA2/IO78PDB1
B16	IO81PDB1
C1	IO224NDB3
C2	IO225NDB3
C3	VMV3
C4	IO11RSB0
C5	GAC0/IO04RSB0
C6	GAC1/IO05RSB0

FG256	
Pin Number	A3P1000 Function
C7	IO25RSB0
C8	IO36RSB0
C9	IO42RSB0
C10	IO49RSB0
C11	IO56RSB0
C12	GBC0/IO72RSB0
C13	IO62RSB0
C14	VMV0
C15	IO78NDB1
C16	IO81NDB1
D1	IO222NDB3
D2	IO222PDB3
D3	GAC2/IO223PDB3
D4	IO223NDB3
D5	GNDQ
D6	IO23RSB0
D7	IO29RSB0
D8	IO33RSB0
D9	IO46RSB0
D10	IO52RSB0
D11	IO60RSB0
D12	GNDQ
D13	IO80NDB1
D14	GBB2/IO79PDB1
D15	IO79NDB1
D16	IO82NSB1
E1	IO217PDB3
E2	IO218PDB3
E3	IO221NDB3
E4	IO221PDB3
E5	VMV0
E6	VCCIB0
E7	VCCIB0
E8	IO38RSB0
E9	IO47RSB0
E10	VCCIB0
E11	VCCIB0
E12	VMV1

FG256	
Pin Number	A3P1000 Function
E13	GBC2/IO80PDB1
E14	IO83PPB1
E15	IO86PPB1
E16	IO87PDB1
F1	IO217NDB3
F2	IO218NDB3
F3	IO216PDB3
F4	IO216NDB3
F5	VCCIB3
F6	GND
F7	VCC
F8	VCC
F9	VCC
F10	VCC
F11	GND
F12	VCCIB1
F13	IO83NPB1
F14	IO86NPB1
F15	IO90PPB1
F16	IO87NDB1
G1	IO210PSB3
G2	IO213NDB3
G3	IO213PDB3
G4	GFC1/IO209PPB3
G5	VCCIB3
G6	VCC
G7	GND
G8	GND
G9	GND
G10	GND
G11	VCC
G12	VCCIB1
G13	GCC1/IO91PPB1
G14	IO90NPB1
G15	IO88PDB1
G16	IO88NDB1
H1	GFB0/IO208NPB3
H2	GFA0/IO207NDB3

© 2023 Microchip Technology Inc. and its subsidiaries

FG256	
Pin Number	A3P1000 Function
H3	GFB1/IO208PPB3
H4	VCOMPLF
H5	GFC0/IO209NPB3
H6	VCC
H7	GND
H8	GND
H9	GND
H10	GND
H11	VCC
H12	GCC0/IO91NPB1
H13	GCB1/IO92PPB1
H14	GCA0/IO93NPB1
H15	IO96NPB1
H16	GCB0/IO92NPB1
J1	GFA2/IO206PSB3
J2	GFA1/IO207PDB3
J3	VCCPLF
J4	IO205NDB3
J5	GFB2/IO205PDB3
J6	VCC
J7	GND
J8	GND
J9	GND
J10	GND
J11	VCC
J12	GCB2/IO95PPB1
J13	GCA1/IO93PPB1
J14	GCC2/IO96PPB1
J15	IO100PPB1
J16	GCA2/IO94PSB1
K1	GFC2/IO204PDB3
K2	IO204NDB3
K3	IO203NDB3
K4	IO203PDB3
K5	VCCIB3
K6	VCC
K7	GND
K8	GND

FG256	
Pin Number	A3P1000 Function
K9	GND
K10	GND
K11	VCC
K12	VCCIB1
K13	IO95NPB1
K14	IO100NPB1
K15	IO102NDB1
K16	IO102PDB1
L1	IO202NDB3
L2	IO202PDB3
L3	IO196PPB3
L4	IO193PPB3
L5	VCCIB3
L6	GND
L7	VCC
L8	VCC
L9	VCC
L10	VCC
L11	GND
L12	VCCIB1
L13	GDB0/IO112NPB1
L14	IO106NDB1
L15	IO106PDB1
L16	IO107PDB1
M1	IO197NSB3
M2	IO196NPB3
M3	IO193NPB3
M4	GEC0/IO190NPB3
M5	VMV3
M6	VCCIB2
M7	VCCIB2
M8	IO147RSB2
M9	IO136RSB2
M10	VCCIB2
M11	VCCIB2
M12	VMV2
M13	IO110NDB1
M14	GDB1/IO112PPB1

FG256	
Pin Number	A3P1000 Function
M15	GDC1/IO111PDB1
M16	IO107NDB1
N1	IO194PSB3
N2	IO192PPB3
N3	GEC1/IO190PPB3
N4	IO192NPB3
N5	GNDQ
N6	GEA2/IO187RSB2
N7	IO161RSB2
N8	IO155RSB2
N9	IO141RSB2
N10	IO129RSB2
N11	IO124RSB2
N12	GNDQ
N13	IO110PDB1
N14	VJTAG
N15	GDC0/IO111NDB1
N16	GDA1/IO113PDB1
P1	GEB1/IO189PDB3
P2	GEB0/IO189NDB3
P3	VMV2
P4	IO179RSB2
P5	IO171RSB2
P6	IO165RSB2
P7	IO159RSB2
P8	IO151RSB2
P9	IO137RSB2
P10	IO134RSB2
P11	IO128RSB2
P12	VMV1
P13	TCK
P14	VPUMP
P15	TRST
P16	GDA0/IO113NDB1
R1	GEA1/IO188PDB3
R2	GEA0/IO188NDB3
R3	IO184RSB2
R4	GEC2/IO185RSB2

© 2023 Microchip Technology Inc. and its subsidiaries

FG256	
Pin Number	**A3P1000 Function**
R5	IO168RSB2
R6	IO163RSB2
R7	IO157RSB2
R8	IO149RSB2
R9	IO143RSB2
R10	IO138RSB2
R11	IO131RSB2
R12	IO125RSB2
R13	GDB2/IO115RSB2
R14	TDI
R15	GNDQ
R16	TDO
T1	GND
T2	IO183RSB2
T3	GEB2/IO186RSB2
T4	IO172RSB2
T5	IO170RSB2
T6	IO164RSB2
T7	IO158RSB2
T8	IO153RSB2
T9	IO142RSB2
T10	IO135RSB2
T11	IO130RSB2
T12	GDC2/IO116RSB2
T13	IO120RSB2
T14	GDA2/IO114RSB2
T15	TMS
T16	GND

© 2023 Microchip Technology Inc. and its subsidiaries Microchip Technology Inc.

4.9 FG484

FIGURE 4-9 **• FG484—BOTTOM VIEW**

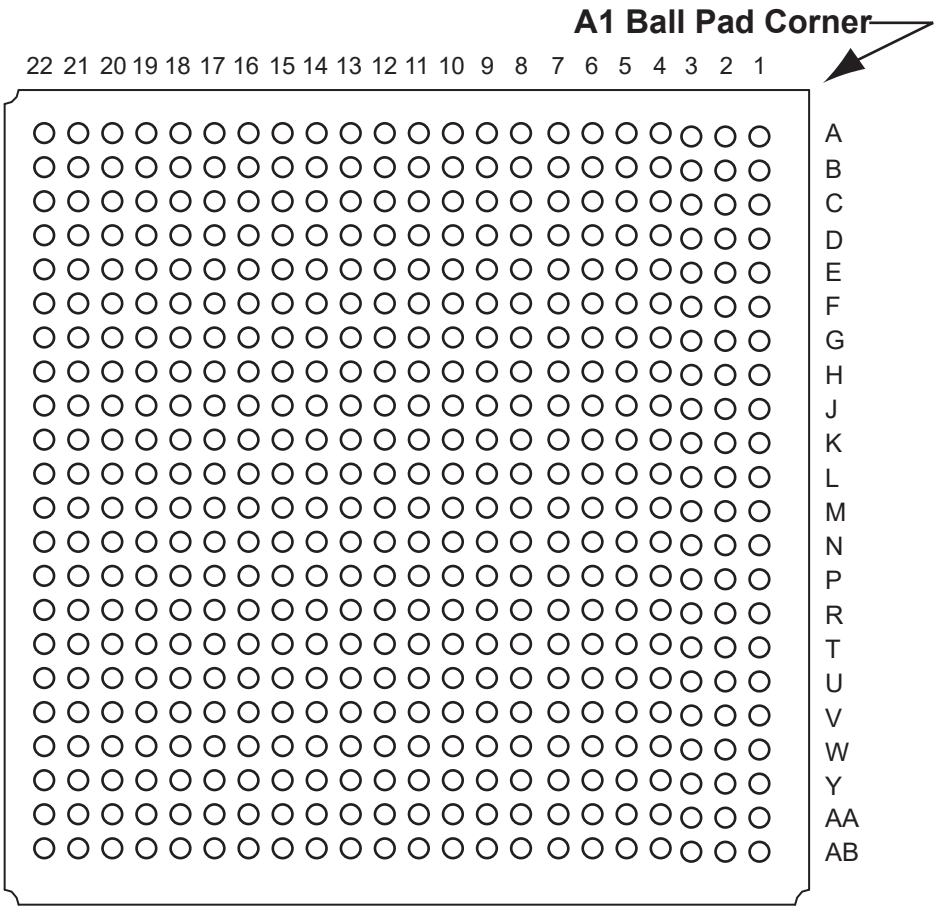

Note: For more information on package drawings, see PD3068: Package Mechanical Drawings.

© 2023 Microchip Technology Inc. and its subsidiaries

FG484	
Pin Number	A3P600 Function
A1	GND
A2	GND
A3	VCCIB0
A4	NC
A5	NC
A6	IO09RSB0
A7	IO15RSB0
A8	NC
A9	NC
A10	IO22RSB0
A11	IO23RSB0
A12	IO29RSB0
A13	IO35RSB0
A14	NC
A15	NC
A16	IO46RSB0
A17	IO48RSB0
A18	NC
A19	NC
A20	VCCIB0
A21	GND
A22	GND
B1	GND
B2	VCCIB3
B3	NC
B4	NC
B5	NC
B6	IO08RSB0
B7	IO12RSB0
B8	NC
B9	NC
B10	IO17RSB0
B11	NC
B12	NC
B13	IO36RSB0
B14	NC

FG484	
Pin Number	A3P600 Function
B15	NC
B16	IO47RSB0
B17	IO49RSB0
B18	NC
B19	NC
B20	NC
B21	VCCIB1
B22	GND
C1	VCCIB3
C2	NC
C3	NC
C4	NC
C5	GND
C6	NC
C7	NC
C8	VCC
C9	VCC
C10	NC
C11	NC
C12	NC
C13	NC
C14	VCC
C15	VCC
C16	NC
C17	NC
C18	GND
C19	NC
C20	NC
C21	NC
C22	VCCIB1
D1	NC
D2	NC
D3	NC
D4	GND
D5	GAA0/IO00RSB0
D6	GAA1/IO01RSB0

FG484	
Pin Number	A3P600 Function
D7	GAB0/IO02RSB0
D8	IO11RSB0
D9	IO16RSB0
D10	IO18RSB0
D11	IO28RSB0
D12	IO34RSB0
D13	IO37RSB0
D14	IO41RSB0
D15	IO43RSB0
D16	GBB1/IO57RSB0
D17	GBA0/IO58RSB0
D18	GBA1/IO59RSB0
D19	GND
D20	NC
D21	NC
D22	NC
E1	NC
E2	NC
E3	GND
E4	GAB2/IO173PDB3
E5	GAA2/IO174PDB3
E6	GNDQ
E7	GAB1/IO03RSB0
E8	IO13RSB0
E9	IO14RSB0
E10	IO21RSB0
E11	IO27RSB0
E12	IO32RSB0
E13	IO38RSB0
E14	IO42RSB0
E15	GBC1/IO55RSB0
E16	GBB0/IO56RSB0
E17	IO52RSB0
E18	GBA2/IO60PDB1
E19	IO60NDB1
E20	GND

© 2023 Microchip Technology Inc. and its subsidiaries

FG484	
Pin Number	A3P600 Function
E21	NC
E22	NC
F1	NC
F2	NC
F3	NC
F4	IO173NDB3
F5	IO174NDB3
F6	VMV3
F7	IO07RSB0
F8	GAC0/IO04RSB0
F9	GAC1/IO05RSB0
F10	IO20RSB0
F11	IO24RSB0
F12	IO33RSB0
F13	IO39RSB0
F14	IO44RSB0
F15	GBC0/IO54RSB0
F16	IO51RSB0
F17	VMV0
F18	IO61NPB1
F19	IO63PDB1
F20	NC
F21	NC
F22	NC
G1	IO170NDB3
G2	IO170PDB3
G3	NC
G4	IO171NDB3
G5	IO171PDB3
G6	GAC2/IO172PDB3
G7	IO06RSB0
G8	GNDQ
G9	IO10RSB0
G10	IO19RSB0
G11	IO26RSB0
G12	IO30RSB0

FG484	
Pin Number	A3P600 Function
G13	IO40RSB0
G14	IO45RSB0
G15	GNDQ
G16	IO50RSB0
G17	GBB2/IO61PPB1
G18	IO53RSB0
G19	IO63NDB1
G20	NC
G21	NC
G22	NC
H1	NC
H2	NC
H3	VCC
H4	IO166PDB3
H5	IO167NPB3
H6	IO172NDB3
H7	IO169NDB3
H8	VMV0
H9	VCCIB0
H10	VCCIB0
H11	IO25RSB0
H12	IO31RSB0
H13	VCCIB0
H14	VCCIB0
H15	VMV1
H16	GBC2/IO62PDB1
H17	IO67PPB1
H18	IO64PPB1
H19	IO66PDB1
H20	VCC
H21	NC
H22	NC
J1	NC
J2	NC
J3	NC
J4	IO166NDB3

FG484	
Pin Number	A3P600 Function
J5	IO168NPB3
J6	IO167PPB3
J7	IO169PDB3
J8	VCCIB3
J9	GND
J10	VCC
J11	VCC
J12	VCC
J13	VCC
J14	GND
J15	VCCIB1
J16	IO62NDB1
J17	IO64NPB1
J18	IO65PPB1
J19	IO66NDB1
J20	NC
J21	IO68PDB1
J22	IO68NDB1
K1	IO157PDB3
K2	IO157NDB3
K3	NC
K4	IO165NDB3
K5	IO165PDB3
K6	IO168PPB3
K7	GFC1/IO164PPB3
K8	VCCIB3
K9	VCC
K10	GND
K11	GND
K12	GND
K13	GND
K14	VCC
K15	VCCIB1
K16	GCC1/IO69PPB1
K17	IO65NPB1
K18	IO75PDB1

© 2023 Microchip Technology Inc. and its subsidiaries

FG484	
Pin Number	A3P600 Function
K19	IO75NDB1
K20	NC
K21	IO76NDB1
K22	IO76PDB1
L1	NC
L2	IO155PDB3
L3	NC
L4	GFB0/IO163NPB3
L5	GFA0/IO162NDB3
L6	GFB1/IO163PPB3
L7	VCOMPLF
L8	GFC0/IO164NPB3
L9	VCC
L10	GND
L11	GND
L12	GND
L13	GND
L14	VCC
L15	GCC0/IO69NPB1
L16	GCB1/IO70PPB1
L17	GCA0/IO71NPB1
L18	IO67NPB1
L19	GCB0/IO70NPB1
L20	IO77PDB1
L21	IO77NDB1
L22	IO78NPB1
M1	NC
M2	IO155NDB3
M3	IO158NPB3
M4	GFA2/IO161PPB3
M5	GFA1/IO162PDB3
M6	VCCPLF
M7	IO160NDB3
M8	GFB2/IO160PDB3
M9	VCC
M10	GND

FG484	
Pin Number	A3P600 Function
M11	GND
M12	GND
M13	GND
M14	VCC
M15	GCB2/IO73PPB1
M16	GCA1/IO71PPB1
M17	GCC2/IO74PPB1
M18	IO80PPB1
M19	GCA2/IO72PDB1
M20	IO79PPB1
M21	IO78PPB1
M22	NC
N1	IO154NDB3
N2	IO154PDB3
N3	NC
N4	GFC2/IO159PDB3
N5	IO161NPB3
N6	IO156PPB3
N7	IO129RSB2
N8	VCCIB3
N9	VCC
N10	GND
N11	GND
N12	GND
N13	GND
N14	VCC
N15	VCCIB1
N16	IO73NPB1
N17	IO80NPB1
N18	IO74NPB1
N19	IO72NDB1
N20	NC
N21	IO79NPB1
N22	NC
P1	NC
P2	IO153PDB3

FG484	
Pin Number	A3P600 Function
P3	IO153NDB3
P4	IO159NDB3
P5	IO156NPB3
P6	IO151PPB3
P7	IO158PPB3
P8	VCCIB3
P9	GND
P10	VCC
P11	VCC
P12	VCC
P13	VCC
P14	GND
P15	VCCIB1
P16	GDB0/IO87NPB1
P17	IO85NDB1
P18	IO85PDB1
P19	IO84PDB1
P20	NC
P21	IO81PDB1
P22	NC
R1	NC
R2	NC
R3	VCC
R4	IO150PDB3
R5	IO151NPB3
R6	IO147NPB3
R7	GEC0/IO146NPB3
R8	VMV3
R9	VCCIB2
R10	VCCIB2
R11	IO117RSB2
R12	IO110RSB2
R13	VCCIB2
R14	VCCIB2
R15	VMV2
R16	IO94RSB2

© 2023 Microchip Technology Inc. and its subsidiaries

FG484	
Pin Number	A3P600 Function
R17	GDB1/IO87PPB1
R18	GDC1/IO86PDB1
R19	IO84NDB1
R20	VCC
R21	IO81NDB1
R22	IO82PDB1
T1	IO152PDB3
T2	IO152NDB3
T3	NC
T4	IO150NDB3
T5	IO147PPB3
T6	GEC1/IO146PPB3
T7	IO140RSB2
T8	GNDQ
T9	GEA2/IO143RSB2
T10	IO126RSB2
T11	IO120RSB2
T12	IO108RSB2
T13	IO103RSB2
T14	IO99RSB2
T15	GNDQ
T16	IO92RSB2
T17	VJTAG
T18	GDC0/IO86NDB1
T19	GDA1/IO88PDB1
T20	NC
T21	IO83PDB1
T22	IO82NDB1
U1	IO149PDB3
U2	IO149NDB3
U3	NC
U4	GEB1/IO145PDB3
U5	GEB0/IO145NDB3
U6	VMV2
U7	IO138RSB2
U8	IO136RSB2

FG484	
Pin Number	A3P600 Function
U9	IO131RSB2
U10	IO124RSB2
U11	IO119RSB2
U12	IO107RSB2
U13	IO104RSB2
U14	IO97RSB2
U15	VMV1
U16	TCK
U17	VPUMP
U18	TRST
U19	GDA0/IO88NDB1
U20	NC
U21	IO83NDB1
U22	NC
V1	NC
V2	NC
V3	GND
V4	GEA1/IO144PDB3
V5	GEA0/IO144NDB3
V6	IO139RSB2
V7	GEC2/IO141RSB2
V8	IO132RSB2
V9	IO127RSB2
V10	IO121RSB2
V11	IO114RSB2
V12	IO109RSB2
V13	IO105RSB2
V14	IO98RSB2
V15	IO96RSB2
V16	GDB2/IO90RSB2
V17	TDI
V18	GNDQ
V19	TDO
V20	GND
V21	NC
V22	NC

FG484	
Pin Number	A3P600 Function
W1	NC
W2	IO148PDB3
W3	NC
W4	GND
W5	IO137RSB2
W6	GEB2/IO142RSB2
W7	IO134RSB2
W8	IO125RSB2
W9	IO123RSB2
W10	IO118RSB2
W11	IO115RSB2
W12	IO111RSB2
W13	IO106RSB2
W14	IO102RSB2
W15	GDC2/IO91RSB2
W16	IO93RSB2
W17	GDA2/IO89RSB2
W18	TMS
W19	GND
W20	NC
W21	NC
W22	NC
Y1	VCCIB3
Y2	IO148NDB3
Y3	NC
Y4	NC
Y5	GND
Y6	NC
Y7	NC
Y8	VCC
Y9	VCC
Y10	NC
Y11	NC
Y12	NC
Y13	NC
Y14	VCC

© 2023 Microchip Technology Inc. and its subsidiaries

FG484	
Pin Number	**A3P600 Function**
Y15	VCC
Y16	NC
Y17	NC
Y18	GND
Y19	NC
Y20	NC
Y21	NC
Y22	VCCIB1
AA1	GND
AA2	VCCIB3
AA3	NC
AA4	NC
AA5	NC
AA6	IO135RSB2
AA7	IO133RSB2
AA8	NC
AA9	NC
AA10	NC
AA11	NC
AA12	NC
AA13	NC
AA14	NC
AA15	NC
AA16	IO101RSB2
AA17	NC
AA18	NC
AA19	NC
AA20	NC
AA21	VCCIB1
AA22	GND
AB1	GND
AB2	GND
AB3	VCCIB2
AB4	NC
AB5	NC
AB6	IO130RSB2

FG484	
Pin Number	**A3P600 Function**
AB7	IO128RSB2
AB8	IO122RSB2
AB9	IO116RSB2
AB10	NC
AB11	NC
AB12	IO113RSB2
AB13	IO112RSB2
AB14	NC
AB15	NC
AB16	IO100RSB2
AB17	IO95RSB2
AB18	NC
AB19	NC
AB20	VCCIB2
AB21	GND
AB22	GND

© 2023 Microchip Technology Inc. and its subsidiaries

FG484	
Pin Number	A3P1000 Function
A1	GND
A2	GND
A3	VCCIB0
A4	IO07RSB0
A5	IO09RSB0
A6	IO13RSB0
A7	IO18RSB0
A8	IO20RSB0
A9	IO26RSB0
A10	IO32RSB0
A11	IO40RSB0
A12	IO41RSB0
A13	IO53RSB0
A14	IO59RSB0
A15	IO64RSB0
A16	IO65RSB0
A17	IO67RSB0
A18	IO69RSB0
A19	NC
A20	VCCIB0
A21	GND
A22	GND
B1	GND
B2	VCCIB3
B3	NC
B4	IO06RSB0
B5	IO08RSB0
B6	IO12RSB0
B7	IO15RSB0
B8	IO19RSB0
B9	IO24RSB0
B10	IO31RSB0
B11	IO39RSB0
B12	IO48RSB0
B13	IO54RSB0
B14	IO58RSB0

FG484	
Pin Number	A3P1000 Function
B15	IO63RSB0
B16	IO66RSB0
B17	IO68RSB0
B18	IO70RSB0
B19	NC
B20	NC
B21	VCCIB1
B22	GND
C1	VCCIB3
C2	IO220PDB3
C3	NC
C4	NC
C5	GND
C6	IO10RSB0
C7	IO14RSB0
C8	VCC
C9	VCC
C10	IO30RSB0
C11	IO37RSB0
C12	IO43RSB0
C13	NC
C14	VCC
C15	VCC
C16	NC
C17	NC
C18	GND
C19	NC
C20	NC
C21	NC
C22	VCCIB1
D1	IO219PDB3
D2	IO220NDB3
D3	NC
D4	GND
D5	GAA0/IO00RSB0
D6	GAA1/IO01RSB0

FG484	
Pin Number	A3P1000 Function
D7	GAB0/IO02RSB0
D8	IO16RSB0
D9	IO22RSB0
D10	IO28RSB0
D11	IO35RSB0
D12	IO45RSB0
D13	IO50RSB0
D14	IO55RSB0
D15	IO61RSB0
D16	GBB1/IO75RSB0
D17	GBA0/IO76RSB0
D18	GBA1/IO77RSB0
D19	GND
D20	NC
D21	NC
D22	NC
E1	IO219NDB3
E2	NC
E3	GND
E4	GAB2/IO224PDB3
E5	GAA2/IO225PDB3
E6	GNDQ
E7	GAB1/IO03RSB0
E8	IO17RSB0
E9	IO21RSB0
E10	IO27RSB0
E11	IO34RSB0
E12	IO44RSB0
E13	IO51RSB0
E14	IO57RSB0
E15	GBC1/IO73RSB0
E16	GBB0/IO74RSB0
E17	IO71RSB0
E18	GBA2/IO78PDB1
E19	IO81PDB1
E20	GND

© 2023 Microchip Technology Inc. and its subsidiaries

FG484	
Pin Number	A3P1000 Function
E21	NC
E22	IO84PDB1
F1	NC
F2	IO215PDB3
F3	IO215NDB3
F4	IO224NDB3
F5	IO225NDB3
F6	VMV3
F7	IO11RSB0
F8	GAC0/IO04RSB0
F9	GAC1/IO05RSB0
F10	IO25RSB0
F11	IO36RSB0
F12	IO42RSB0
F13	IO49RSB0
F14	IO56RSB0
F15	GBC0/IO72RSB0
F16	IO62RSB0
F17	VMV0
F18	IO78NDB1
F19	IO81NDB1
F20	IO82PPB1
F21	NC
F22	IO84NDB1
G1	IO214NDB3
G2	IO214PDB3
G3	NC
G4	IO222NDB3
G5	IO222PDB3
G6	GAC2/IO223PDB3
G7	IO223NDB3
G8	GNDQ
G9	IO23RSB0
G10	IO29RSB0
G11	IO33RSB0
G12	IO46RSB0

FG484	
Pin Number	A3P1000 Function
G13	IO52RSB0
G14	IO60RSB0
G15	GNDQ
G16	IO80NDB1
G17	GBB2/IO79PDB1
G18	IO79NDB1
G19	IO82NPB1
G20	IO85PDB1
G21	IO85NDB1
G22	NC
H1	NC
H2	NC
H3	VCC
H4	IO217PDB3
H5	IO218PDB3
H6	IO221NDB3
H7	IO221PDB3
H8	VMV0
H9	VCCIB0
H10	VCCIB0
H11	IO38RSB0
H12	IO47RSB0
H13	VCCIB0
H14	VCCIB0
H15	VMV1
H16	GBC2/IO80PDB1
H17	IO83PPB1
H18	IO86PPB1
H19	IO87PDB1
H20	VCC
H21	NC
H22	NC
J1	IO212NDB3
J2	IO212PDB3
J3	NC
J4	IO217NDB3

FG484	
Pin Number	A3P1000 Function
J5	IO218NDB3
J6	IO216PDB3
J7	IO216NDB3
J8	VCCIB3
J9	GND
J10	VCC
J11	VCC
J12	VCC
J13	VCC
J14	GND
J15	VCCIB1
J16	IO83NPB1
J17	IO86NPB1
J18	IO90PPB1
J19	IO87NDB1
J20	NC
J21	IO89PDB1
J22	IO89NDB1
K1	IO211PDB3
K2	IO211NDB3
K3	NC
K4	IO210PPB3
K5	IO213NDB3
K6	IO213PDB3
K7	GFC1/IO209PPB3
K8	VCCIB3
K9	VCC
K10	GND
K11	GND
K12	GND
K13	GND
K14	VCC
K15	VCCIB1
K16	GCC1/IO91PPB1
K17	IO90NPB1
K18	IO88PDB1

© 2023 Microchip Technology Inc. and its subsidiaries

FG484	
Pin Number	A3P1000 Function
K19	IO88NDB1
K20	IO94NPB1
K21	IO98NDB1
K22	IO98PDB1
L1	NC
L2	IO200PDB3
L3	IO210NPB3
L4	GFB0/IO208NPB3
L5	GFA0/IO207NDB3
L6	GFB1/IO208PPB3
L7	VCOMPLF
L8	GFC0/IO209NPB3
L9	VCC
L10	GND
L11	GND
L12	GND
L13	GND
L14	VCC
L15	GCC0/IO91NPB1
L16	GCB1/IO92PPB1
L17	GCA0/IO93NPB1
L18	IO96NPB1
L19	GCB0/IO92NPB1
L20	IO97PDB1
L21	IO97NDB1
L22	IO99NPB1
M1	NC
M2	IO200NDB3
M3	IO206NDB3
M4	GFA2/IO206PDB3
M5	GFA1/IO207PDB3
M6	VCCPLF
M7	IO205NDB3
M8	GFB2/IO205PDB3
M9	VCC
M10	GND

FG484	
Pin Number	A3P1000 Function
M11	GND
M12	GND
M13	GND
M14	VCC
M15	GCB2/IO95PPB1
M16	GCA1/IO93PPB1
M17	GCC2/IO96PPB1
M18	IO100PPB1
M19	GCA2/IO94PPB1
M20	IO101PPB1
M21	IO99PPB1
M22	NC
N1	IO201NDB3
N2	IO201PDB3
N3	NC
N4	GFC2/IO204PDB3
N5	IO204NDB3
N6	IO203NDB3
N7	IO203PDB3
N8	VCCIB3
N9	VCC
N10	GND
N11	GND
N12	GND
N13	GND
N14	VCC
N15	VCCIB1
N16	IO95NPB1
N17	IO100NPB1
N18	IO102NDB1
N19	IO102PDB1
N20	NC
N21	IO101NPB1
N22	IO103PDB1
P1	NC
P2	IO199PDB3

FG484	
Pin Number	A3P1000 Function
P3	IO199NDB3
P4	IO202NDB3
P5	IO202PDB3
P6	IO196PPB3
P7	IO193PPB3
P8	VCCIB3
P9	GND
P10	VCC
P11	VCC
P12	VCC
P13	VCC
P14	GND
P15	VCCIB1
P16	GDB0/IO112NPB1
P17	IO106NDB1
P18	IO106PDB1
P19	IO107PDB1
P20	NC
P21	IO104PDB1
P22	IO103NDB1
R1	NC
R2	IO197PPB3
R3	VCC
R4	IO197NPB3
R5	IO196NPB3
R6	IO193NPB3
R7	GEC0/IO190NPB3
R8	VMV3
R9	VCCIB2
R10	VCCIB2
R11	IO147RSB2
R12	IO136RSB2
R13	VCCIB2
R14	VCCIB2
R15	VMV2
R16	IO110NDB1

© 2023 Microchip Technology Inc. and its subsidiaries

FG484	
Pin Number	A3P1000 Function
R17	GDB1/IO112PPB1
R18	GDC1/IO111PDB1
R19	IO107NDB1
R20	VCC
R21	IO104NDB1
R22	IO105PDB1
T1	IO198PDB3
T2	IO198NDB3
T3	NC
T4	IO194PPB3
T5	IO192PPB3
T6	GEC1/IO190PPB3
T7	IO192NPB3
T8	GNDQ
T9	GEA2/IO187RSB2
T10	IO161RSB2
T11	IO155RSB2
T12	IO141RSB2
T13	IO129RSB2
T14	IO124RSB2
T15	GNDQ
T16	IO110PDB1
T17	VJTAG
T18	GDC0/IO111NDB1
T19	GDA1/IO113PDB1
T20	NC
T21	IO108PDB1
T22	IO105NDB1
U1	IO195PDB3
U2	IO195NDB3
U3	IO194NPB3
U4	GEB1/IO189PDB3
U5	GEB0/IO189NDB3
U6	VMV2
U7	IO179RSB2
U8	IO171RSB2

FG484	
Pin Number	A3P1000 Function
U9	IO165RSB2
U10	IO159RSB2
U11	IO151RSB2
U12	IO137RSB2
U13	IO134RSB2
U14	IO128RSB2
U15	VMV1
U16	TCK
U17	VPUMP
U18	TRST
U19	GDA0/IO113NDB1
U20	NC
U21	IO108NDB1
U22	IO109PDB1
V1	NC
V2	NC
V3	GND
V4	GEA1/IO188PDB3
V5	GEA0/IO188NDB3
V6	IO184RSB2
V7	GEC2/IO185RSB2
V8	IO168RSB2
V9	IO163RSB2
V10	IO157RSB2
V11	IO149RSB2
V12	IO143RSB2
V13	IO138RSB2
V14	IO131RSB2
V15	IO125RSB2
V16	GDB2/IO115RSB2
V17	TDI
V18	GNDQ
V19	TDO
V20	GND
V21	NC
V22	IO109NDB1

FG484	
Pin Number	A3P1000 Function
W1	NC
W2	IO191PDB3
W3	NC
W4	GND
W5	IO183RSB2
W6	GEB2/IO186RSB2
W7	IO172RSB2
W8	IO170RSB2
W9	IO164RSB2
W10	IO158RSB2
W11	IO153RSB2
W12	IO142RSB2
W13	IO135RSB2
W14	IO130RSB2
W15	GDC2/IO116RSB2
W16	IO120RSB2
W17	GDA2/IO114RSB2
W18	TMS
W19	GND
W20	NC
W21	NC
W22	NC
Y1	VCCIB3
Y2	IO191NDB3
Y3	NC
Y4	IO182RSB2
Y5	GND
Y6	IO177RSB2
Y7	IO174RSB2
Y8	VCC
Y9	VCC
Y10	IO154RSB2
Y11	IO148RSB2
Y12	IO140RSB2
Y13	NC
Y14	VCC

© 2023 Microchip Technology Inc. and its subsidiaries

FG484	
Pin Number	**A3P1000 Function**
Y15	VCC
Y16	NC
Y17	NC
Y18	GND
Y19	NC
Y20	NC
Y21	NC
Y22	VCCIB1
AA1	GND
AA2	VCCIB3
AA3	NC
AA4	IO181RSB2
AA5	IO178RSB2
AA6	IO175RSB2
AA7	IO169RSB2
AA8	IO166RSB2
AA9	IO160RSB2
AA10	IO152RSB2
AA11	IO146RSB2
AA12	IO139RSB2
AA13	IO133RSB2
AA14	NC
AA15	NC
AA16	IO122RSB2
AA17	IO119RSB2
AA18	IO117RSB2
AA19	NC
AA20	NC
AA21	VCCIB1
AA22	GND
AB1	GND
AB2	GND
AB3	VCCIB2
AB4	IO180RSB2
AB5	IO176RSB2
AB6	IO173RSB2

FG484	
Pin Number	**A3P1000 Function**
AB7	IO167RSB2
AB8	IO162RSB2
AB9	IO156RSB2
AB10	IO150RSB2
AB11	IO145RSB2
AB12	IO144RSB2
AB13	IO132RSB2
AB14	IO127RSB2
AB15	IO126RSB2
AB16	IO123RSB2
AB17	IO121RSB2
AB18	IO118RSB2
AB19	NC
AB20	VCCIB2
AB21	GND
AB22	GND

© 2023 Microchip Technology Inc. and its subsidiaries

APPENDIX A: REVISION HISTORY

The following table lists critical changes that were made in each version of the ProASIC 3 datasheet

A.1 Revision C - 01/2023

.The following is the summary of changes in revision C of this document:
- Updated Table 1 in ARM Processor Support in ProASIC 3 FPGAs section

A.2 Revision B - 03/2022

The following is the summary of changes in revision B of the document:
- Updated ProASIC 3 Ordering Information: Interchanged the position of I and Y values.

A.3 Revision A - 02/2022

The following is the summary of changes in revision A of the document:
- The document number was changed from 51700097 to DS50003269.
- The document was migrated to the Microchip template

A.4 Revision 19 - 11/2019

The following is the summary of changes in revision B of the document:
- Removed the A3P015 device and its related details across the document.
- Migrated to Microchip-Microsemi template changes.

A.5 Revision 18 - 03/2016

The following is the summary of changes in revision B of the document:
- Updated 3.3V DC supply voltage's maximum Commercial and Industrial values from 3.3V to 3.6V in Table 2-2 (SAR 72693).
- Added reference of Package Mechanical Drawings document in all package pin assignment notes (76833).

A.6 Revision 17 - 06/2015

The following is the summary of changes in revision B of the document:
- Removed PQFP embedded heat spreader info. from Table 2-5 (SAR 52320).
- Updated Section 3.1.4 VCCIBx I/O Supply Voltage (SAR 43323).

A.7 Revision 16 - 12/2014

The following is the summary of changes in revision B of the document:
- Updated ProASIC 3 Ordering Information. Interchanged the positions of Y- Security Feature and I- Application (Temperature Range) (SAR 61079). Added Note "Only devices with package size greater than or equal to 5x5 are supported".
- Updated Table Note (2) in Table 2-3 so that the Table Note is not applicable for Maximum Storage Temperature T_{STG} (SAR 54297).
- Added values for Drive strength 2 mA in Table 2-41, Table 2-42, Table 2-43, and Table 2-44 (SAR 57184).
- Added Table 2-1 (SAR 45466).
- Updates made to maintain the style and consistency of the document.

A.8 Revision 15 - 07/2014

The following is the summary of changes in revision B of the document:
- Added corner pad table note (3) to Section 4.3 QN132 (SAR 47442).
- Ambient temperature removed in Table 2-2, table notes and ProASIC 3 Ordering Information figure were modified (SAR 48343).

- Other updates were made to maintain the style and consistency of the datasheet.

A.9 Revision 14 - 04/2014

The following is the summary of changes in revision B of the document:

- Note added for the discontinuance of QN132 package to the following tables and section: I/Os PER PACKAGE 1 and Section 4.3 QN132 (SAR 55118).

A.10 Revision 13 - 01/2013

The following is the summary of changes in revision B of the document:

- The ProASIC 3 Ordering Information has been updated to mention "Y" as "Blank" mentioning "Device Does Not Include License to Implement IP Based on the Cryptography Research, Inc. (CRI) Patent Portfolio" (SAR 43104).
- Added a note to Table 2-2 (SAR 43644): The programming temperature range supported is $T_{ambient}$ = 0 °C to 85 °C.
- The note in Table 2-113 referring the reader to SmartGen was revised to refer instead to the online help associated with the core (SAR 42569).
- Libero Integrated Design Environment (IDE) was changed to Libero System-on-Chip (SoC) throughout the document (SAR 40284). Live at Power-Up (LAPU) has been replaced with 'Instant On'.

A.11 Revision 12 - 09/2012

The following is the summary of changes in revision B of the document:

- The Security section was modified to clarify that Microsemi does not support read-back of programmed data.
- Added a Note stating "VMV pins must be connected to the corresponding VCCI pins. See the Section 3.1.5 VMVx I/O Supply Voltage (quiet) for further information" to Table 2-1 and Table 2-2 (SAR 38321)
- Table 2-35 was revised to change the maximum temperature from 110 °C to 100 °C, with an example of six months instead of three months (SAR 37933).
- In Table 2-92, VIL and VIH were revised so that the maximum is 3.6 V for all listed values of VCCI (SAR 28549).
- Figure 2-37 and Figure 2-38 are new (SAR 28371).
- The following sentence was removed from the Section 3.1.5 VMVx I/O Supply Voltage (quiet) in the Section 3.0 Pin Descriptions chapter: "Within the package, the VMV plane is decoupled from the simultaneous switching noise originating from the output buffer VCCI domain" and replaced with "Within the package, the VMV plane biases the input stage of the I/Os in the I/O banks" (SAR 38321). The datasheet mentions that "VMV pins must be connected to the corresponding VCCI pins" for an ESD enhancement.

A.12 Revision 11 - 03/2012

The following is the summary of changes in revision B of the document:

- Note indicating that A3P015 is not recommended for new designs has been added. The Devices Not Recommended For New Designs is new (SAR 36760).
- The following sentence was removed from the Advanced Architecture section: "In addition, extensive on-chip programming circuitry allows for rapid, single-voltage (3.3 V) programming of IGLOO devices via an IEEE 1532 JTAG interface" (SAR 34687).
- The reference to guidelines for global spines and VersaTile rows, given in the Section 2.2.4.1.4 Global Clock Contribution—PCLOCK, was corrected to the "Spine Architecture" section of the Global Resources chapter in the *ProASIC 3 FPGA Fabric User's Guide* (SAR 34734).
- Figure 2-4 has been modified for the DIN waveform; the Rise and Fall time label has been changed to tDIN (35430).
- The AC Loading figures in the Section 2.3.4 Single-Ended I/O Characteristics were updated to match tables in the Section 2.3.2.2 Summary of I/O Timing Characteristics – Default I/O Software Settings (SAR 34883).
- Added values for minimum pulse width and removed the FRMAX row from Table 2-106 through Table 2-112 in the Section 2.5.2 Global Tree Timing Characteristics. Use the software to determine the FRMAX for the device you are using (SARs 37279, 29269).

© 2023 Microchip Technology Inc. and its subsidiaries

A.13 Revision 10 - 09/2011

The following is the summary of changes in revision B of the document:

- Note indicating that A3P015 is not recommended for new designs has been added. The Devices Not Recommended For New Designs is new (SAR 36760).
- The following sentence was removed from the Advanced Architecture section: "In addition, extensive on-chip programming circuitry allows for rapid, single-voltage (3.3 V) programming of IGLOO devices via an IEEE 1532 JTAG interface" (SAR 34687).
- The reference to guidelines for global spines and VersaTile rows, given in the Section 2.2.4.1.4 Global Clock Contribution—PCLOCK, was corrected to the "Spine Architecture" section of the Global Resources chapter in the *ProASIC 3 FPGA Fabric User's Guide* (SAR 34734).
- Figure 2-4 has been modified for the DIN waveform; the Rise and Fall time label has been changed to tDIN (35430).
- The AC Loading figures in the Section 2.3.4 Single-Ended I/O Characteristics were updated to match tables in the Section 2.3.2.2 Summary of I/O Timing Characteristics – Default I/O Software Settings (SAR 34883).
- Added values for minimum pulse width and removed the FRMAX row from Table 2-106 through Table 2-112 in the Section 2.5.2 Global Tree Timing Characteristics. Use the software to determine the FRMAX for the device you are using (SARs 37279, 29269).
- "TBD" for 3.3 V LVCMOS Wide Range in Table 2-28 through Table 2-30 was replaced by "Same as regular 3.3V" (SAR 33852).
- The equations in the notes for Table 2-31 were corrected (SAR 32470).
- "TBD" for 3.3 V LVCMOS Wide Range in Table 2-32 through Table 2-34 was replaced by "Same as regular 3.3 V LVCMOS" (SAR 33852).
- In the Section 2.3.4.2 3.3V LVCMOS Wide Range, values were added to Table 2-47 through Table 2-49 for IOSL and IOSH, replacing "TBD" (SAR 33852).
- The following sentence was deleted from the Section 2.3.4.3 2.5V LVCMOS (SAR 24916): "It uses a 5 V–tolerant input buffer and push-pull output buffer."
- The table notes were revised for Table 2-89 (SAR 33859).
- Values were added for $F_{DDRIMAX}$ and F_{DDOMAX} in Table 2-101 and Table 2-103 (SAR 23919).
- Table 2-113 was updated. A note was added to indicate that when the CCC/PLL core is generated by Microsemi core generator software, not all delay values of the specified delay increments are available (SAR 25705).
- The following figures were deleted (SAR 29991). Reference was made to a new application note, Simultaneous Read-Write Operations in Dual-Port SRAM for Flash-Based cSoCs and FPGAs, which covers these cases in detail (SAR 21770).
- Figure 2-34 • Write Access after Write onto Same Address
  - Figure 2-35 • Read Access after Write onto Same Address
- Figure 2-35 • Read Access after Write onto Same Address
- The port names in the SRAM Section 2.7.1.1 Timing Waveforms, SRAM Section 2.7.1.2 Timing Characteristics tables, Figure 2-39 · FIFO Reset, and the FIFO Section 2.7.2.2 Timing Characteristics tables were revised to ensure consistency with the software names (SARs 29991, 30510).
- The Section 3.0 Pin Descriptions chapter has been added (SAR 21642).
- Package names used in the Section 4.0 Package Pin Assignments were revised to match standards given in Section 3.5.3 Package Mechanical Drawings (SAR 27395).
- The versioning system for datasheets has been changed. Datasheets are assigned a revision number that increments each time the datasheet is revised. The ProASIC 3 Device Status indicates the status for each device in the device family.

A.14 Revision 9 - 10/2009

The following is the summary of changes in revision B of the document:

- The CS121 package was added to table under Features and Benefits, the I/Os PER PACKAGE 1 table, Table 3, ProASIC 3 Ordering Information, and the Temperature Grade Offerings table.
- ProASIC 3 Ordering Information was revised to include the fact that some RoHS compliant packages are halogen-free.
- The figure and pin table for A3P060 are new.

A.15 Revision 8 - 08/2009

The following is the summary of changes in revision B of the document:

- All references to M7 devices (CoreMP7) and speed grade –F were removed from this document.
- Table 1-1 I/O Standards supported is new.
- The I/Os with Advanced I/O Standards section was revised to add definitions of hot-swap and cold-sparing.
- 3.3 V LVCMOS and 1.2 V LVCMOS Wide Range support was added to the datasheet. This affects all tables that contained 3.3 V LVCMOS and 1.2 V LVCMOS data.
- I_{IL} and I_{IH} input leakage current information was added to all "Minimum and Maximum DC Input and Output Levels" tables.
- –F was removed from the datasheet. The speed grade is no longer supported.
- The notes in Table 2-2 were updated.
- Table 2-4 was updated.
- Table 2-6 was updated.
- In Table 2-114, the following specifications were removed:
  - t_{WRO}
  - t_{CCKH}
- In Table 2-115, the following specifications were removed:
  - t_{WRO}
  - t_{CCKH}
- In the title of Table 2-73, VCCI had a typo. It was changed from 3.0V to 1.7V.
-

A.16 Revision 7 - 02/2019

The following is the summary of changes in revision B of the document:

- The Advanced I/O section was revised to add a bullet regarding wide range power supply voltage support.
- The table under Features and Benefits, was updated to include a value for typical equivalent macrocells for A3P250.
- The QN48 package was added to the following tables: the table under Features and Benefits, I/Os PER PACKAGE 1, and Temperature Grade Offerings.
- The number of singled-ended I/Os for QN68 was added to the I/Os PER PACKAGE 1 table.
- The Wide Range I/O Support section is new

A.17 Revision 6 - 12/2008

The following is the summary of changes in revision B of the document:

- The Section 4.1 QN48 section is new.
- The QN68 pin table for A3P030 is new.

A.18 Revision 5 - 08/2008

The following is the summary of changes in revision B of the document:

- TJ, Maximum Junction Temperature, was changed to 100° from 110º in the Section 2.1.3 Thermal Characteristics and EQ 1. The calculated result of Maximum Power Allowed has thus changed to 1.463 W from 1.951 W.
- Values for the A3P015 device were added to Table 2-7.
- Values for the A3P015 device were added to Table 2-14. P_{AC14} was removed. Table 2-15 is new.
- The Section 2.2.4.1.11 PLL Contribution—PPLL was updated to change the P_{PLL} formula from $P_{AC13} + P_{AC14} * F_{CLKOUT}$ to $P_{DC4} + P_{AC13} * F_{CLKOUT}$.
- Both fall and rise values were included for $t_{DDRISUD}$ and t_{DDRIHD} in Table 2-101.
- Table 2-106 is new.
- The typical value for Delay Increments in Programmable Delay Blocks was changed from 160 to 200 in Table 2-113.

© 2023 Microchip Technology Inc. and its subsidiaries

A.19 Revision 4 - 06/2008

The following is the summary of changes in revision B of the document:

- Table note references were added to Table 2-2, and the order of the table notes was changed.
- The title for Table 2-4 was modified to remove "as measured on quiet I/Os." Table note 1 was revised to remove "estimated SSO density over cycles." Table note 2 was revised to remove "refers only to overshoot/undershoot limits for simultaneous switching I/Os."
- The Section 2.2.2 Power per I/O Pin was updated to include 3 additional tables pertaining to input buffer power and output buffer power.
- Table 2-29 was revised to include values for 3.3V PCI/PCI-X.
- Table 2-89 was updated.

A.20 Revision 3 - 06/2008

The following is the summary of changes in revision B of the document:

- Pin numbers were added to the Section 4.2 QN68 package diagram. Note 2 was added below the diagram.
- The Section 4.3 QN132 package diagram was updated to include D1 to D4. In addition, note 1 was changed from top view to bottom view, and note 2 is new.

A.21 Revision 2 - 02/2008

The following is the summary of changes in revision B of the document:

- This document was divided into two sections and given a version number, starting at v1.0. The first section of the document includes features, benefits, ordering information, and temperature and speed grade offerings. The second section is a device family overview.
- This document was updated to include A3P015 device information. QN68 is a new package that was added because it is offered in the A3P015. The following sections were updated:
  - Features and Benefits
  - ProASIC 3 Ordering Information
  - Temperature Grade Offerings
  - with Optional Soft ARM Support
  - A3P015 and A3P030 note
  - Introduction and Overview (NA)
- The ProASIC3 FPGAs Package Sizes Dimensions table is new.
- In the ProASIC 3 Ordering Information, the QN package measurements were updated to include both 0.4 mm and 0.5 mm.
- In the General Description section the number of I/Os was updated from 288 to 300.
- The Section 4.2 QN68 is new.
-

A.22 Revision 1 - 02/2008

The following is the summary of changes in revision 1 of the document:

- In Table 2-2, T_J was listed in the symbol column and was incorrect. It was corrected and changed to T_A.
- In Table 2-3, Maximum Operating Junction Temperature was changed from 110 °C to 100 °C for both commercial and industrial grades.
- The Section 2.1.2.1 PLL Behavior at Brownout Condition is new.
- In the Section 2.2.4.1.11 PLL Contribution—PPLL, the following was deleted:
- FCLKIN is the input clock frequency.
- In Table 2-21, the note was incorrect. It previously said T_J and it was corrected and changed to T_A.
- In Table 2-113, the SCLK parameter and note 1 are new.
- Table 2-123 was populated with the parameter data, which was not in the previous version of the document.
- In the VQ100 A3P030 pin table, the function of pin 63 was incorrect and changed from IO39RSB0 to GDB0/IO38RSB0.

A.23 Revision 0 - 01/2008

The following is the summary of changes in revision 0 of the document:

- This document was previously in datasheet v2.2. As a result of moving to the handbook format, Actel has restarted the version numbers.

A.24 Revision 2.2 - 07/2007

The following is the summary of changes in revision 2.2 of the document:

- The M7 and M1 device part numbers have been updated in Table 1 • ProASIC 3 Product Family, "I/Os Per Package", "Automotive ProASIC 3 Ordering Information", "Temperature Grade Offerings", and "Speed Grade and Temperature Grade Matrix".
- The words "ambient temperature" were added to the temperature range in the "Automotive ProASIC 3 Ordering Information", "Temperature Grade Offerings", and "Speed Grade and Temperature Grade Matrix" sections.
- The T_J parameter in Table 3-2 • Recommended Operating Conditions was changed to T_A, ambient temperature, and table notes 4–6 were added.

A.25 Revision 2.1 - 05/2007

The following is the summary of changes in revision 2.1 of the document:

- In the "Clock Conditioning Circuit (CCC) and PLL" section, the Wide Input Frequency Range (1.5 MHz to 200 MHz) was changed to (1.5 MHz to 350 MHz).
- The "Clock Conditioning Circuit (CCC) and PLL" section was updated.
- In the "I/Os Per Package" section, the A3P030, A3P060, A3P125, ACP250, and A3P600 device I/Os were updated.
- Table 3-5 • Package Thermal Resistivities was updated with A3P1000 information. The note below the table is also new.
-

A.26 Revision 2.0 - 04/2007

The following is the summary of changes in revision 2.0 of the document:

- In the "Packaging Tables", Ambient was deleted.
- The timing characteristics tables were updated.
- The "PLL Macro" section was updated to add information on the VCO and PLL outputs during power-up.
- The "PLL Macro" section was updated to include power-up information.
- Table 2-11 • ProASIC 3 CCC/PLL Specification was updated.
- Figure 2-19 • Peak-to-Peak Jitter Definition is new.
- The "SRAM and FIFO" section was updated with operation and timing requirement information.
- The "RESET" section was updated with read and write information.
- The "RESET" section was updated with read and write information.
- The "Introduction" in the "Advanced I/Os" section was updated to include information on input and output buffers being disabled.
- PCI-X 3.3 V was added to Table 2-11 • VCCI Voltages and Compatible Standards.
- In the Table 2-15 • Levels of Hot-Swap Support, the ProASIC 3 compliance descriptions were updated for levels 3 and 4.
- Table 2-43 • I/O Hot-Swap and 5 V Input Tolerance Capabilities in ProASIC 3 Devices was updated.
- Notes 3, 4, and 5 were added to Table 2-17 • Comparison Table for 5 V–Compliant Receiver Scheme. 5 x 52.72 was changed to 52.7 and the Maximum current was updated from 4 x 52.7 to 5 x 52.7.
- The "VCCPLF PLL Supply Voltage" section was updated.
- The "VPUMP Programming Supply Voltage" section was updated.
- The "GL Globals" section was updated to include information about direct input into quadrant clocks.
- V_{JTAG} was deleted from the "TCK Test Clock" section.

© 2023 Microchip Technology Inc. and its subsidiaries

- In Table 2-22 • Recommended Tie-Off Values for the TCK and TRST Pins, TSK was changed to TCK in note 2. Note 3 was also updated.
- Ambient was deleted from Table 3-2 • Recommended Operating Conditions. VPUMP programming mode was changed from "3.0 to 3.6" to "3.15 to 3.45".
- Note 3 is new in Table 3-4 • Overshoot and Undershoot Limits (as measured on quiet I/Os)1.
- In EQ 3-2, 150 was changed to 110 and the result changed from 3.9 to 1.951.
- Table 3-6 • Temperature and Voltage Derating Factors for Timing Delays was updated.
- Table 3-5 • Package Thermal Resistivities was updated.
- Table 3-14 • Summary of Maximum and Minimum DC Input and Output Levels Applicable to Commercial and Industrial Conditions—Software Default Settings (Advanced) and Table 3-17 • Summary of Maximum and Minimum DC Input Levels Applicable to Commercial and Industrial Conditions (Standard Plus) were updated.
- Table 3-20 • Summary of I/O Timing Characteristics—Software Default Settings (Advanced) and Table 3-21 • Summary of I/O Timing Characteristics—Software Default Settings (Standard Plus) were updated.
- Table 3-11 • Different Components Contributing to Dynamic Power Consumption in ProASIC 3 Devices was updated.
- Table 3-24 • I/O Output Buffer Maximum Resistances1 (Advanced) and Table 3-25 • I/O Output Buffer Maximum Resistances1 (Standard Plus) were updated.
- Table 3-17 • Summary of Maximum and Minimum DC Input Levels Applicable to Commercial and Industrial Conditions was updated.
- Table 3-28 • I/O Short Currents IOSH/IOSL (Advanced) and Table 3-29 • I/O Short Currents IOSH/IOSL (Standard Plus) were updated.
- The note in Table 3-32 • I/O Input Rise Time, Fall Time, and Related I/O Reliability was updated.
- Figure 3-33 • Write Access After Write onto Same Address, Figure 3-34 • Read Access After Write onto Same Address, and Figure 3-35 • Write Access After Read onto Same Address are new.
- Figure 3-43 • Timing Diagram was updated.
- Ambient was deleted from the "Speed Grade and Temperature Grade Matrix".
- Notes were added to the package diagrams identifying if they were top or bottom view.
- The A3P030 "132-Pin QFN" table is new.
- The A3P060 "132-Pin QFN" table is new.
- The A3P125 "132-Pin QFN" table is new.
- The A3P250 "132-Pin QFN" table is new.
- The A3P030 "100-Pin VQFP" table is new.

A.27 Revision 0.7 - 01/2007

The following is the summary of changes in revision 0.7 of the document:

- In the "I/Os Per Package" table, the I/O numbers were added for A3P060, A3P125, and A3P250. The A3P030-VQ100 I/O was changed from 79 to 77

A.28 Revision 0.6 - 04/2006

The following is the summary of changes in revision 0.6 of the document:

- The term flow-through was changed to pass-through.
- Table 1 was updated to include the QN132.
- The "I/Os Per Package" table was updated with the QN132. The footnotes were also updated. The A3P400-FG144 I/O count was updated.
- "Automotive ProASIC 3 Ordering Information" was updated with the QN132.
- "Temperature Grade Offerings" was updated with the QN132.
- B-LVDS and M-LDVS are new I/O standards added to the datasheet.
- The term flow-through was changed to pass-through.
- Figure 2-7 • Efficient Long-Line Resources was updated.
- The footnotes in Figure 2-15 • Clock Input Sources Including CLKBUF, CLKBUF_LVDS/LVPECL, and CLKINT were updated.

- The Delay Increments in the Programmable Delay Blocks specification in Figure 2-24 • ProASIC 3E CCC Options.
- The "SRAM and FIFO" section was updated.
- The "RESET" section was updated.
- The "WCLK and RCLK" section was updated.
- The "RESET" section was updated.
- The "RESET" section was updated.
- The "Introduction" of the "Advanced I/Os" section was updated.
- The "I/O Banks" section is new. This section explains the following types of I/Os:
  - Advanced
    Standard+
    Standard
- Table 2-12 • Automotive ProASIC 3 Bank Types Definition and Differences is new. This table describes the standards listed above.
- PCI-X 3.3 V was added to the Compatible Standards for 3.3 V in Table 2-11 • VCCI Voltages and Compatible Standards
- Table 2-13 • ProASIC 3 I/O Features was updated.
- The "Double Data Rate (DDR) Support" section was updated to include information concerning implementation of the feature.
- The "Electrostatic Discharge (ESD) Protection" section was updated to include testing information.
- Level 3 and 4 descriptions were updated in Table 2-43 • I/O Hot-Swap and 5 V Input Tolerance Capabilities in ProASIC 3 Devices.
- The notes in Table 2-43 • I/O Hot-Swap and 5 V Input Tolerance Capabilities in ProASIC 3 Devices were updated.
- The "Simultaneous Switching Outputs (SSOs) and Printed Circuit Board Layout" section is new.
- A footnote was added to Table 2-14 • Maximum I/O Frequency for Single-Ended and Differential I/Os in All Banks in Automotive ProASIC 3 Devices (maximum drive strength and high slew selected).
- Table 2-18 • Automotive ProASIC 3 I/O Attributes vs. I/O Standard Applications
- Table 2-50 • ProASIC 3 Output Drive (OUT_DRIVE) for Standard I/O Bank Type (A3P030 device)
- Table 2-51 • ProASIC 3 Output Drive for Standard+ I/O Bank Type was updated.
- Table 2-54 • ProASIC 3 Output Drive for Advanced I/O Bank Type was updated.
- The "x" was updated in the "User I/O Naming Convention" section.
- The "VCC Core Supply Voltage" pin description was updated.
- The "VMVx I/O Supply Voltage (quiet)" pin description was updated to include information concerning leaving the pin unconnected.
- The "VJTAG JTAG Supply Voltage" pin description was updated.
- The "VPUMP Programming Supply Voltage" pin description was updated to include information on what happens when the pin is tied to ground.
- The "I/O User Input/Output" pin description was updated to include information on what happens when the pin is unused.
- The "JTAG Pins" section was updated to include information on what happens when the pin is unused.
- The "Programming" section was updated to include information concerning serialization.
- The "JTAG 1532" section was updated to include SAMPLE/PRELOAD information.
- "DC and Switching Characteristics" chapter was updated with new information.
- The A3P060 "100-Pin VQFP" pin table was updated.
- The A3P125 "100-Pin VQFP" pin table was updated.
- The A3P060 "144-Pin TQFP" pin table was updated.
- The A3P125 "144-Pin TQFP" pin table was updated.
- The A3P125 "208-Pin PQFP" pin table was updated.
- The A3P400 "208-Pin PQFP" pin table was updated.
- The A3P060 "144-Pin FBGA" pin table was updated.
- The A3P125 "144-Pin FBGA" pin table is new.

© 2023 Microchip Technology Inc. and its subsidiaries

- The A3P400 "144-Pin FBGA" is new.
- The A3P400 "256-Pin FBGA" was updated.
- The A3P1000 "256-Pin FBGA" was updated.
- The A3P400 "484-Pin FBGA" was updated.
- The A3P1000 "484-Pin FBGA" was updated.
- The A3P250 "100-Pin VQFP*" pin table was updated.
- The A3P250 "208-Pin PQFP*" pin table was updated.
- The A3P1000 "208-Pin PQFP*" pin table was updated.
- The A3P250 "144-Pin FBGA*" pin table was updated.
- The A3P1000 "144-Pin FBGA*" pin table was updated.
- The A3P250 "256-Pin FBGA*" pin table was updated.
- The A3P1000 "256-Pin FBGA*" pin table was updated.
- The A3P1000 "484-Pin FBGA*" pin table was updated.

A.29 Revision 0.5 - 11/2005

The following is the summary of changes in revision 0.5 of the document:

- The "I/Os Per Package" table was updated for the following devices and packages:
- Device Package
  A3P250/M7ACP250VQ100
  A3P250/M7ACP250FG144
  A3P1000FG256

A.30 Revision 0.4

The following is the summary of changes in revision 0.4 of the document:

- M7 device information is new.
- The I/O counts in the "I/Os Per Package" table were updated.

A.31 Revision 0.3

The following is the summary of changes in revision 0.3 of the document:

- The "I/Os Per Package" table was updated.
- M7 device information is new.
- Table 2-4 • ProASIC 3 Globals/Spines/Rows by Device was updated to include the number or rows in each top or bottom spine.
- EXTFB was removed from Figure 2-24 • ProASIC 3E CCC Options.
- The "PLL Macro" section was updated. EXTFB information was removed from this section.
- The CCC Output Peak-to-Peak Period Jitter F_{CCC_OUT} was updated in Table 2-11 • ProASIC 3 CCC/PLL Specification
- EXTFB was removed from Figure 2-27 • CCC/PLL Macro.
- Table 2-13 • ProASIC 3 I/O Features was updated.
- The "Hot-Swap Support" section was updated.
- The "Cold-Sparing Support" section was updated.
- "Electrostatic Discharge (ESD) Protection" section was updated.
- The LVPECL specification in Table 2-43 • I/O Hot-Swap and 5 V Input Tolerance Capabilities in ProASIC 3 Devices was updated.
- In the Bank 1 area of Figure 2-72, VMV2 was changed to VMV1 and VCCIB2 was changed to VCC_IB1.
- The VJTAG and I/O pin descriptions were updated in the "Pin Descriptions" section.
- The "JTAG Pins" section was updated.
- "128-Bit AES Decryption" section was updated to include M7 device information.
- Table 3-6 was updated.
- Table 3-7 was updated.

- In Table 3-11, PAC4 was updated.
- Table 3-20 was updated.
- The note in Table 3-32 was updated.
- All Timing Characteristics tables were updated from LVTTL to Register Delays
- The Timing Characteristics for RAM4K9, RAM512X18, and FIFO were updated.
- F_{TCKMAX} was updated in Table 3-110.

A.32 Revision 0.2

The following is the summary of changes in revision 0.2 of the document:

- Figure 2-11 was updated.
- The "Clock Resources (VersaNets)" section was updated.
- The "VersaNet Global Networks and Spine Access" section was updated.
- The "PLL Macro" section was updated.
- Figure 2-27 was updated.
- Figure 2-20 was updated.
- Table 2-5 was updated.
- Table 2-6 was updated.
- The "FIFO Flag Usage Considerations" section was updated.
- Table 2-13 was updated.
- Figure 2-24 was updated.
- The "Cold-Sparing Support" section is new.
- Table 2-43 was updated.
- Table 2-18 was updated.
- Pin descriptions in the "JTAG Pins" section were updated.
- The "User I/O Naming Convention" section was updated.
- Table 3-7 was updated.
- The "Methodology" section was updated.
- Table 3-40 and Table 3-39 were updated.
- The A3P250 "100-Pin VQFP*" pin table was updated.
- The A3P250 "208-Pin PQFP*" pin table was updated.
- The A3P1000 "208-Pin PQFP*" pin table was updated.
- The A3P250 "144-Pin FBGA*" pin table was updated.
- The A3P1000 "144-Pin FBGA*" pin table was updated.
- The A3P250 "256-Pin FBGA*" pin table was updated.
- The A3P1000 "256-Pin FBGA*" pin table was updated.
- The A3P1000 "484-Pin FBGA*" pin table was updated.

© 2023 Microchip Technology Inc. and its subsidiaries

THE MICROCHIP WEBSITE

Microchip provides online support via our WWW site at www.microchip.com. This website is used as a means to make files and information easily available to customers. Accessible by using your favorite Internet browser, the website contains the following information:

- **Product Support** – Data sheets and errata, application notes and sample programs, design resources, user's guides and hardware support documents, latest software releases and archived software
- **General Technical Support** – Frequently Asked Questions (FAQ), technical support requests, online discussion groups, Microchip consultant program member listing
- **Business of Microchip** – Product selector and ordering guides, latest Microchip press releases, listing of seminars and events, listings of Microchip sales offices, distributors and factory representatives

CUSTOMER CHANGE NOTIFICATION SERVICE

Microchip's customer notification service helps keep customers current on Microchip products. Subscribers will receive e-mail notification whenever there are changes, updates, revisions or errata related to a specified product family or development tool of interest.

To register, access the Microchip website at www.microchip.com. Under "Support", click on "Customer Change Notification" and follow the registration instructions.

CUSTOMER SUPPORT

Users of Microchip products can receive assistance through several channels:

- Distributor or Representative
- Local Sales Office
- Field Application Engineer (FAE)
- Technical Support

Customers should contact their distributor, representative or Field Application Engineer (FAE) for support. Local sales offices are also available to help customers. A listing of sales offices and locations is included in the back of this document.

Technical support is available through the mail at: www.microchip.com/support

Note the following details of the code protection feature on Microchip products:

- Microchip products meet the specifications contained in their particular Microchip Data Sheet.
- Microchip believes that its family of products is secure when used in the intended manner, within operating specifications, and under normal conditions.
- Microchip values and aggressively protects its intellectual property rights. Attempts to breach the code protection features of Microchip product is strictly prohibited and may violate the Digital Millennium Copyright Act.
- Neither Microchip nor any other semiconductor manufacturer can guarantee the security of its code. Code protection does not mean that we are guaranteeing the product is "unbreakable" Code protection is constantly evolving. Microchip is committed to continuously improving the code protection features of our products.

This publication and the information herein may be used only with Microchip products, including to design, test, and integrate Microchip products with your application. Use of this information in any other manner violates these terms. Information regarding device applications is provided only for your convenience and may be superseded by updates. It is your responsibility to ensure that your application meets with your specifications. Contact your local Microchip sales office for additional support or, obtain additional support at https://www.microchip.com/en-us/support/design-help/client-support-services.

THIS INFORMATION IS PROVIDED BY MICROCHIP "AS IS". MICROCHIP MAKES NO REPRESENTATIONS OR WARRANTIES OF ANY KIND WHETHER EXPRESS OR IMPLIED, WRITTEN OR ORAL, STATUTORY OR OTHERWISE, RELATED TO THE INFORMATION INCLUDING BUT NOT LIMITED TO ANY IMPLIED WARRANTIES OF NON-INFRINGEMENT, MERCHANTABILITY, AND FITNESS FOR A PARTICULAR PURPOSE, OR WARRANTIES RELATED TO ITS CONDITION, QUALITY, OR PERFORMANCE.

IN NO EVENT WILL MICROCHIP BE LIABLE FOR ANY INDIRECT, SPECIAL, PUNITIVE, INCIDENTAL, OR CONSEQUENTIAL LOSS, DAMAGE, COST, OR EXPENSE OF ANY KIND WHATSOEVER RELATED TO THE INFORMATION OR ITS USE, HOWEVER CAUSED, EVEN IF MICROCHIP HAS BEEN ADVISED OF THE POSSIBILITY OR THE DAMAGES ARE FORESEEABLE. TO THE FULLEST EXTENT ALLOWED BY LAW, MICROCHIP'S TOTAL LIABILITY ON ALL CLAIMS IN ANY WAY RELATED TO THE INFORMATION OR ITS USE WILL NOT EXCEED THE AMOUNT OF FEES, IF ANY, THAT YOU HAVE PAID DIRECTLY TO MICROCHIP FOR THE INFORMATION.

Use of Microchip devices in life support and/or safety applications is entirely at the buyer's risk, and the buyer agrees to defend, indemnify and hold harmless Microchip from any and all damages, claims, suits, or expenses resulting from such use. No licenses are conveyed, implicitly or otherwise, under any Microchip intellectual property rights unless otherwise stated.

For information regarding Microchip's Quality Management Systems, please visit www.microchip.com/quality.

Trademarks

The Microchip name and logo, the Microchip logo, Adaptec, AVR, AVR logo, AVR Freaks, BesTime, BitCloud, CryptoMemory, CryptoRF, dsPIC, flexPWR, HELDO, IGLOO, JukeBlox, KeeLoq, Kleer, LANCheck, LinkMD, maXStylus, maXTouch, MediaLB, megaAVR, Microsemi, Microsemi logo, MOST, MOST logo, MPLAB, OptoLyzer, PIC, picoPower, PICSTART, PIC32 logo, PolarFire, Prochip Designer, QTouch, SAM-BA, SenGenuity, SpyNIC, SST, SST Logo, SuperFlash, Symmetricom, SyncServer, Tachyon, TimeSource, tinyAVR, UNI/O, Vectron, and XMEGA are registered trademarks of Microchip Technology Incorporated in the U.S.A. and other countries.

AgileSwitch, APT, ClockWorks, The Embedded Control Solutions Company, EtherSynch, Flashtec, Hyper Speed Control, HyperLight Load, Libero, motorBench, mTouch, Powermite 3, Precision Edge, ProASIC, ProASIC Plus, ProASIC Plus logo, Quiet-Wire, SmartFusion, SyncWorld, Temux, TimeCesium, TimeHub, TimePictra, TimeProvider, TrueTime, and ZL are registered trademarks of Microchip Technology Incorporated in the U.S.A.

Adjacent Key Suppression, AKS, Analog-for-the-Digital Age, Any Capacitor, AnyIn, AnyOut, Augmented Switching, BlueSky, BodyCom, Clockstudio, CodeGuard, CryptoAuthentication, CryptoAutomotive, CryptoCompanion, CryptoController, dsPICDEM, dsPICDEM.net, Dynamic Average Matching, DAM, ECAN, Espresso T1S, EtherGREEN, GridTime, IdealBridge, In-Circuit Serial Programming, ICSP, INICnet, Intelligent Paralleling, IntelliMOS, Inter-Chip Connectivity, JitterBlocker, Knob-on-Display, KoD, maxCrypto, maxView, memBrain, Mindi, MiWi, MPASM, MPF, MPLAB Certified logo, MPLIB, MPLINK, MultiTRAK, NetDetach, Omniscient Code Generation, PICDEM, PICDEM.net, PICkit, PICtail, PowerSmart, PureSilicon, QMatrix, REAL ICE, Ripple Blocker, RTAX, RTG4, SAM-ICE, Serial Quad I/O, simpleMAP, SimpliPHY, SmartBuffer, SmartHLS, SMART-I.S., storClad, SQI, SuperSwitcher, SuperSwitcher II, Switchtec, SynchroPHY, Total Endurance, Trusted Time, TSHARC, USBCheck, VariSense, VectorBlox, VeriPHY, ViewSpan, WiperLock, XpressConnect, and ZENA are trademarks of Microchip Technology Incorporated in the U.S.A. and other countries.

SQTP is a service mark of Microchip Technology Incorporated in the U.S.A.

The Adaptec logo, Frequency on Demand, Silicon Storage Technology, and Symmcom are registered trademarks of Microchip Technology Inc. in other countries.

GestIC is a registered trademark of Microchip Technology Germany II GmbH & Co. KG, a subsidiary of Microchip Technology Inc., in other countries.

All other trademarks mentioned herein are property of their respective companies.

© 2023, Microchip Technology Incorporated and its subsidiaries.

All Rights Reserved.

ISBN:978-1-6683-1799-0

Worldwide Sales and Service

AMERICAS

Corporate Office
2355 West Chandler Blvd.
Chandler, AZ 85224-6199
Tel: 480-792-7200
Fax: 480-792-7277
Technical Support:
http://www.microchip.com/support
Web Address:
www.microchip.com

Atlanta
Duluth, GA
Tel: 678-957-9614
Fax: 678-957-1455

Austin, TX
Tel: 512-257-3370

Boston
Westborough, MA
Tel: 774-760-0087
Fax: 774-760-0088

Chicago
Itasca, IL
Tel: 630-285-0071
Fax: 630-285-0075

Dallas
Addison, TX
Tel: 972-818-7423
Fax: 972-818-2924

Detroit
Novi, MI
Tel: 248-848-4000

Houston, TX
Tel: 281-894-5983

Indianapolis
Noblesville, IN
Tel: 317-773-8323
Fax: 317-773-5453
Tel: 317-536-2380

Los Angeles
Mission Viejo, CA
Tel: 949-462-9523
Fax: 949-462-9608
Tel: 951-273-7800

Raleigh, NC
Tel: 919-844-7510

New York, NY
Tel: 631-435-6000

San Jose, CA
Tel: 408-735-9110
Tel: 408-436-4270

Canada - Toronto
Tel: 905-695-1980
Fax: 905-695-2078

ASIA/PACIFIC

Australia - Sydney
Tel: 61-2-9868-6733

China - Beijing
Tel: 86-10-8569-7000

China - Chengdu
Tel: 86-28-8665-5511

China - Chongqing
Tel: 86-23-8980-9588

China - Dongguan
Tel: 86-769-8702-9880

China - Guangzhou
Tel: 86-20-8755-8029

China - Hangzhou
Tel: 86-571-8792-8115

China - Hong Kong SAR
Tel: 852-2943-5100

China - Nanjing
Tel: 86-25-8473-2460

China - Qingdao
Tel: 86-532-8502-7355

China - Shanghai
Tel: 86-21-3326-8000

China - Shenyang
Tel: 86-24-2334-2829

China - Shenzhen
Tel: 86-755-8864-2200

China - Suzhou
Tel: 86-186-6233-1526

China - Wuhan
Tel: 86-27-5980-5300

China - Xian
Tel: 86-29-8833-7252

China - Xiamen
Tel: 86-592-2388138

China - Zhuhai
Tel: 86-756-3210040

ASIA/PACIFIC

India - Bangalore
Tel: 91-80-3090-4444

India - New Delhi
Tel: 91-11-4160-8631

India - Pune
Tel: 91-20-4121-0141

Japan - Osaka
Tel: 81-6-6152-7160

Japan - Tokyo
Tel: 81-3-6880- 3770

Korea - Daegu
Tel: 82-53-744-4301

Korea - Seoul
Tel: 82-2-554-7200

Malaysia - Kuala Lumpur
Tel: 60-3-7651-7906

Malaysia - Penang
Tel: 60-4-227-8870

Philippines - Manila
Tel: 63-2-634-9065

Singapore
Tel: 65-6334-8870

Taiwan - Hsin Chu
Tel: 886-3-577-8366

Taiwan - Kaohsiung
Tel: 886-7-213-7830

Taiwan - Taipei
Tel: 886-2-2508-8600

Thailand - Bangkok
Tel: 66-2-694-1351

Vietnam - Ho Chi Minh
Tel: 84-28-5448-2100

EUROPE

Austria - Wels
Tel: 43-7242-2244-39
Fax: 43-7242-2244-393

Denmark - Copenhagen
Tel: 45-4485-5910
Fax: 45-4485-2829

Finland - Espoo
Tel: 358-9-4520-820

France - Paris
Tel: 33-1-69-53-63-20
Fax: 33-1-69-30-90-79

Germany - Garching
Tel: 49-8931-9700

Germany - Haan
Tel: 49-2129-3766400

Germany - Heilbronn
Tel: 49-7131-72400

Germany - Karlsruhe
Tel: 49-721-625370

Germany - Munich
Tel: 49-89-627-144-0
Fax: 49-89-627-144-44

Germany - Rosenheim
Tel: 49-8031-354-560

Israel - Ra'anana
Tel: 972-9-744-7705

Italy - Milan
Tel: 39-0331-742611
Fax: 39-0331-466781

Italy - Padova
Tel: 39-049-7625286

Netherlands - Drunen
Tel: 31-416-690399
Fax: 31-416-690340

Norway - Trondheim
Tel: 47-7288-4388

Poland - Warsaw
Tel: 48-22-3325737

Romania - Bucharest
Tel: 40-21-407-87-50

Spain - Madrid
Tel: 34-91-708-08-90
Fax: 34-91-708-08-91

Sweden - Gothenberg
Tel: 46-31-704-60-40

Sweden - Stockholm
Tel: 46-8-5090-4654

UK - Wokingham
Tel: 44-118-921-5800
Fax: 44-118-921-5820

© 2023 Microchip Technology Inc. and its subsidiaries