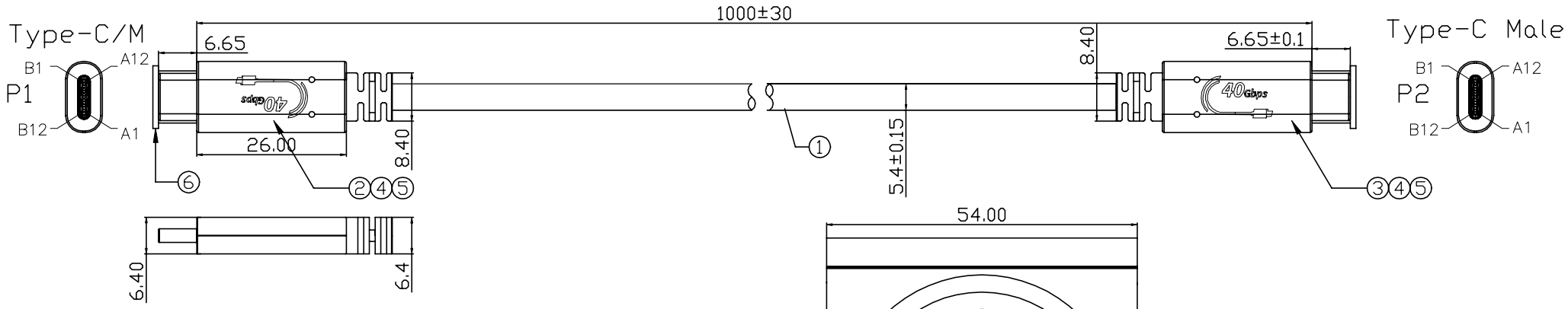

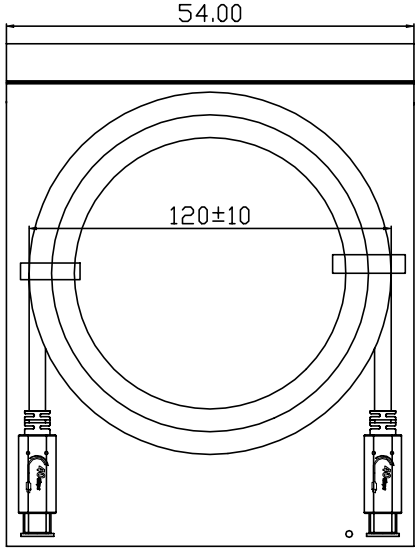

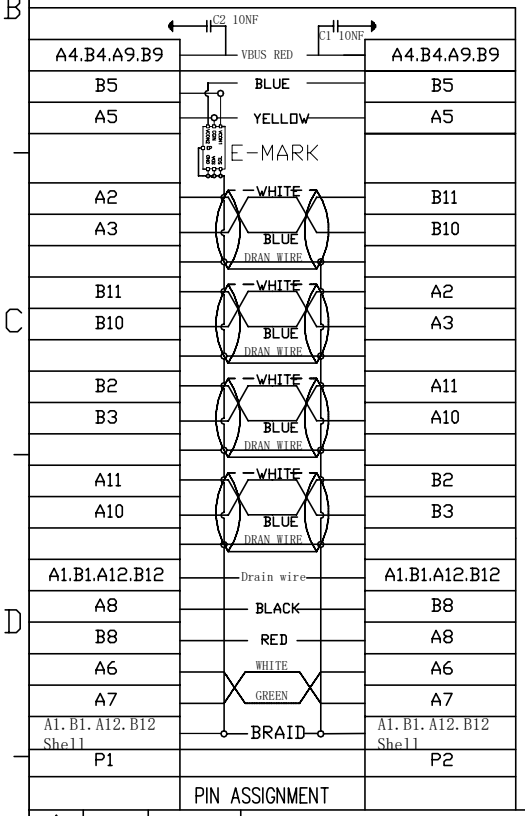

Electrical performance:
(1)、100% Open & Short Testing
(2)、Insulation impedance:≧10MΩ
(3)、DC high voltage: 300V,DC high voltage time: 0.01S
Leakage current ≤0.5mA
(4)、Conduction impedance:≤1Ω
(5)、Data transfer rate up to 40 Gbps4.
Display resolutionupto7680x4320@60 Hz

RoHS Compliant

ITEM	VENDOR	DESCRIPTION	Q'TY	UNIT
6	PE	PE,COLOR:TRANSPARENT	2.0	PCS
5	PVC	Black PVC,45P	0.0104	KG
4	PE	INNER MOLD: PE,COLOR:TRANSPARENT	0.0052	KG
3	COON	TYPE CM, 24pin,WithOut black insulation,pin Gold plated ,Shell Nickel plated.	1.0	PCS
2	CONN	TYPE CM, 24pin,With E-MARK IC.black insulation,pin Gold plated ,Shell Nickel plated	1.0	PCS
1	CABLE	30AWG(7/0.1TA*1PR+EAM)*4+30AWG(7/0.1TA)*1PR+30AWG(7/0.1TA)*4C+65/0.08TA*1C+AB85%外被PVC黑色D5.4MM	1000	MM

SYM	NAME	DATE	REVISIONS
4			
3			
2			
1			

长度公差	比例:	DRAWN BY	CHECKED BY	APPROVED BY
x.±0.5 .x±0.3 .xx±0.1	FREE			
角度公差 X°±3 .X°±1	单位:mm 版本:1.0	WANG 09/22.25	WANG 09/22.25	KENY 09/22.25

DESCRIPTION: USB 3.2Gen 2*1 CABLE

SHEET: 1 OF 1

群翰電子有限公司 CviLux Corporation

DRAWING No.	CviLux P/N	CUST. CODE
D000808A	DH-25UE0804	CUSTOMER P/N