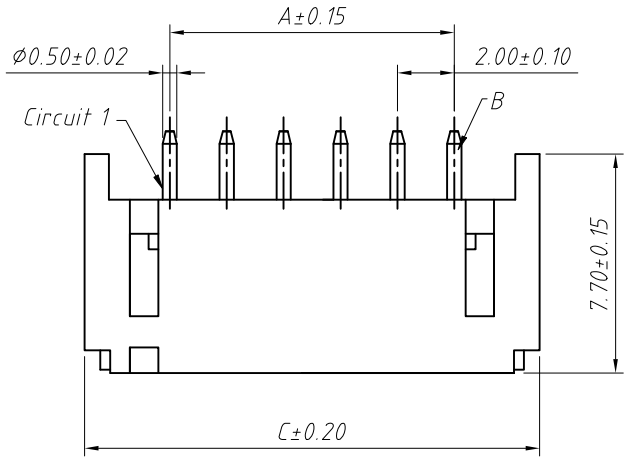

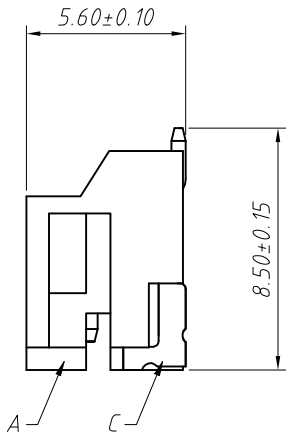

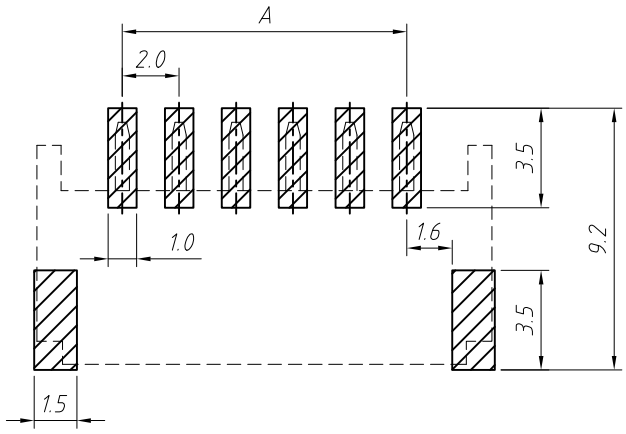

Suggested PCB Layout

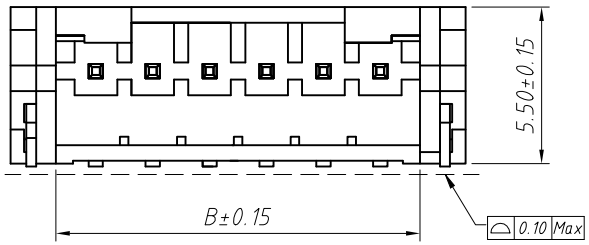

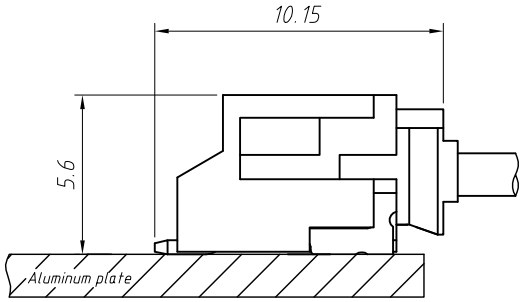

Assembly Layout

Circuit	Dimensions(mm)		
	A	B	C
02	2.00	4.75	8.00
03	4.00	6.75	10.00
04	6.00	8.75	12.00
05	8.00	10.75	14.00
06	10.00	12.75	16.00
07	12.00	14.75	18.00
08	14.00	16.75	20.00
09	16.00	18.75	22.00
10	18.00	20.75	24.00
11	20.00	22.75	26.00
12	22.00	24.75	28.00
13	24.00	26.75	30.00
14	26.00	28.75	32.00
15	28.00	30.75	34.00
16	30.00	32.70	36.00

Material:
Insulator:LCP UL 94V-0,Beige
Contacts:Brass, Tin Plated
SolderTab:Brass, Tin Plated
Electrical Specification:
Poles: 02 to 16
Contact resistance:≤20mΩ
Insulation resistance:≥1000MΩ
Rated voltage:250V AC DC
Rated current:2.0A AC DC
Withstand Voltage:1000V AC/minute
Temperature Range:-25℃~ +105℃
Packing:R=Reel

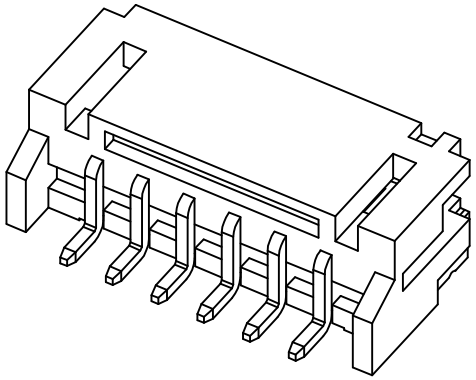

GENERAL TOLERANCE	PROJECTION		Description:
X. ±0.30	UNITS	mm	Ptich 2.00mm Horizontal SMT Wafer
.X ±0.20	SCALE	1:1	
.XX ±0.10	Draw by:	Jenny	P/N: WS02DH-CT-TR
ANGLE TOLERANCE	Check by:		CONNTHERM
X. ±5°	Date	2018-03-01	
.X ±3°			
.XX ±2°	SHEET	1 OF 1	

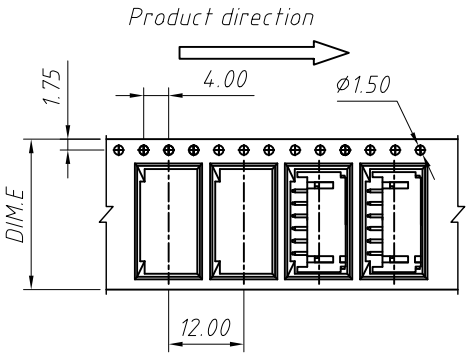

02~06 Contacts

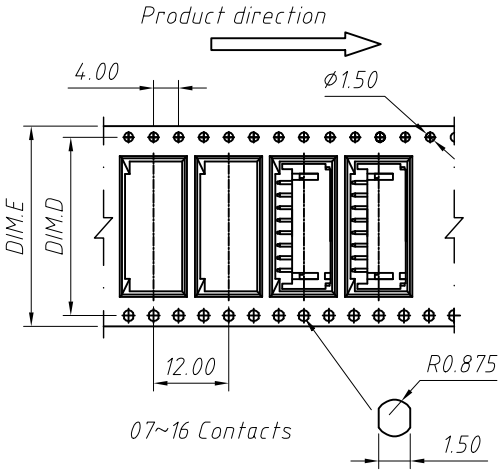

07~16 Contacts

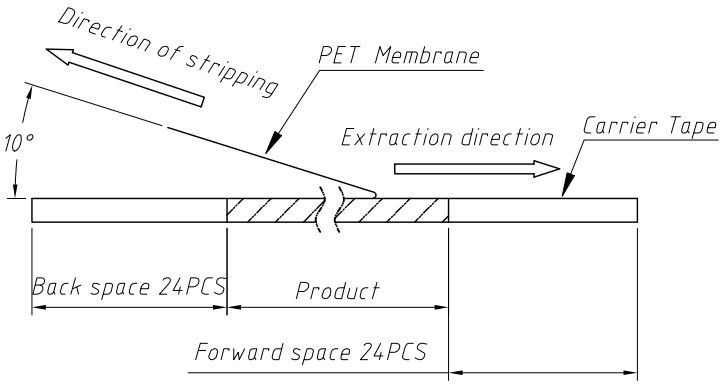

PET Membrane Schematic diagram of strippin

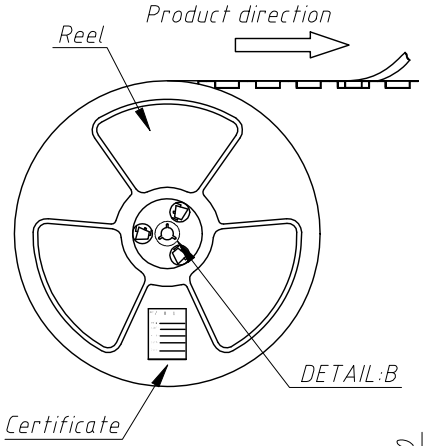

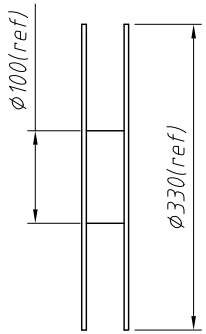

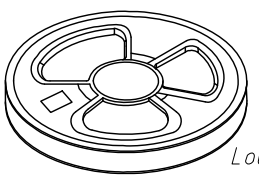

Loading × Disk (Reference List 1)

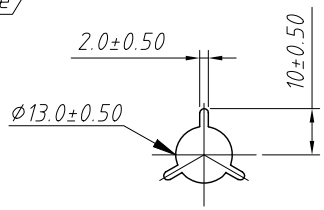

DETAIL:B

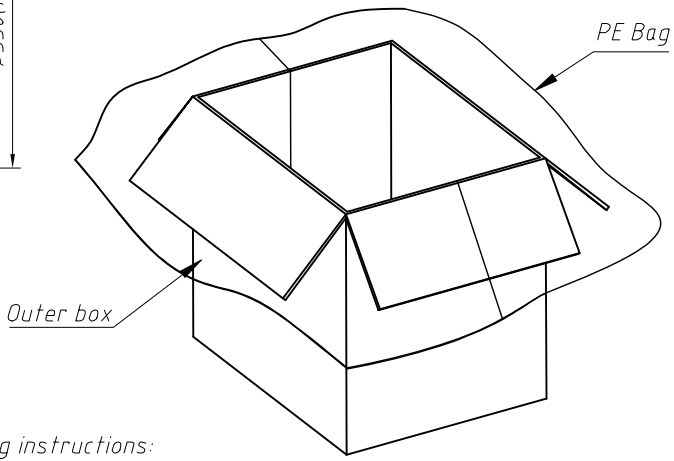

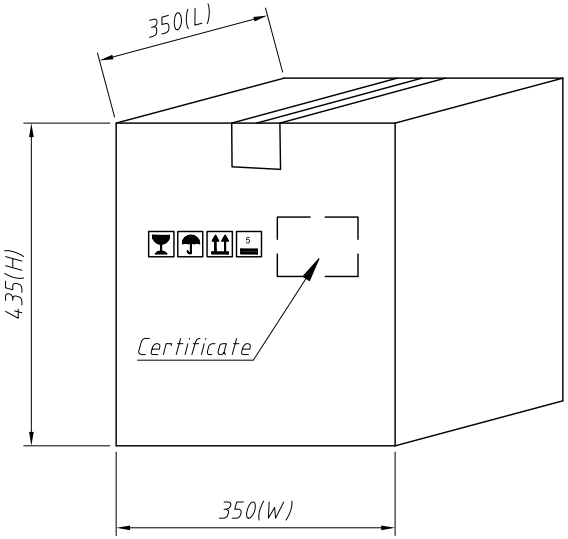

Circuits	DIM.D	DIM.E	Q'ty/Reel	Packing Reel/Caton
02-03 PIN	--	16	1000 PCS	20/Reel
04-06 PIN	--	24	1000 PCS	15/Reel
07-08 PIN	28.4	32	1000 PCS	11/Reel
09-14 PIN	40.4	44	1000 PCS	8/Reel
15-16 PIN	52.4	56	1000 PCS	6/Reel

Packaging instructions:
Pack the finished products into reels, each with 1000 PCS.
The product will be packed by pasting a certificate on the reel.
The reel is put into the outer box, and the outer box is fitted with one first.
Large PE bags with qualified certificates affixed on the outer case.

GENERAL TOLERANCE	PROJECTION		Description:	Packaging Specification
X. ±0.30	UNITS	mm		Ptich 2.00mm Horizontal SMT
.X ±0.20	SCALE	1:1		
.XX ±0.10	Draw by:	Jenny	P/N:	WS02DH-CT-TR
ANGLE TOLERANCE	Check by:			CONNTHERM
X. ±5°	Date	2018-03-01		
.X ±3° .XX ±2°	SHEET	1 OF 1		