REVISIONS					
REV	ECO	DESCRIPTION	DATE	BY	APPR
A1	--	RELEASED DRAWING	Dec-26-2016	Ben	Tommy
A2	--	UPDATE NOTES	Jul-06-2017	Nick	Tommy
A3	--	UPDATE DRAWING	Mar-21-2018	White	Tommy

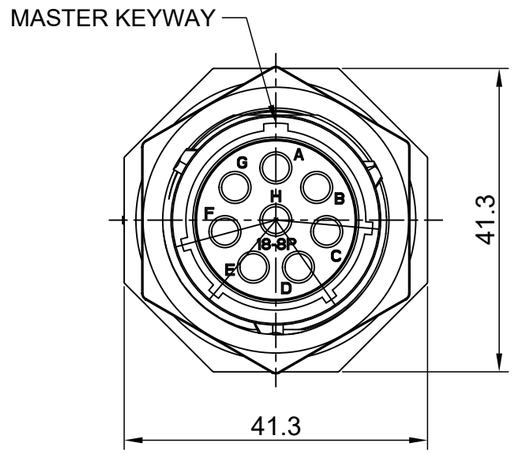

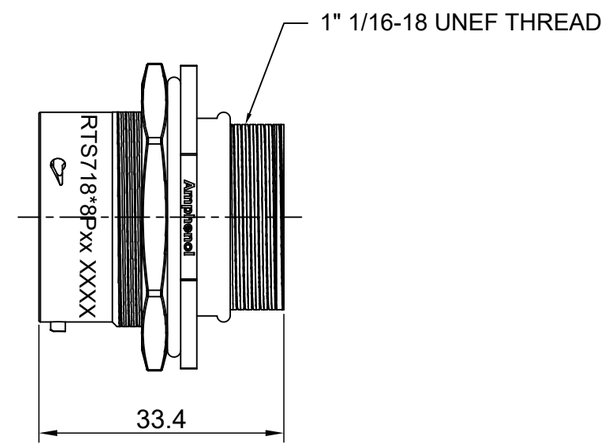

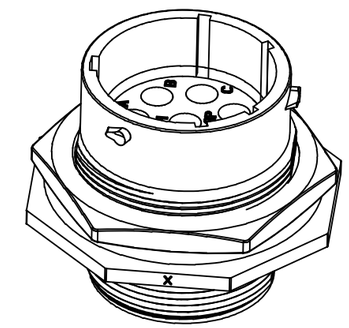

NOTES : (UNLESS OTHERWISE SPECIFIED)

1. MATERIAL :
   - SHELL : THERMOPLASTIC , UL94 V-0.
   - INSERT : THERMOPLASTIC , UL94 V-0.
   - O-RING : NBR/SILICONE RUBBER.
   - SEAL GASKET : NBR/SILICONE RUBBER.
   - JAM NUT : ALUMINIUM ALLOY , BLACK ANODIZING.
2. SPECIFICATIONS :
   - 2.1 RATED CURRENT : 23A MAX.
   - 2.2 RATED VOLTAGE : 500V(AC/DC).
   - 2.3 OPERATING TEMPERATURE : SEE TABLE.
   - 2.4 DIELECTRIC WITHSTANDING VOLTAGE : LESS THAN 2 MILLIAMPS CURRENT LEAKAGE@2000 VOLTS AC.
   - 2.5 INSULATION RESISTANCE : 5000 MEGOHMS MIN.
   - 2.6 IP--CLASS : IP67 AND IP69K IN THE MATED CONDITION, PANEL EXTERNAL.
   - 2.7 MATING CYCLES DURABILITY : 500 CYCLES MIN.
   - 2.8 RoHS COMPLIANT.
3. SUITABLE CONTACTS : 2.5MM CONTACT.
4. ALL DIMENSIONS ARE FOR REFERENCE USE ONLY.

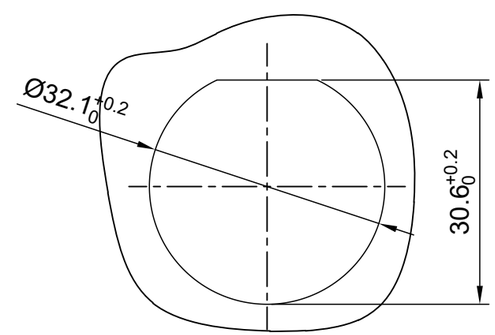

PANEL CUT OUT REFERENCE

KEY	PART NUMBER	
	-40°C ~ 105°C	-40°C ~ 125°C
N	RTS718N8P	RTS718N8P03

QUANTITY	PART NUMBER	DESCRIPTION	ITEM

MATERIALS LIST

UNLESS OTHERWISE SPECIFIED
1) All dimensions are in metric(mm).
2) Tolerances are as follows:
1 PL DEC ±0.30 | Fractions ±1/64
2 PL DEC ±0.15 | Angles ±1°
3 PL DEC ±0.08
3) Note reference = X

MATERIAL SPECIFICATIONS:

PROCESS SPECIFICATIONS:

NEXT ASS'Y:

SIGNATURES		DATE
DRAWN:	White	Mar-21-2018
CHECKED:	Tod	Mar-21-2018
ENGINEER:		
APPROVAL:	Tommy	Mar-21-2018
CUSTOMER:		

THIS DRAWING IS SUPPLIED FOR INFORMATION ONLY. DESIGN FEATURES, SPECIFICATIONS AND PERFORMANCE DATA SHOWN HEREON ARE THE PROPERTY OF THE AMPHENOL CORPORATION. NO RIGHTS OF REPRODUCTION ARE IMPLIED. ALL DIMENSIONS ARE SUBJECT TO NORMAL MANUFACTURING VARIATIONS.

Amphenol
Sine Systems - www.amphenol-sine.com
44724 Morley Drive
Clinton Township, MI 48036

ECO-MATE,RECEPTACLE, JAM NUT, SIZE 18,8POS,PIN.

SIZE	TYPE	DWG NO:	REVISION
B	C-	RTS718*8Pxx	A3

SCALE: NONE SHEET 1 OF 1

TITLE: ECO-MATE,RECEPTACLE,JAM NUT,SIZE 18,8POS,PIN.
DWG NO: RTS718*8Pxx
REV: A3
SH: 1
OF: 1