REVISIONS					
REV	ECO	DESCRIPTION	DATE	BY	APPR
B1	-	RELEASED DRAWING	JUN-18-2014	BEN	TOMMY

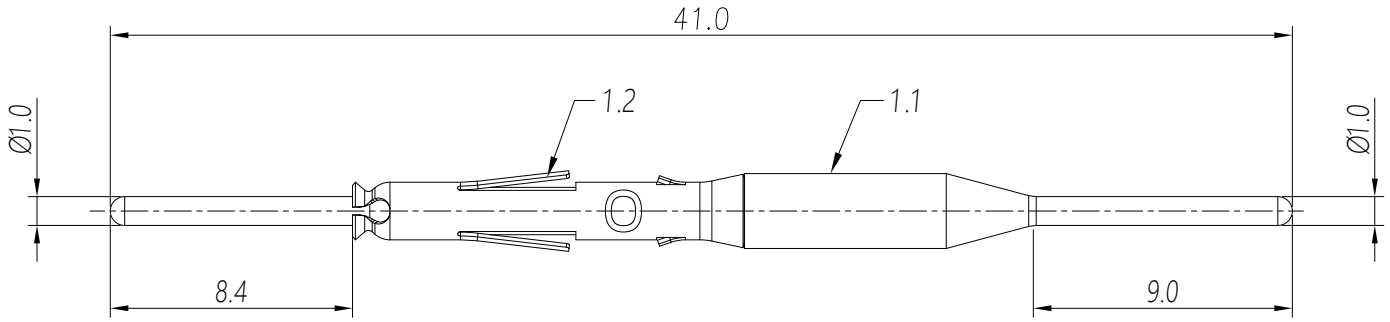

P/N	CONTACT PLATING(MATING AREA)
MP20W12E09F	GOLD FLASH PLATING OVER NICKEL.
MP20W12E09G5	5μ"GOLD PLATING OVER NICKEL.
MP20W12E09G10	10μ"GOLD PLATING OVER NICKEL.
MP20W12E09G15	15μ"GOLD PLATING OVER NICKEL.
MP20W12E09G30	30μ"GOLD PLATING OVER NICKEL.

NOTES: (UNLESS OTHERWISE SPECIFIED)
1. MATERIAL:
   1.1 CONTACT BODY: COPPER ALLOY.
   1.2 OUTER SPRING: STAINLESS STEEL.
2. SPECIFICATIONS:
   2.1 CURRENT RATING: 7.5A(MAX).
   2.2 TERMINATION TYPE: SOLDER.
3. SUITABLE SOCKET TYPE: MS20W23xx.
4. ROHS COMPLIANT.
5. ALL DIMENSIONS ARE FOR REFERENCE USE ONLY.

QUANTITY	PART NUMBER	DESCRIPTION	ITEM

MATERIALS LIST

UNLESS OTHERWISE SPECIFIED
1) All dimensions are in metric(mm).
2) Tolerances are as follows:
1 PL DEC ±0.30 | Fractions ±1/64
2 PL DEC ±0.15 | Angles ±1°
3 PL DEC ±0.08
3) Note reference = X

MATERIAL SPECIFICATIONS:

PROCESS SPECIFICATIONS:

NEXT ASSY:

SIGNATURES		DATE
DRAWN:	BEN	JUN-18-2014
CHECKED:		
ENGINEER:		
APPROVAL:		
CUSTOMER:		

THIS DRAWING IS SUPPLIED FOR INFORMATION ONLY. DESIGN FEATURES, SPECIFICATIONS AND PERFORMANCE DATA SHOWN HEREON ARE THE PROPERTY OF THE AMPHENOL CORPORATION. NO RIGHTS OF REPRODUCTION ARE IMPLIED. ALL DIMENSIONS ARE SUBJECT TO NORMAL MANUFACTURING VARIATIONS.

Amphenol
Sine Systems - www.amphenol-sine.com
44724 Morley Drive
Clinton Township, MI 48036

ECO-MATE,PIN CONTACT,
MACHINE,20#,DIP TYPE.

SIZE	TYPE	DWG NO:	REVISION
B	C-	MP20W12E09xx	B1

SCALE: NONE SHEET 1 OF 1

TITLE: ECO-MATE,PIN CONTACT,MACHINE,20#,DIP TYPE
DWG NO: MP20W12E09xx
REV: B1
SH: 1
OF: 1